Modular expandable power amplifier with TDA7293 / TDA7294

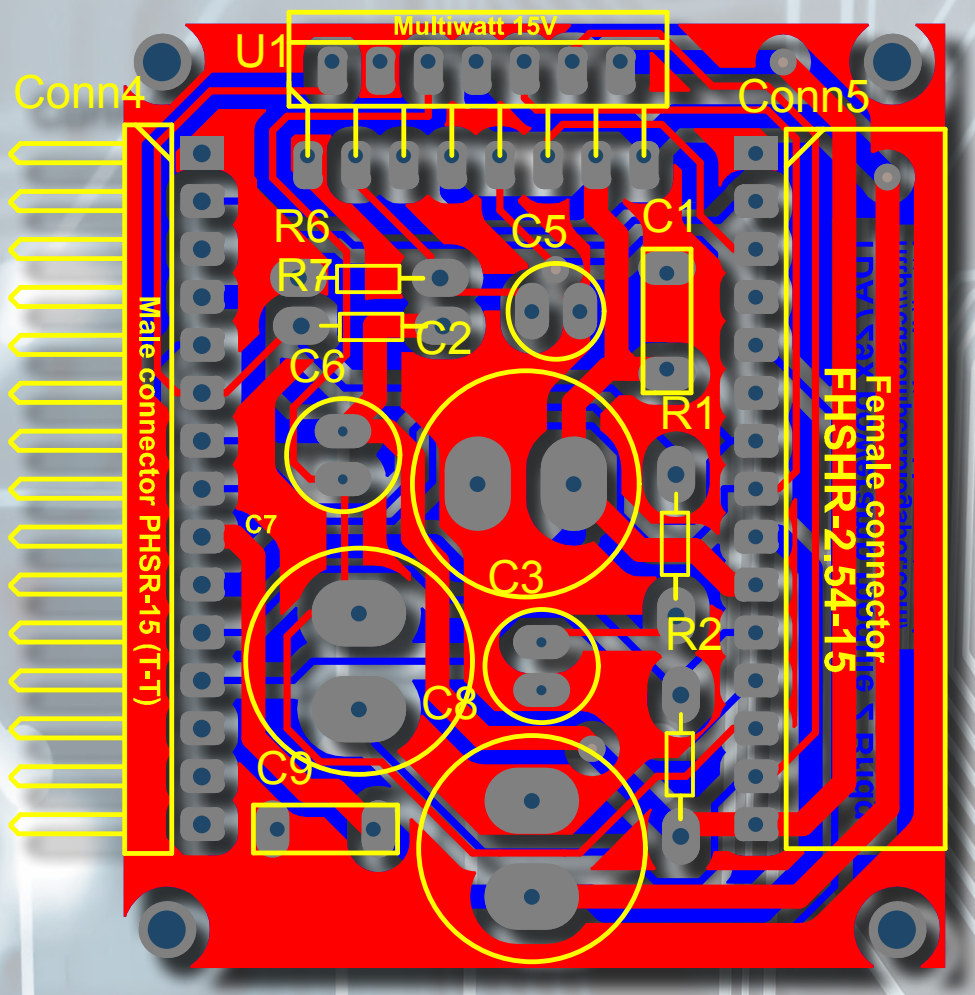

Schematics and BOM for modular TDA7293 amplifier

This project made for very simple and popular homemade amplifier instrument amplification. The gainclone called TDA7293 and 7294 is very good solution for guitar or microphone amplifiers. The poweramp can be connected to bridge, parallel, and bridge+parallel mode. This project contains 3 different PCBs for this integrated MOSFET amplifier, and one PCB for speaker protection. Very easy to build, the output power is from 75W to 300W with one channel, but with this project possible to build stereo application. Popular guitar amplifier makers like Marshall and Carlsbro using TDA729x ICs for combos and guitar heads.

English blog and PCB order: http://custompcb.blogspot.com/
Hungarian blog and PCB order: http://diyguitarpa.blogspot.com/
The Youtube Channel • Picasa gallery • Email: gitarfogas@gmail.com

Schematics and BOM for modular TDA7293 amplifier 2
Schematic and BOM of first (main) module 3
Schematic and BOM of second (bridge) module 4
Schematic and BOM of third (parallel) module 5
Schematic and BOM of speaker protection module 6
Three modes of TDA7293 from the official datasheet 7
Simplified schematic of bridged and paralleled modes 8
Connections between single, bridge and parallel modes 10
Variations between main, bridge, and parallel modules 12

PCB for modular expandable TDA amplifier project 13
PCB of main module 14
PCB of bridge module 15
PCB of parallel module 16
PCB of speaker protection module 17

Examples how to connect modules and build instrument amplifiers 18
Mono bridge, single and parallel, – stereo bridge and single amp 19
Stereo bridge + parallel, – mono bridge + doubled parallel amp with speaker protection 20

More power with parallel modules up to 800W 22
More power with 3 parallel modules 23
Speaker protection schematic with PWM fan controller V:1 25
Speaker protection PCB with PWM fan controller V:1 26
Speaker protection schematic with PWM fan controller V:2 27
Speaker protection PCB with PWM fan controller V:2 28

Schematics and Bill of materials for TDA amplifier

Schematic and BOM of first (main) module

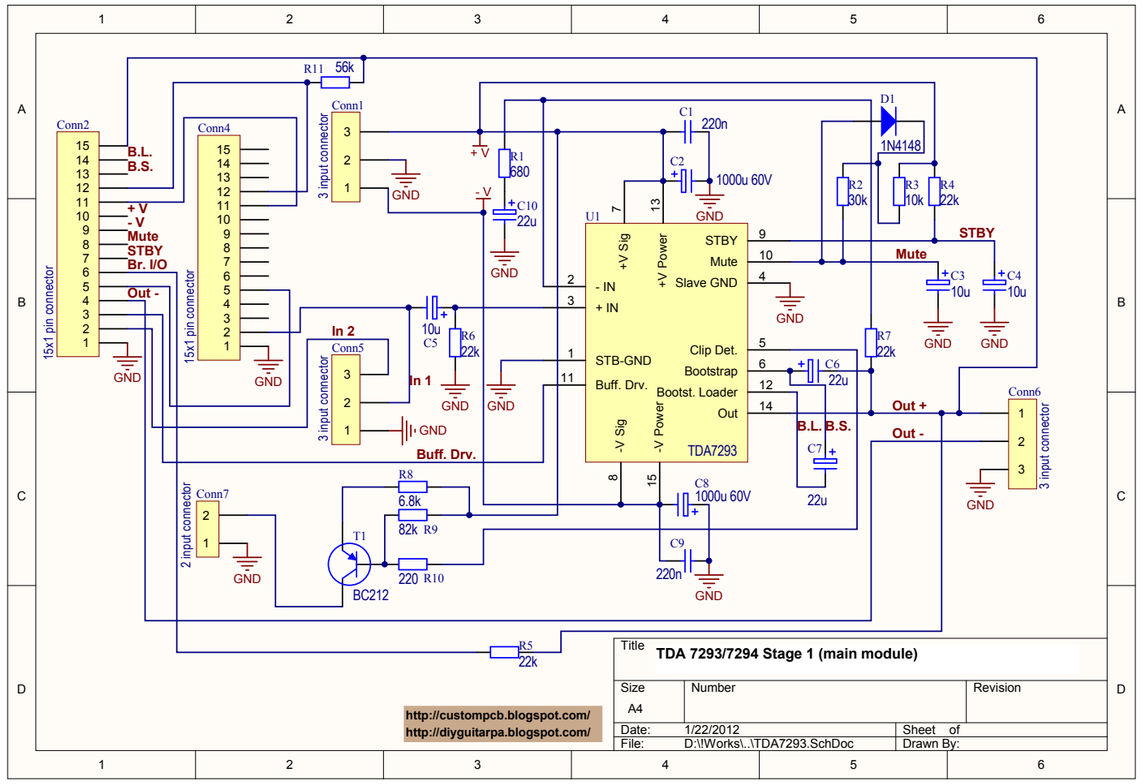

Bill of Materials

TDA7293.SchDoc 12/12/2011 16:20:00

Comment	Footprint	Value	Quantity	Pins	Designator
Connector	2 pin connector 100mil	2 input connector	1	2	Conn7
Cap	CAP, 2 and 3 MIL	22u	1	2	C7
Cap	Cap, Tantal, 1mil	10u	1	2	C5
NonPolarized Cap	CAP, WIMA, 2MIL	220n	2	2	C1, C9
Diode	Diode	1N4148	1	2	D1
Cap	Elco 12 mm, 2 mil pins	1000u 60V	2	2	C2, C8
Cap	Elco 6mm, 1 mil pins	10u	2	2	C3, C4
Cap	Elco 6mm, 1 mil pins	22u	2	2	C6, C10
Header 15 pin	Female connector FHSHR 15	15x1 pin connector	2	15	Conn2, Conn4
Connector	Panel Connector 3 input Small	3 input connector	3	3	Conn1, Conn5, Conn6
Resistor	Resistor 300mil	10k	1	2	R3
Resistor	Resistor 300mil	220	1	2	R10
Resistor	Resistor 300mil	22k	4	2	R4, R5, R6, R7
Resistor	Resistor 300mil	30k	1	2	R2
Resistor	Resistor 300mil	56k	1	2	R11
Resistor	Resistor 300mil	6.8k	1	2	R8
Resistor	Resistor 300mil	680	1	2	R1
Resistor	Resistor 300mil	82k	1	2	R9
TDA7293	TDA7293	TDA7293	1	15	U1
PNP Transistor	TO92	BC212	1	3	T1
			30		

Conn1: Power supply, ±47V for 7293, ±40V for 7294
Conn5: Left and Right audio level inputs
Conn7: Clipping LED connector
Conn6: Simple (GND and Out+) and bridge (Out+ and Out-) mode speaker outputs.

Notes

This is the first and the **most important module** of this project. **This module can be used alone for 1x75W or 2x75W amplification**. The commercial amplifiers says 100W for this circuit what is not true. The output power is 70–75w with 4 Ohm speakers, and about 40-50w with 8 Ohm speakers. **The maximum power supply is ±50V**, but ±47V recommended. The max. power of circuit called 7294 is ±40V, with the 7293 possible to use ±50V. If you need more power, don't increase the power supply, **use bridge or parallel configuration** instead. This module useful for both 7294 and 7293. Only one thing must be changed, the C6 and C7 capacitor. For 7294 use ONLY C6 between output and Bootstrap pin, for 7293 use ONLY C7 between pin 6 and pin 12. Use this rule for all other modules.

Schematics and Bill of materials for TDA amplifier

Schematic and BOM of second (bridge) module

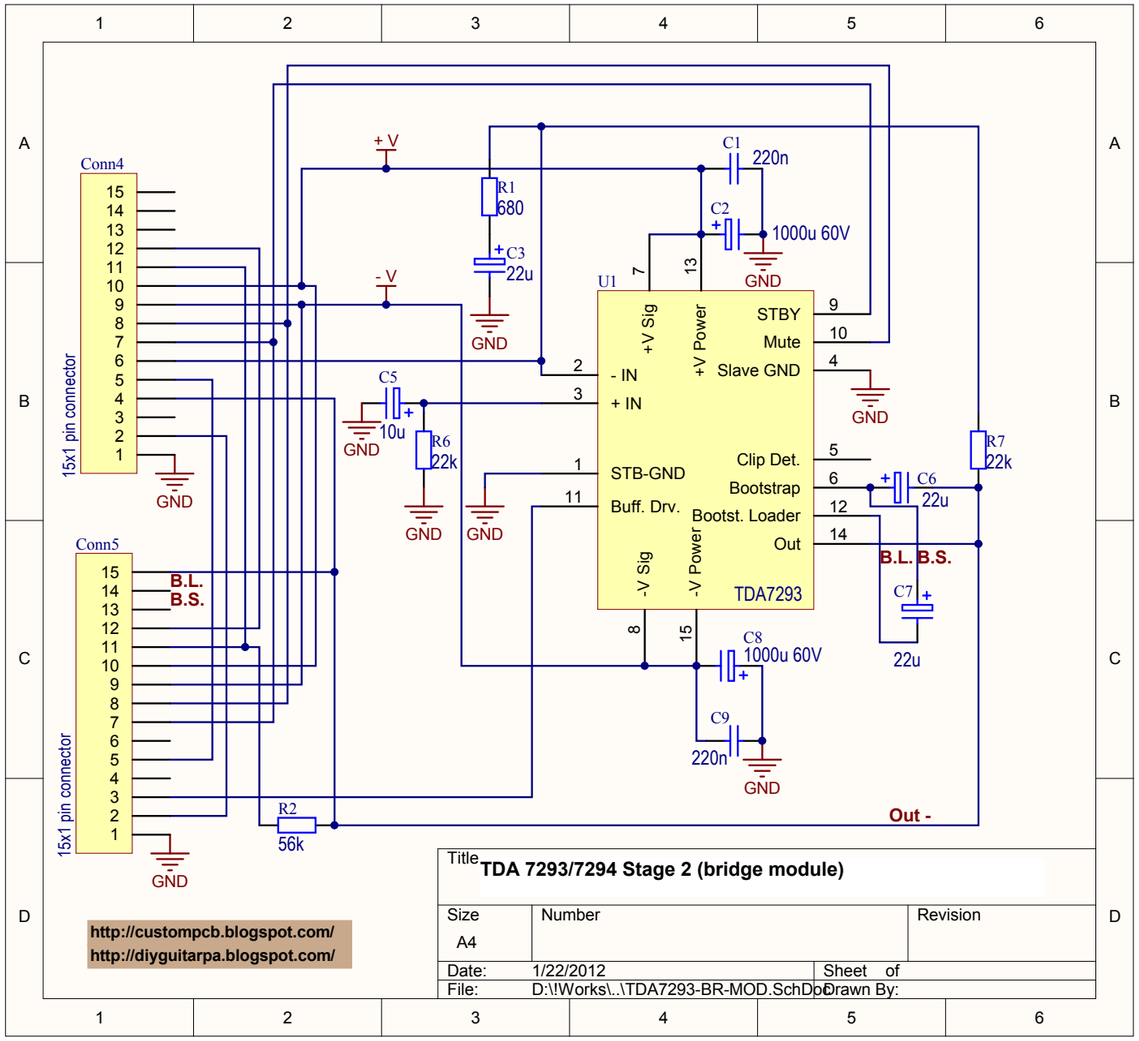

Bill of Materials

TDA7293-BR-MOD.SchDoc 12/12/2011 16:12:03

Comment	Footprint	Value	Quantity	Pins	Designator
Cap	CAP, 2 and 3 MIL	22u	1	2	C7
Cap	Cap, Tantal, 1mil	10u	1	2	C5
NonPolarized Cap	CAP, WIMA, 2MIL	220n	2	2	C1, C9
Cap	Elco 12 mm, 2 mil pins	1000u 60V	2	2	C2, C8
Cap	Elco 6mm, 1 mil pins	22u	2	2	C3, C6
Header 15 pin	Female connector FHSHR 15	15x1 pin connector	1	15	Conn5
Header 15 pin	Male connector PHSR-15 (T-T)	15x1 pin connector	1	15	Conn4
Resistor	Resistor 300mil	22k	2	2	R6, R7
Resistor	Resistor 300mil	56k	1	2	R2
Resistor	Resistor 300mil	680	1	2	R1
TDA7293	TDA7293	TDA7293	1	15	U1
			15		

Notes

This is the **bridge** module of this project. This module can be connected to the right side of first (main) circuit. This module duplicate the output power with 8 ohm speakers. 4 Ohm speakers cannot be used with bridge amplifier.

Schematics and Bill of materials for TDA amplifier

Schematic and BOM of third (parallel) module

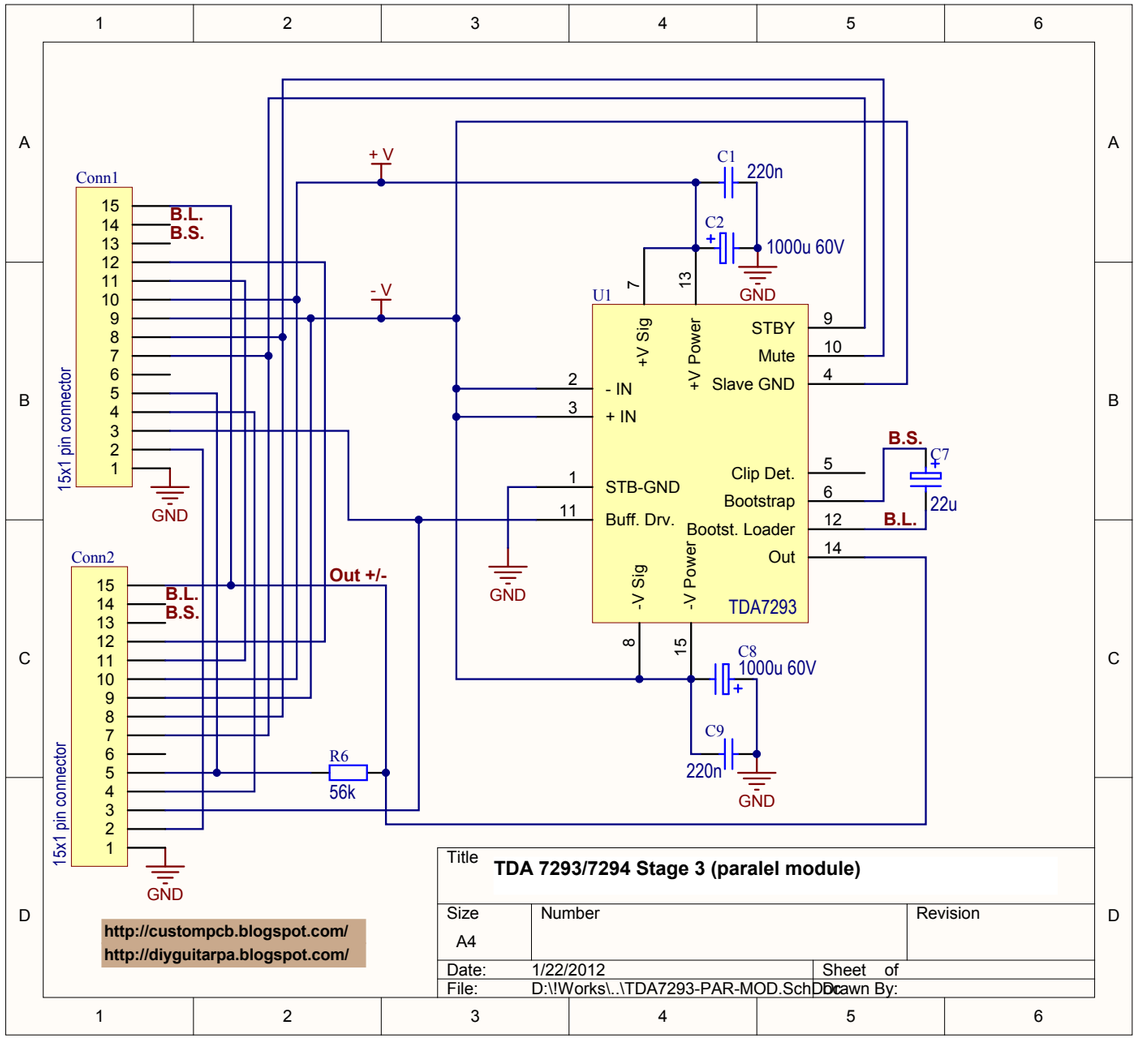

This module can be connected to the first (main) module, to the second (bridged) module, and if you need more power, can be connected to the first parallel module on the system to increase the output current.

Bill of Materials

TDA7293-PAR-MOD.SchDoc 12/12/2011 16:20:58

Comment	Footprint	Value	Quantity	Pins	Designator
Cap	CAP, 2 and 3 MIL	22u	1	2	C7
NonPolarized Cap	CAP, WIMA, 2MIL	220n	2	2	C1, C9
Cap	Elco 12 mm, 2 mil pins	1000u 60V	2	2	C2, C8
Header 15 pin	Female connector FHSHR 15	15x1 pin connector	1	15	Conn2
Header 15 pin	Male connector PHSR-15 (T-T)	15x1 pin connector	1	15	Conn1
Resistor	Resistor 300mil	56k	1	2	R6
TDA7293	TDA7293	TDA7293	1	15	U1
			9		

Notes

This is the **parallel** module of this amplifier project. This mode can be connected to the right side of first (main) module to use with 4 ohm speakers, or can be connected to the second (bridge) module to use bridged amp with 4 ohm too. For parallel amplification use only TDA7293 only.

Schematics and Bill of materials for TDA amplifier

Schematic and BOM of speaker protection module

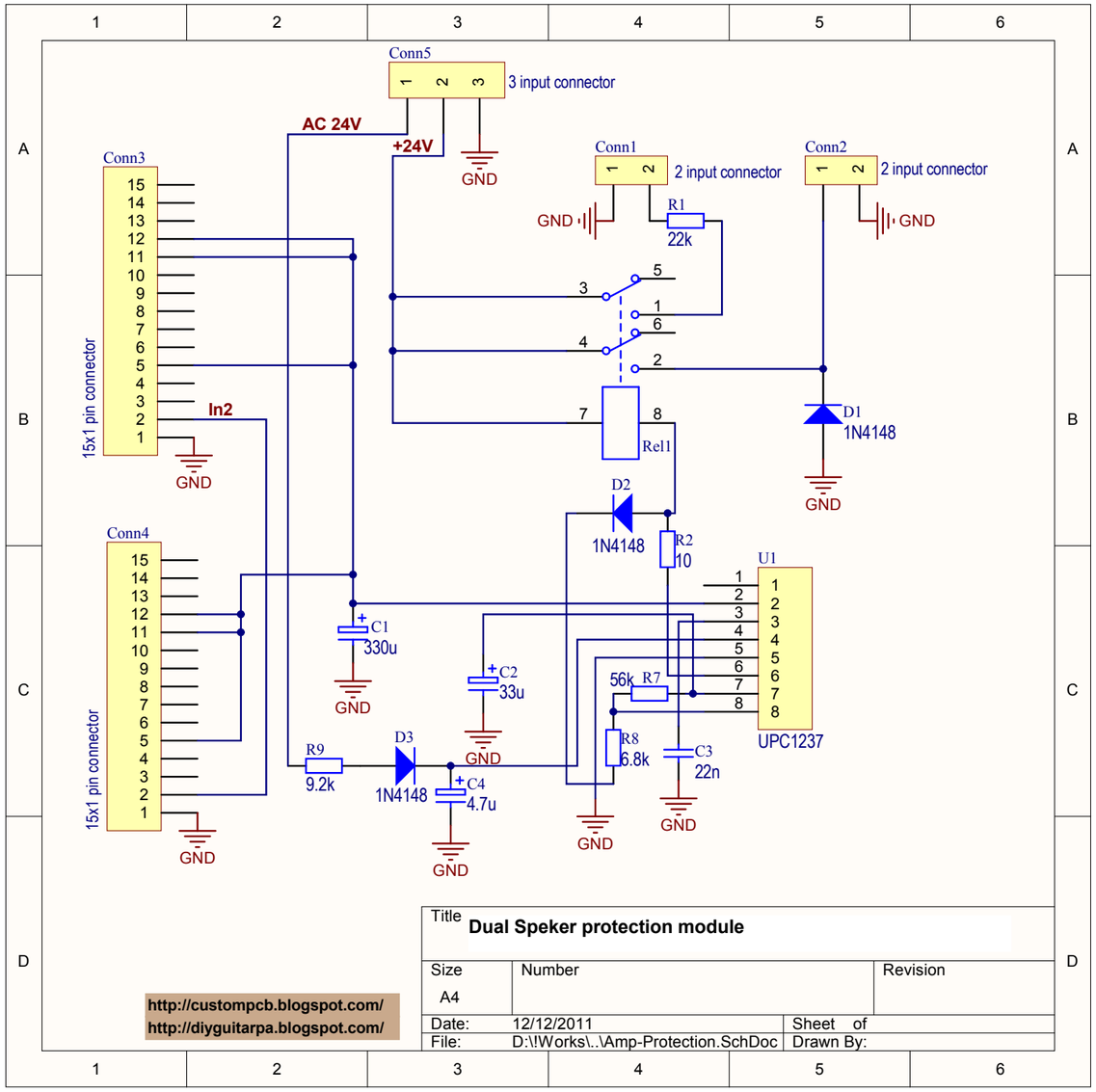

Bill of Materials

Amp-Protection.SchDoc		12/12/2011			16:18:00
Comment	**Footprint**	**Value**	**Quantity**	**Pins**	**Designator**
Connector	2 pin connector 100mil	2 input connector	1	2	Conn1
NonPolarized Cap	CAP, Ceramic, 1MIL	22n	1	2	C3
Diode	Diode	1N4148	3	2	D1, D2, D3
Cap	Elco 12 mm, 2 mil pins	330u	1	2	C1
Cap	Elco 6mm, 1 mil pins	33u	1	2	C2
Cap	Elco 6mm, 1 mil pins	4.7u	1	2	C4
Header 15 pin	Male connector PHSR-15 (T-T)	15x1 pin connector	2	15	Conn3, Conn4
Connector	Panel Connector 2 input Small	2 input connector	1	2	Conn2
Connector	Panel Connector 3 input Small	3 input connector	1	3	Conn5
Relay 2	Relay RE2L 24V DC		1	8	Rel1
Resistor	Resistor 300mil	10	1	2	R2
Resistor	Resistor 300mil	22k	1	2	R1
Resistor	Resistor 300mil	56k	1	2	R7
Resistor	Resistor 300mil	6.8k	1	2	R8
Resistor	Resistor 300mil	9.2k	1	2	R9
UPC1237	UPC1237		1	8	U1
			19		

Notes

This is very simple and optional module for all configuration of this amplifier project. This module possible to use for all one channel mono and all two channels stereo configurations. **This module (if used) must be connected between left and right channels**. Connect the left side connector of speaker protection to the last module of left channel, connect right side connector to the first module of the main module of right channel. The **Conn5** is used for 24V DC power, and for 24V AC input of UPC1237. **Conn1** is the LED connector for protection checking. **Conn2** is for the high current relays, connect or disconnect the speakers from speaker outputs.

Schematics and Bill of materials for TDA amplifier

Three modes of TDA7293 from the official datasheet

Simple 7293 or 7294:

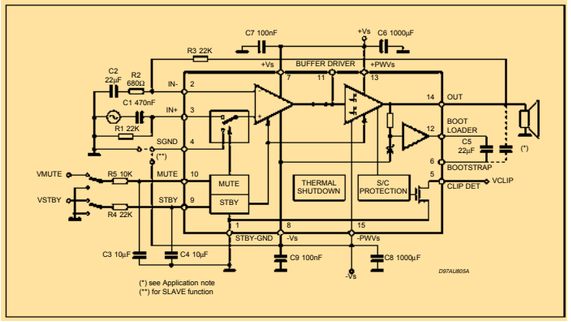

For 7293:

QUICK REFERENCE DATA

Symbol	Parameter	Test Conditions	Min.	Typ.	Max.	Unit
V_S	Supply Voltage Operating		±12		æ 50	V
G_{LOOP}	Closed Loop Gain		26		40	dB
P_{tot}	Output Power	V_S = ±45V; R_L = 8Ω; THD = 10%		140		W
		V_S = ±30V; R_L = 4Ω; THD = 10%		110		W
SVR	Supply Voltage Rejection			75		dB

ABSOLUTE MAXIMUM RATINGS

Symbol	Parameter	Value	Unit
V_S	Supply Voltage (No Signal)	±60	V

For 7294:

ABSOLUTE MAXIMUM RATINGS

Symbol	Parameter	Value	Unit
V_S	Supply Voltage (No Signal)	±50	V
I_O	Output Peak Current	10	A
P_{tot}	Power Dissipation T_{case} = 70°C	50	W
T_{op}	Operating Ambient Temperature Range	0 to 70	°C
T_{stg}, T_j	Storage and Junction Temperature	150	°C

Bridge with 7293 and 7294:

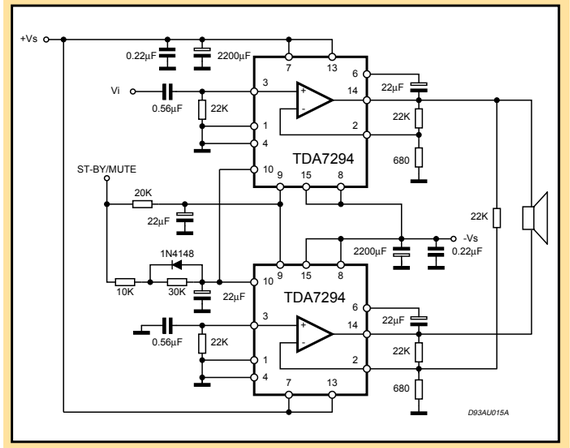

Parallel with 7293:

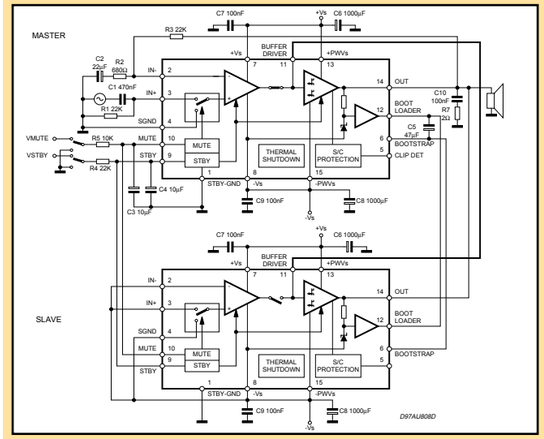

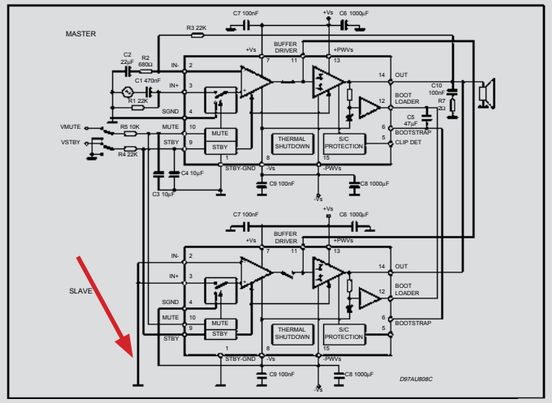

Warning

Make sure to use the schematic from the datasheet from 2003. Slave mode is activated by pulling IN+, IN- and SGND to -Vs, the negative supply! In older versions from 1999 of the schematic slave mode is NOT activated properly, which may lead according to reports on the internet to the destruction of the chip.

Document last modified and saved: 22 January 2012 5:42 PM

Schematics and Bill of materials for TDA amplifier

Simplified schematic of bridged and paralleled modes

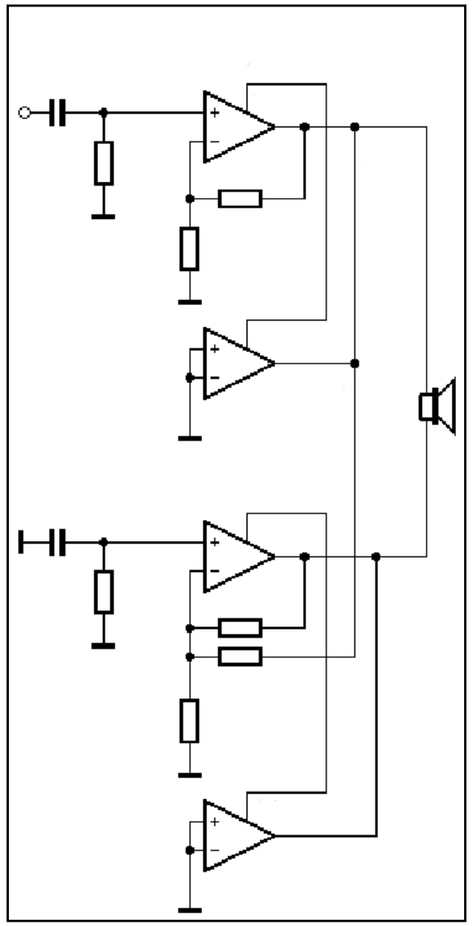

Bridged+paralleled mode

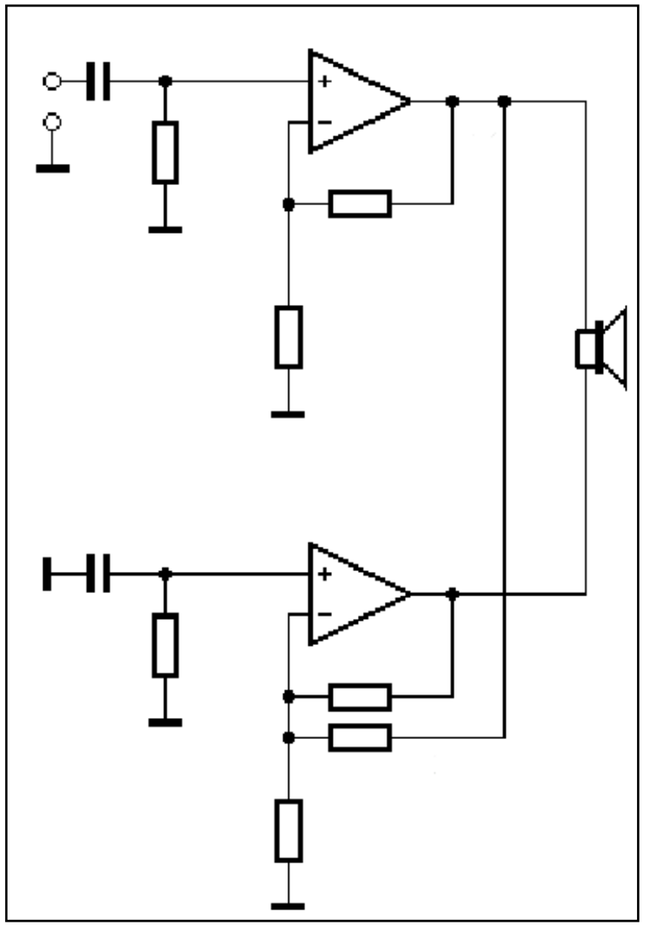

Bridged mode

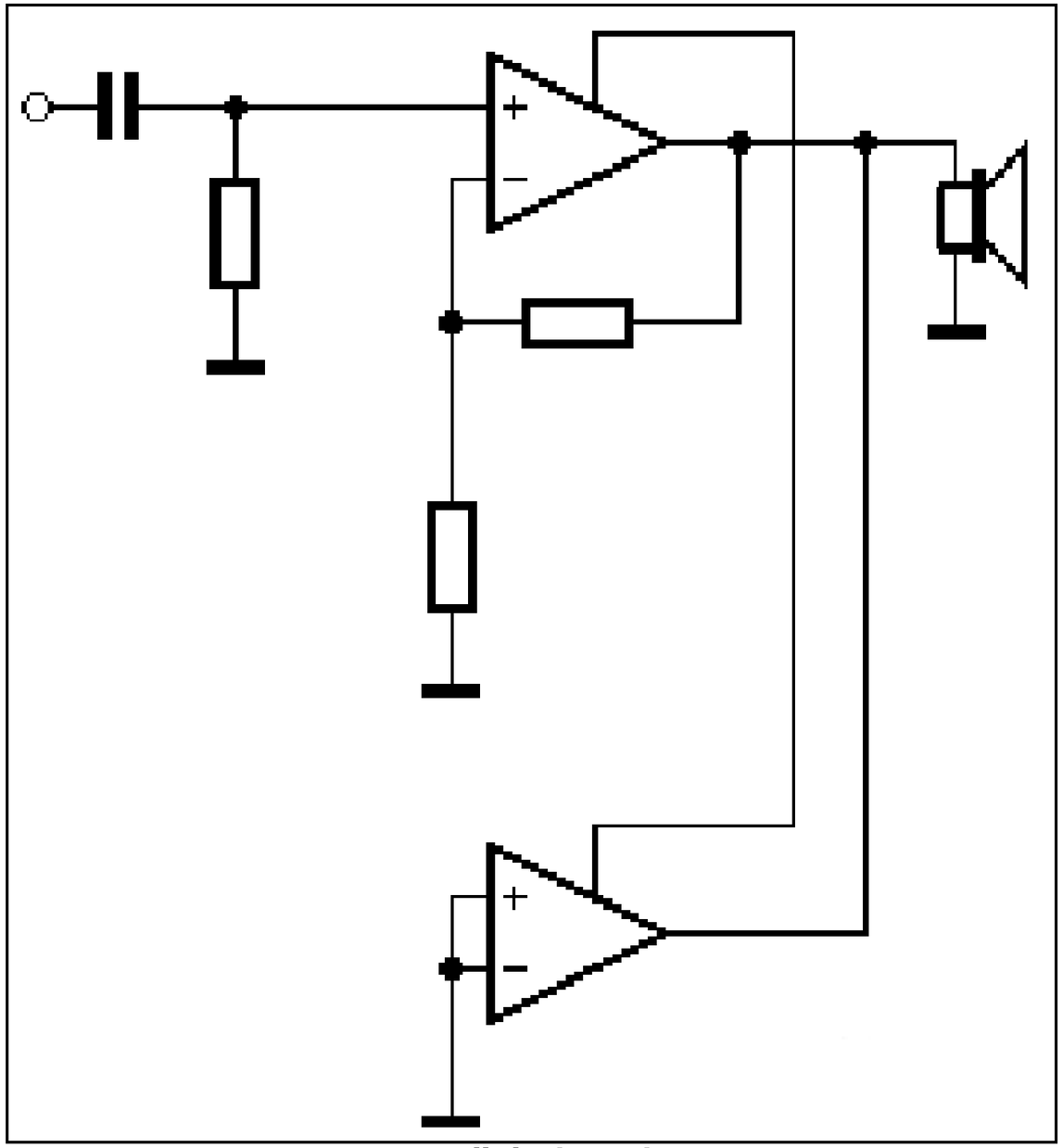

Paralleled mode

Schematics and Bill of materials for TDA amplifier

Connections between single, bridge and parallel modes

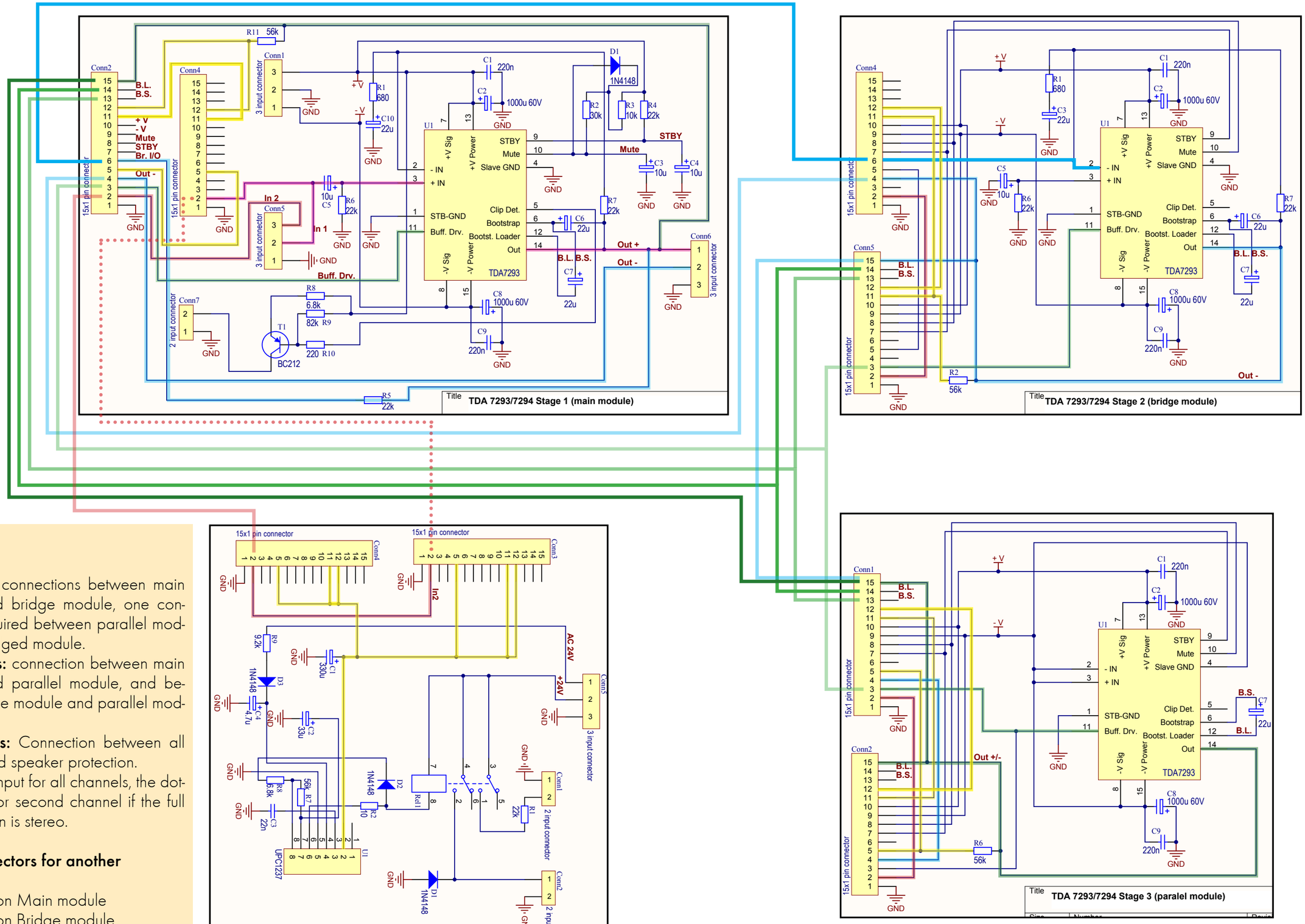

Notes

Blue lines: connections between main module and bridge module, one connection required between parallel module and bridged module.
Green lines: connection between main module and parallel module, and between bridge module and parallel module.
Yellow lines: Connection between all modules and speaker protection.
Red lines: Input for all channels, the dotted line is for second channel if the full configuration is stereo.

Input connectors for another modules:

- Conn4 on Main module
- Conn5 on Bridge module
- Conn2 on parallel module

Document last modified and saved: 22 January 2012 5:42 PM

Schematics and Bill of materials for TDA amplifier

Variations between main, bridge, and parallel modules

One channel (mono) applications:

- **About 75-80W:**
1. Main module only
2. Main module and speaker protection

- **About 150-200W on 8 Ohm:**
1. Main module and Bridge module
2. Main module, Bridge module and speaker protection

- **About 120W on 4 Ohm:**
1. Main module, parallel module
2. Main module, parallel module and speaker protection

- **About 180W on 4 Ohm:**
1. Main module, and 2 parallel module
2. Main module, 2 parallel module, and speaker protection

- **About 220W on 8 Ohm:**
1. Main module, 1 parallel module, bridge module and 1 parallel module
2. Main module, 1 parallel module, bridge module, 1 parallel module and speaker protection

- **About 300W on 4 Ohm:**
1. Main module, 2 parallel module, bridge module and 2 parallel module
2. Main module, 2 parallel module, bridge module, 2 parallel module and speaker protection

Two channel (stereo) applications:

- **About 2x75-80W:**
1. Main module, speaker protection, main module

- **About 2x150-200W on 8 Ohm:**
1. Main module and Bridge module, speaker protection, main module, bridge module

- **About 2x120W on 4 Ohm:**
1. Main module, parallel module, speaker protection, main module, parallel module

- **About 2x180W on 4 Ohm:**
1. Main module, and 2 parallel module, speaker protection, main module, 2 parallel module

- **About 2x220W on 8 Ohm:**
1. Main module, 1 parallel module, bridge module and 1 parallel module, speker protection, main module, 1 parallel module, bridge module and 1 parallel module

- **About 2x300W on 4 Ohm:**
1. Main module, 2 parallel module, bridge module and 2 parallel module, speaker protection, main module, 2 parallel module, bridge module and 2 parallel module

Bridge application:

1) - 1 TDA729x IC paralleled / bridge

2) - 2 TDA729x IC paralleled / bridge

8 Ohm	4 Ohm	
W	W	V
85	120[1)]	± 20
125	175[1)]	± 26
150	**210[1)]**	**± 29**
180[1)]	250[2)]	± 33
220[1)]	**300[2)]**	**± 40**

Single application:

1) - 1 TDA729x IC paralleled

2) - 2 TDA729x IC paralleled

8 Ohm	4 Ohm	
W	W	V
30	50	± 23
40	65	± 26
50	**80**	**± 29**
65	100[1)]	± 33
85	**125[1)]**	**± 40**
100[1)]	150[2)]	± 44
120[1)]	180[2)]	± 47

PCB for modular expandable

TDA amplifier project

PCB for TDA729x amplifier project

PCB of main module

TOP LAYER

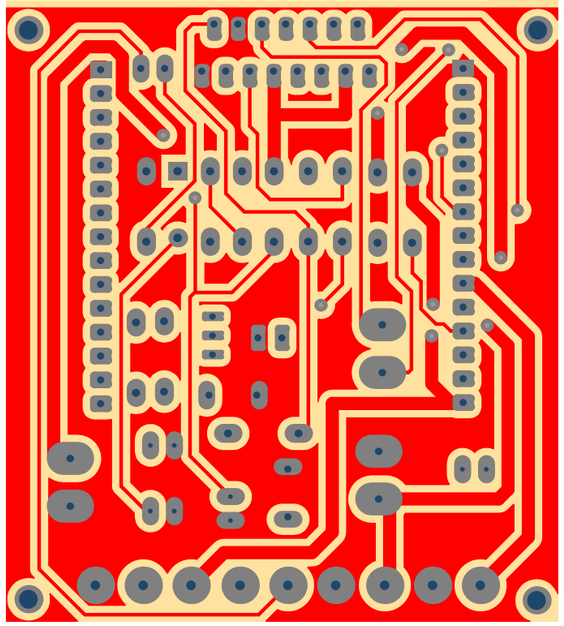

BOTTOM LAYER

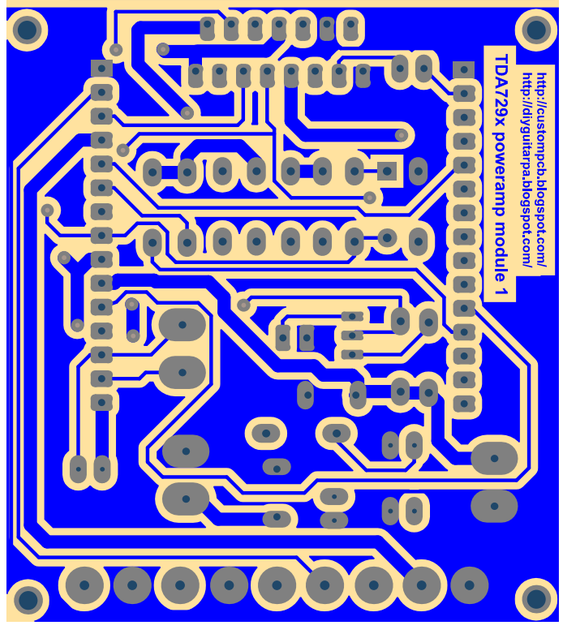

OVERLAY ON TOP LAYER

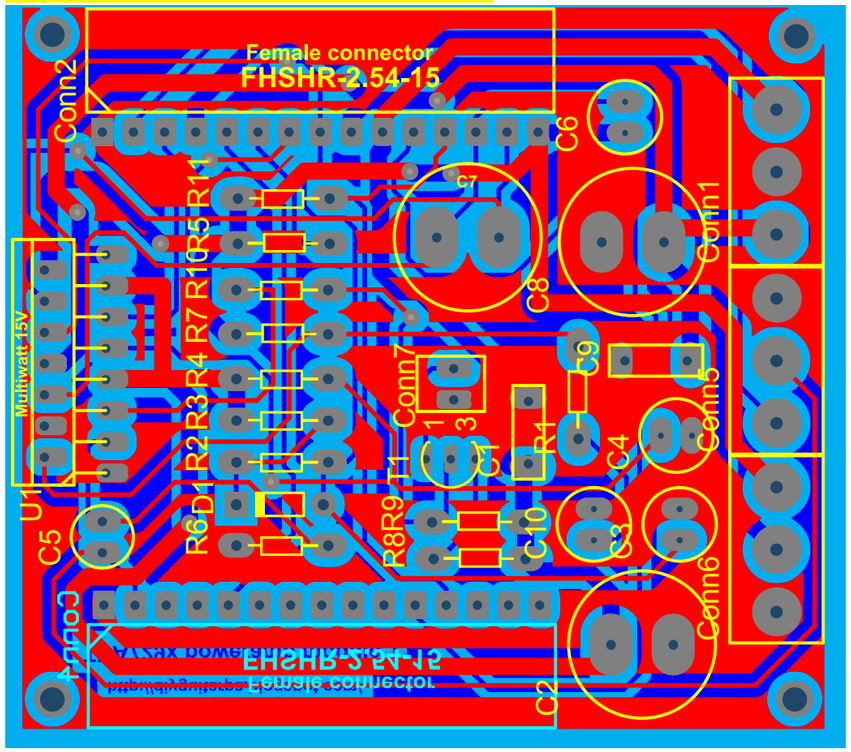

Notes

This module can be used alone for mono - or with speaker protection - for stereo amplifiers. This is the first module for all possible configurations. Conn4 can be connected to the right side of speaker protection only, Conn2 is the input of bridge, parallel or speaker protection modules.

PCB for TDA729x amplifier project

PCB of bridge module

TOP LAYER

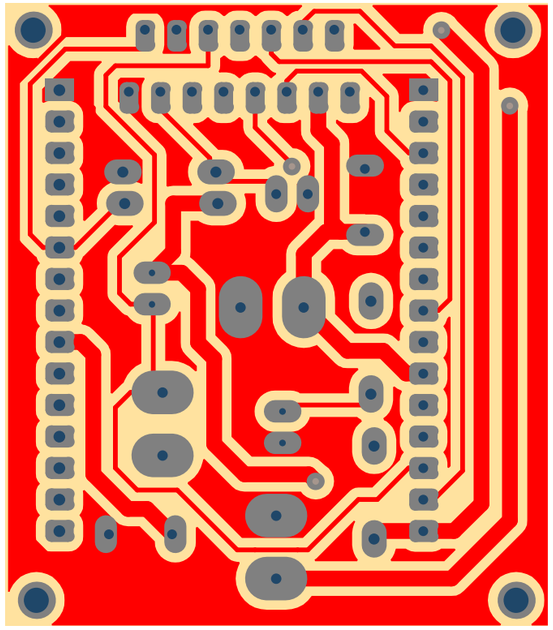

BOTTOM LAYER

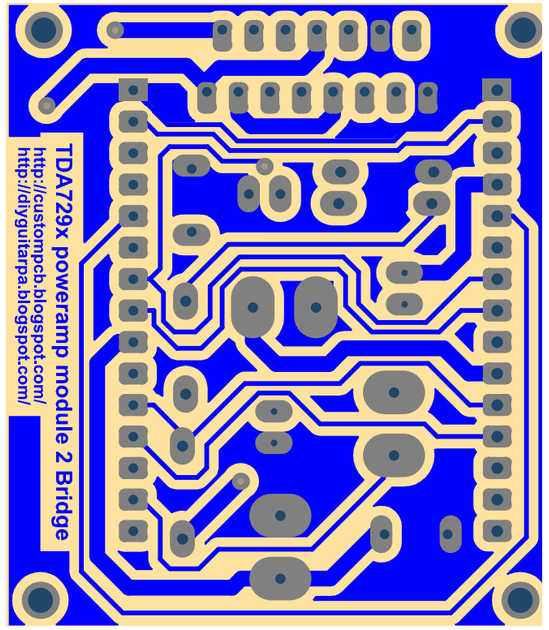

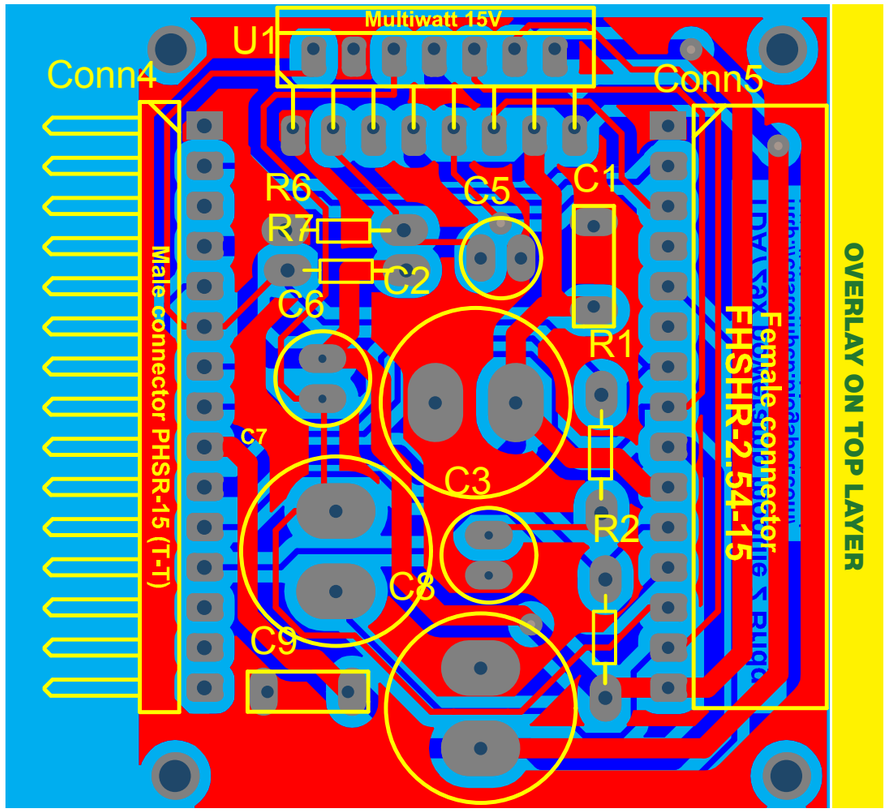

Notes

This is the **bridge** module of this project. This module can be connected to the right side of first (main) module only. This module duplicate the output power with 8 ohm speakers. 4 Ohm speakers cannot be used with bridge amplifier if parallel modules not used.

PCB for TDA729x amplifier project

PCB of parallel module

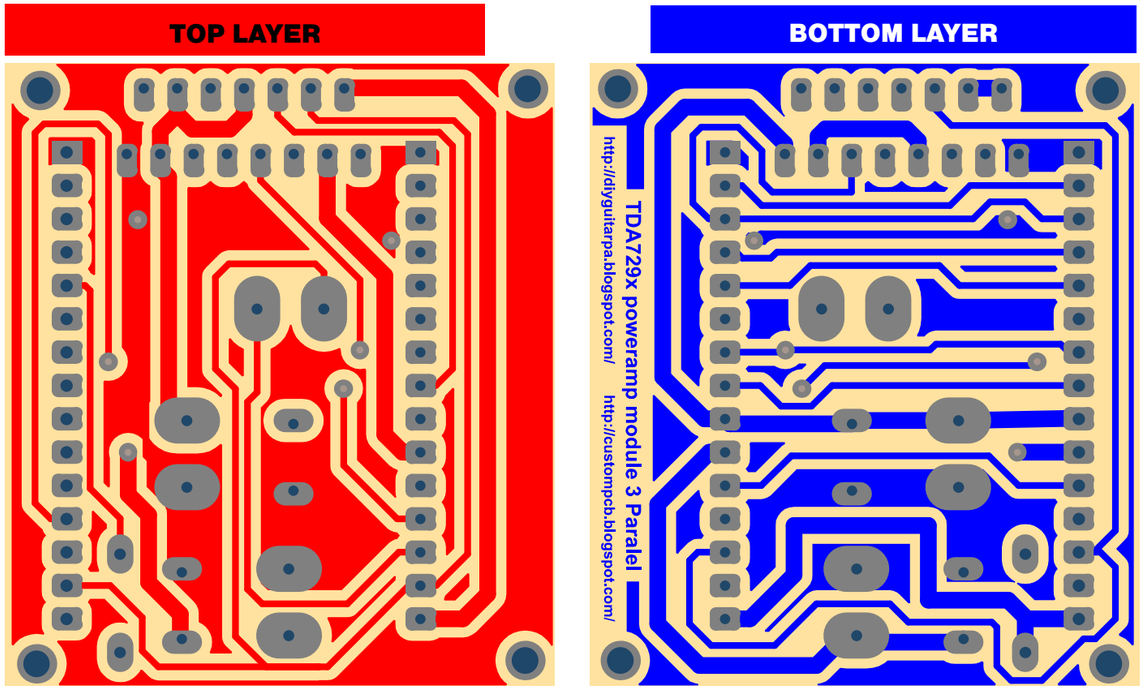

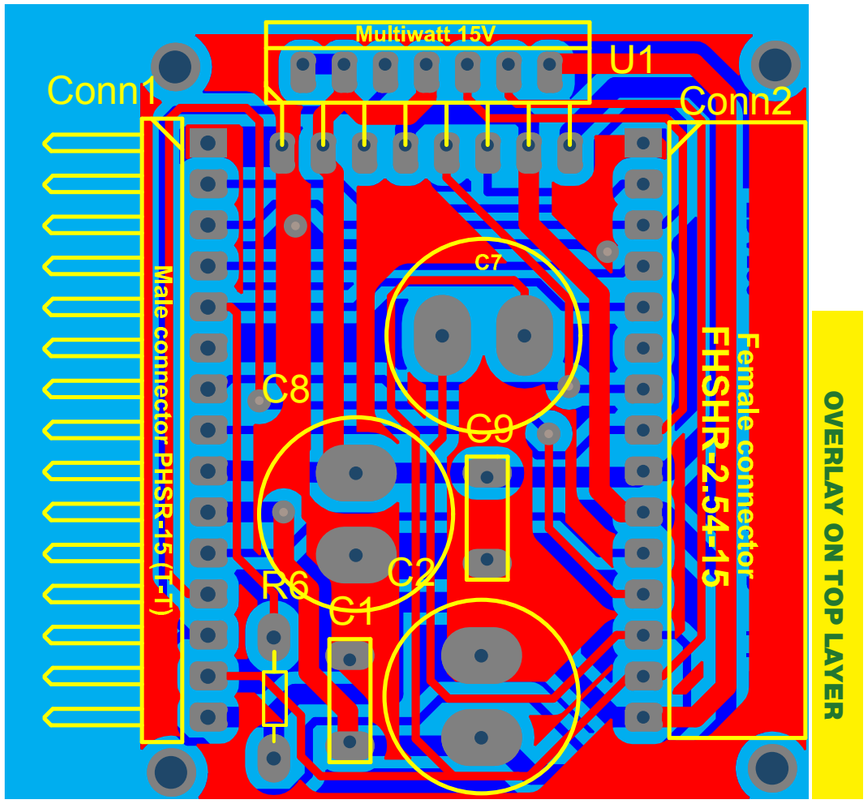

Notes

This is the **parallel** module of this amplifier project. This mode can be connected to the right side of first (main) module to use with 4 ohm speakers, or can be connected to the second (bridge) module to use bridged amp with 4 ohm speakers instead of 8. For parallel amplification use only TDA7293 only. **This module can be duplicated on single or bridged configurations after main or bridged module** to increase the maximum output current. It's mean, this module can be connected to the previous parallel module as second parallel output.

PCB for TDA729x amplifier project

PCB of speaker protection module

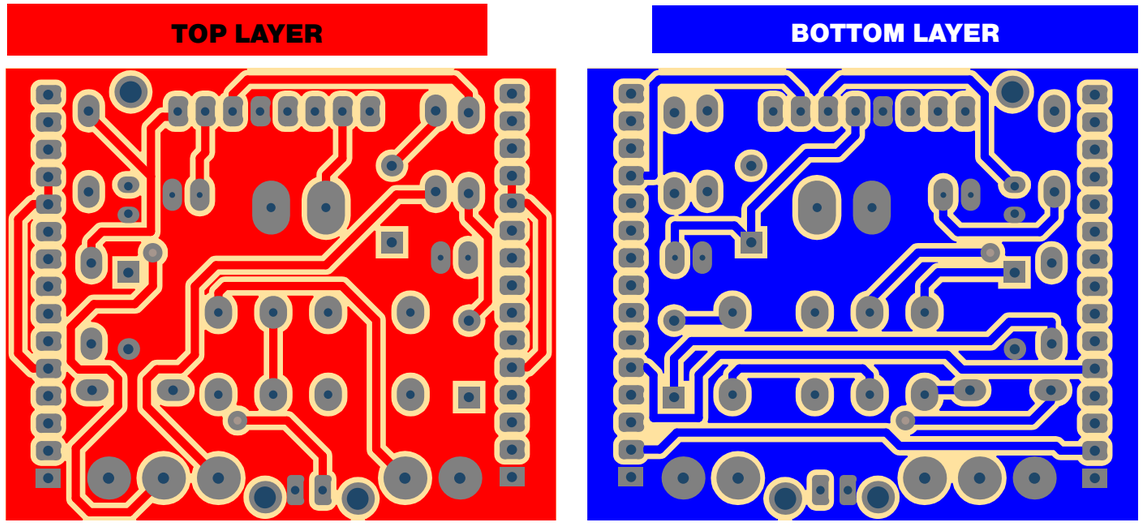

Notes

This is very simple, cheap and optional module for all configuration of this amplifier project with **UPC1237**. This module possible to use for all one channel mono and all two channels stereo configurations. **This module (if used) must be connected between the last module of left channel and the first (main) module of right channel**. Otherworld, the left side connector (Conn3) of speaker protection must be connected to the last module (main, bridge or parallel) of left channel, and the right side connector (Conn4) must be connected to the (first) main module of right channel.

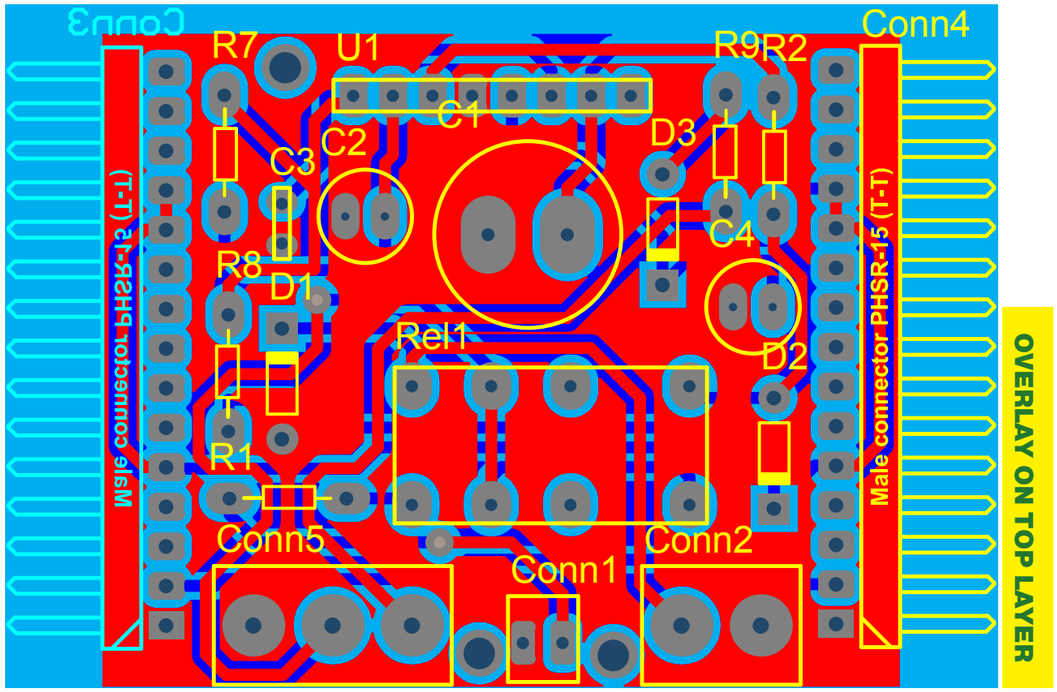

Examples how to connect modules and build instrument amplifiers

Examples for modular amplifiers

Mono bridge, single and parallel, – stereo bridge and single amp

Mono bridge

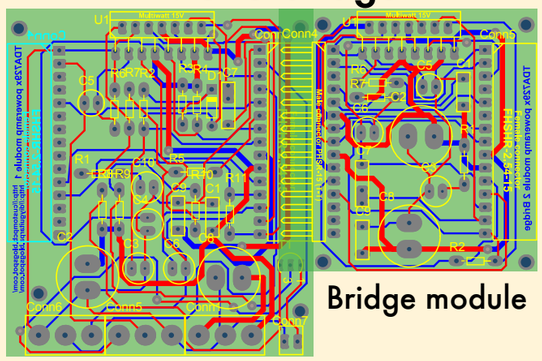

Bridge module

Main module

Mono parallel

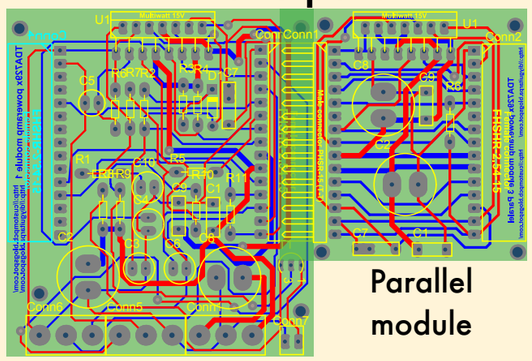

Parallel module

Main module

Stereo bridge

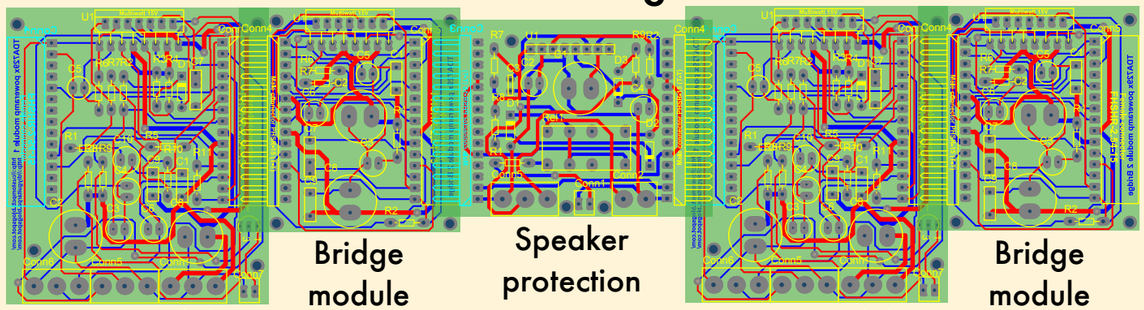

Main module

Bridge module

Speaker protection

Main module

Bridge module

Mono single

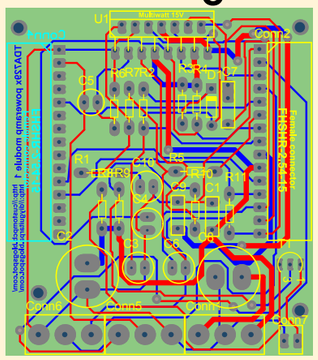

Main module

Stereo single

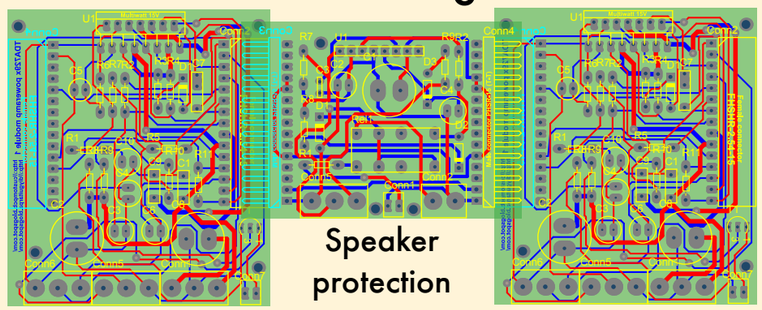

Main module

Speaker protection

Main module

Examples for modular amplifiers

Stereo bridge + parallel, – mono bridge + doubled parallel amp with speaker protection

Stereo bridge + parallel

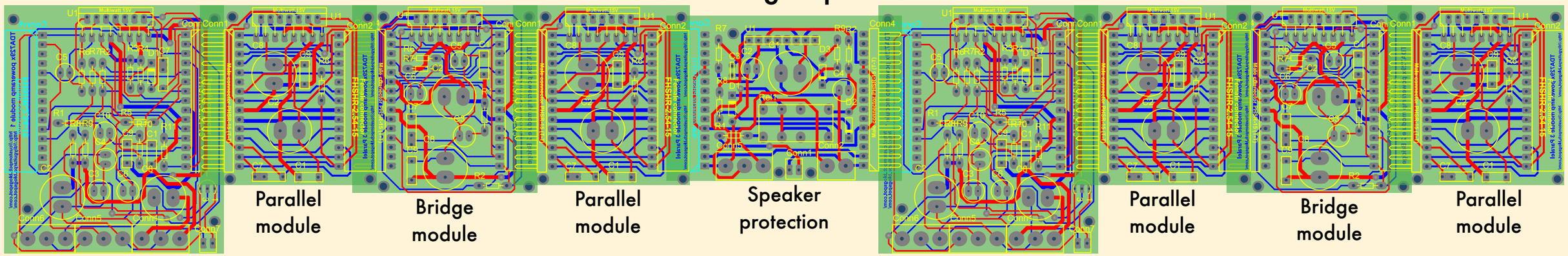

Mono bridge + doubled parallel amplifier with speaker protection

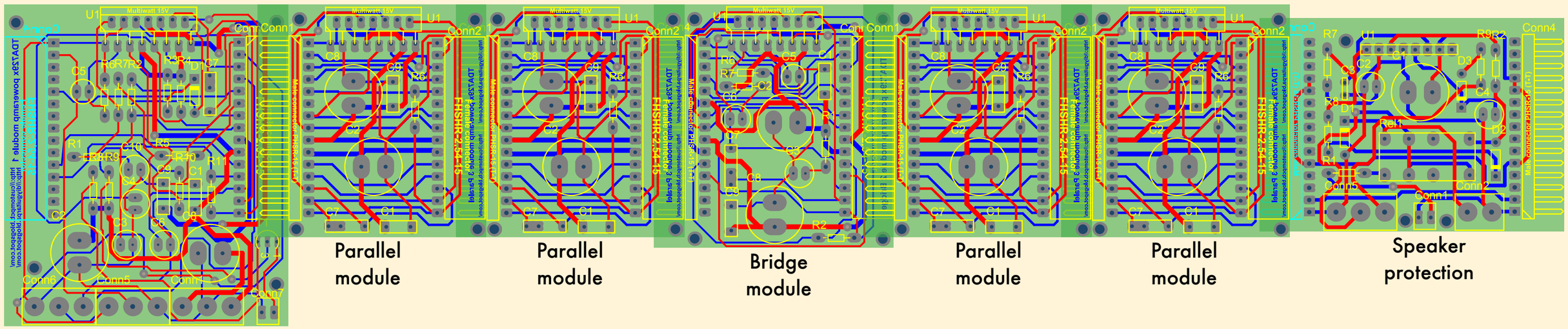

More power with parallel modules up to 800W

More power with parallel modules

More power with 3 parallel modules

Notes

As previous application examples, I offered two parallel module after all main and bridge module on the whole system. With this system by the official datasheet the possible output power is 300W.

For one 300W system these modules required:

- 1 Main module
- 2 Parallel module
- 1 Bridge module
- 2 Parallel module
- Speaker protection with FAN controller

This system contains 6 TDA7293 chips, for stereo application required 12 chips.

But try to increase the maximum number of parallel modules more than 2. If modify the number of 2 parallel modules to 3, the possible output power is around 800W:

- 1 Main module
- 3 Parallel module
- 1 Bridge module
- 3 Parallel module
- Speaker protection with FAN controller

This system contains 8 TDA7293 chips, for stereo application required 16 chips + speaker protection. The 800W output power maybe true if one chip really gives 100W. But this system required more powerful power supply, and better heating system with fan controller.

Bridge application:

1) - 1 TDA729x IC paralleled / bridge

2) - 2 TDA729x IC paralleled / bridge

8 Ohm	4 Ohm	
W	W	V
85	120[1])	± 20
125	175[1])	± 26
150	**210[1])**	**± 29**
180[1])	250[2])	± 33
220[1])	**300[2])**	**± 40**

Single application:

1) - 1 TDA729x IC paralleled

2) - 2 TDA729x IC paralleled

8 Ohm	4 Ohm	
W	W	V
30	50	± 23
40	65	± 26
50	**80**	**± 29**
65	100[1])	± 33
85	**125[1])**	**± 40**
100[1])	150[2])	± 44
120[1])	180[2])	± 47

More power with parallel modules

Speaker protection schematic with PWM fan controller V:1

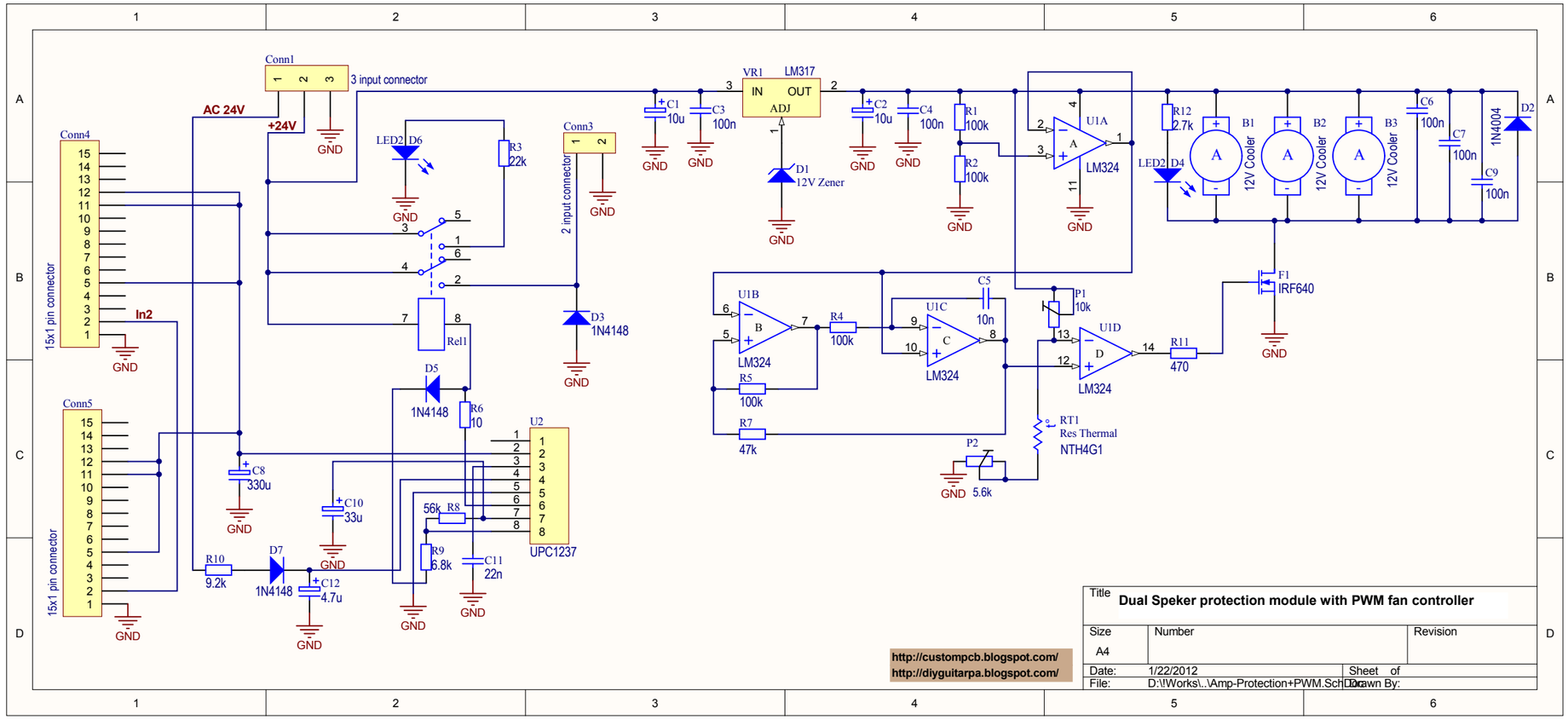

Bill of Materials

Protection+PWM.SchDoc 1/22/2012 17:29:40

Comment	Footprint	Value	Quantity	Pins	Designator
12V Zener	Diode		1	2	D1
Adj Voltage Regulator +	221A-04	LM317	1	3	VR1
Cap	Elco 12 mm, 2 mil pins	330u	1	2	C8
Cap	Elco 6mm, 1 mil pins	10u	2	2	C1, C2
Cap	Elco 6mm, 1 mil pins	33u	1	2	C10
Cap	Elco 6mm, 1 mil pins	4.7u	1	2	C12
Connector	Panel Connector 2 input Small	2 input connector	1	2	Conn3
Connector	Panel Connector 3 input Small	3 input connector	1	3	Conn1
Cooler 12V	2 pin connector 100mil	12V Cooler	3	2	B1, B2, B3
Diode	Diode	1N4004	1	2	D2
Diode	Diode	1N4148	3	2	D3, D5, D7
Header 15 pin	Male connector PHSR-15 (T-T)	15x1 pin connector	2	15	Conn4, Conn5
LED2	2 pin connector 100mil		2	2	D4, D6
LM324	J014	LM324	1	14	U1
N-CHANNEL MOSFET	TO220	IRF640	1	3	F1
NonPolarized Cap	CAP, Ceramic, 1MIL	100n	5	2	C3, C4, C6, C7, C9
NonPolarized Cap	CAP, Ceramic, 1MIL	10n	1	2	C5
NonPolarized Cap	CAP, Ceramic, 1MIL	22n	1	2	C11
Relay 2	Relay RE2L 24V DC		1	8	Rel1
Res Thermal	2 pin connector 100mil	NTH4G1	1	2	RT1
Resistor	Resistor 300mil	10	1	2	R6
Resistor	Resistor 300mil	100k	4	2	R1, R2, R4, R5
Resistor	Resistor 300mil	2.7k	1	2	R12
Resistor	Resistor 300mil	22k	1	2	R3
Resistor	Resistor 300mil	470	1	2	R11
Resistor	Resistor 300mil	47k	1	2	R7
Resistor	Resistor 300mil	56k	1	2	R8
Resistor	Resistor 300mil	6.8k	1	2	R9
Resistor	Resistor 300mil	9.2k	1	2	R10
Trimmer pot	POT Trimmer Small	10k	1	3	P1
Trimmer pot	POT Trimmer Small	5.6k	1	3	P2
UPC1237	UPC1237		1	8	U2
			46		

Notes

This new schematic made for this modular amplifier project is PWM fan controller needed. If you build amplifier system with parallel modules, better heating needed. This schematic contains simple speaker protection circuit with UPC1237, but FAN controllers included for 3 12V coolers. These coolers have to be assembled to the heatsink or tho the case of the amplifier. This new circuit can be used and connected between the left and right channels, or after the last module of one channel of mono application. The 10kOhm RT1 thermal resistor must be fixed to the heatsink.

More power with parallel modules

Speaker protection PCB with PWM fan controller V:1

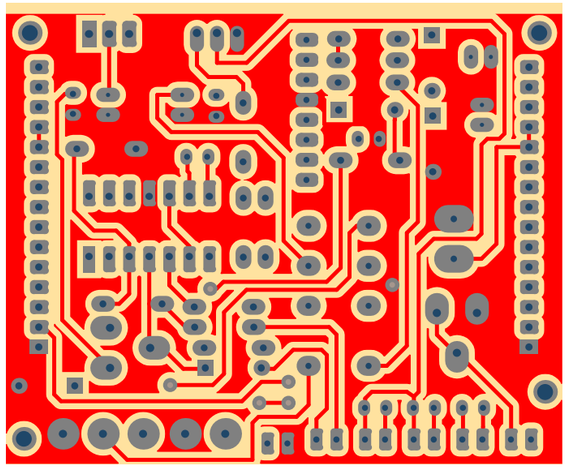

TOP LAYER

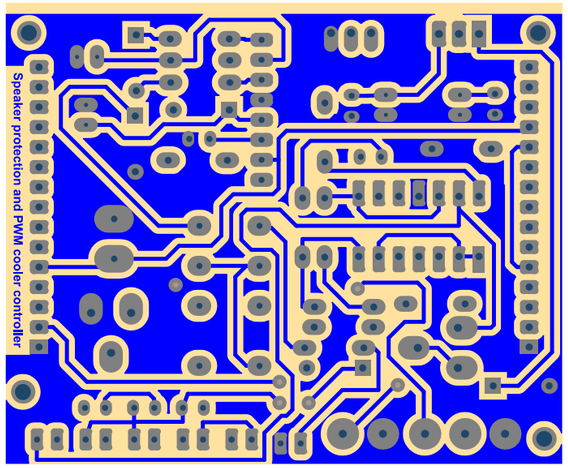

BOTTOM LAYER

OVERLAY ON TOP LAYER

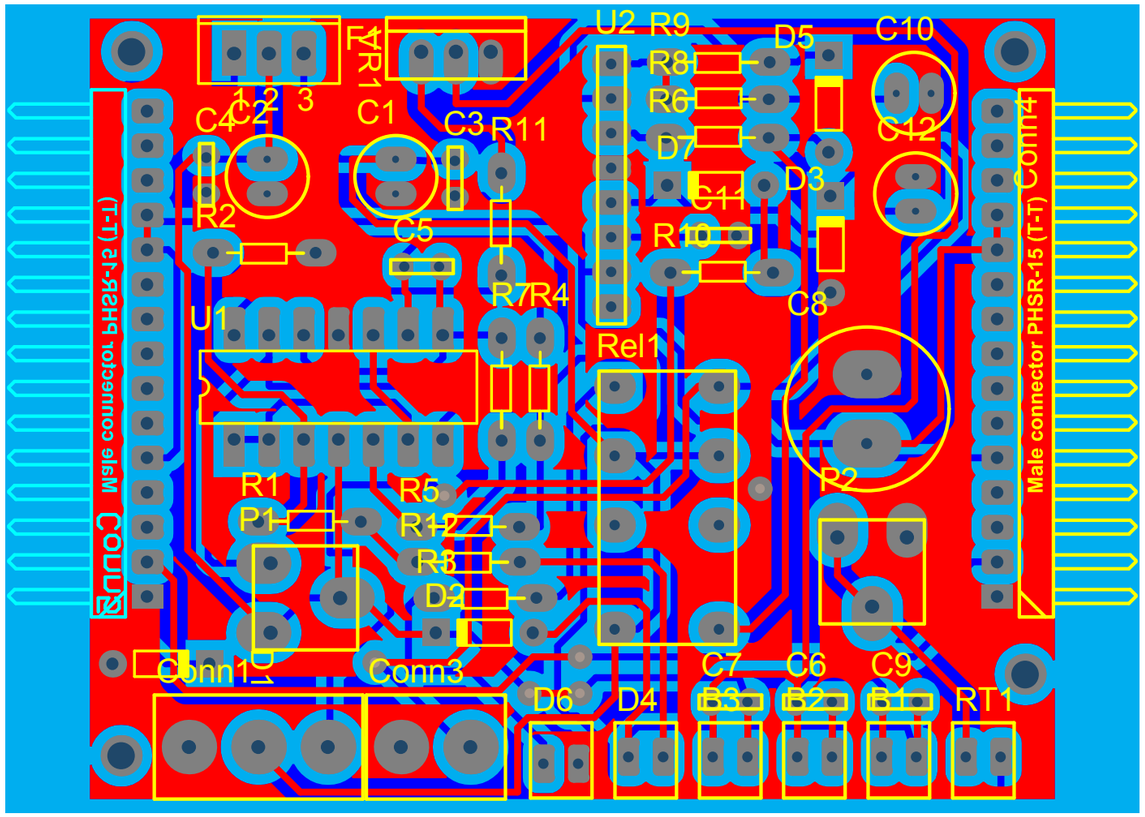

More power with parallel modules

Speaker protection schematic with PWM fan controller V:2

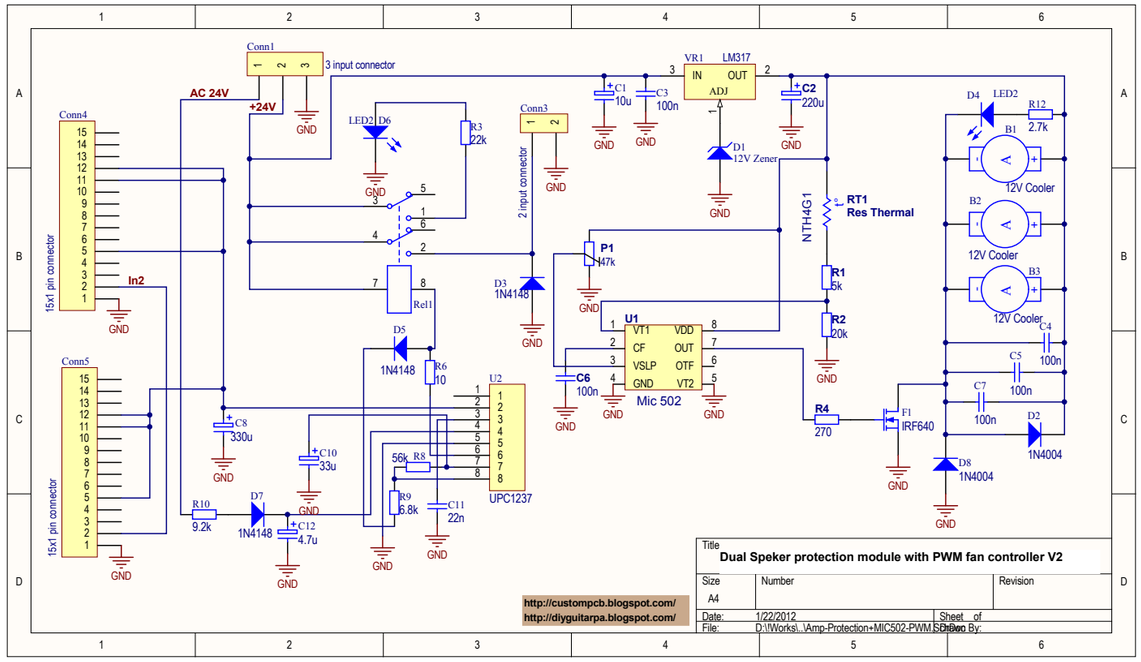

Notes

This is the second version of speaker protection with new PWM fan controller. The main part of new fan controller is the MIC502 fan controller chip. With this solution the PCB of this circuit can be much smaller. The schematic contains speaker protection with UPC1237. With P1 potentiometer set the "sleep mode", the minimum value of the temperature when the coolers starts. I offer 3 or more 12V coolers for heatsink and for the case, depending on the power of full amplifier system.

Bill of Materials

Protection+MIC502-PWM.SchDoc 1/22/2012 17:30:35

Comment	Footprint	Value	Quantity	Pins	Designator
LED2	2 pin connector 100mil		2	2	D4, D6
Cooler 12V	2 pin connector 100mil	12V Cooler	3	2	B1, B2, B3
Res Thermal	2 pin connector 100mil	NTH4G1	1	2	RT1
Adj Voltage Regulator +	221A-04	LM317	1	3	VR1
NonPolarized Cap	CAP, Ceramic, 1MIL	100n	4	2	C3, C4, C5, C7
NonPolarized Cap	CAP, Ceramic, 1MIL	22n	1	2	C11
NonPolarized Cap	CAP, WIMA, 2MIL	100n	1	2	C6
12V Zener	Diode		1	2	D1
Diode	Diode	1N4004	2	2	D2, D8
Diode	Diode	1N4148	3	2	D3, D5, D7
Cap	Elco 12 mm, 2 mil pins	220u	1	2	C2
Cap	Elco 12 mm, 2 mil pins	330u	1	2	C8
Cap	Elco 6mm, 1 mil pins	10u	1	2	C1
Cap	Elco 6mm, 1 mil pins	33u	1	2	C10
Cap	Elco 6mm, 1 mil pins	4.7u	1	2	C12
Header 15 pin	Male connector PHSR-15 (T-T)	15x1 pin connector	2	15	Conn4, Conn5
MIC 502 FAN CONTROLLER	P008	Mic 502	1	8	U1
Connector	Panel Connector 2 input Small	2 input connector	1	2	Conn3
Connector	Panel Connector 3 input Small	3 input connector	1	3	Conn1
Trimmer pot	POT Trimmer Small	47k	1	3	P1
Relay 2	Relay RE2L 24V DC		1	8	Rel1
Resistor	Resistor 300mil	10	1	2	R6
Resistor	Resistor 300mil	2.7k	1	2	R12
Resistor	Resistor 300mil	20k	1	2	R2
Resistor	Resistor 300mil	22k	1	2	R3
Resistor	Resistor 300mil	270	1	2	R4
Resistor	Resistor 300mil	56k	1	2	R8
Resistor	Resistor 300mil	5k	1	2	R1
Resistor	Resistor 300mil	6.8k	1	2	R9
Resistor	Resistor 300mil	9.2k	1	2	R10
N-CHANNEL MOSFET	TO220	IRF640	1	3	F1
UPC1237	UPC1237		1	8	U2
			42		

Document last modified and saved: 22 January 2012 5:42 PM

More power with parallel modules

Speaker protection PCB with PWM fan controller V:2

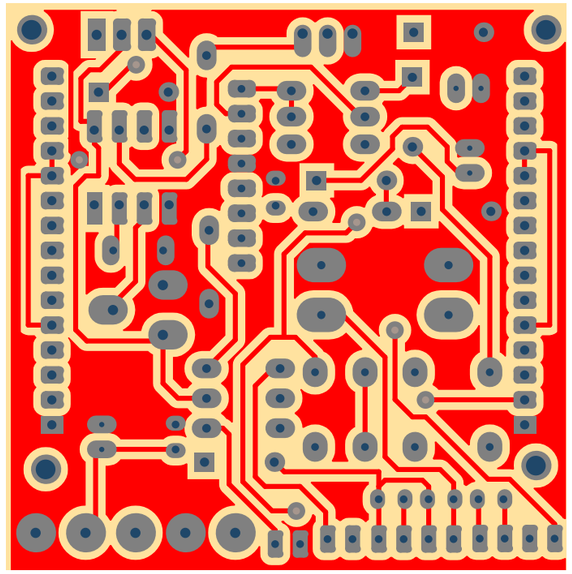

TOP LAYER

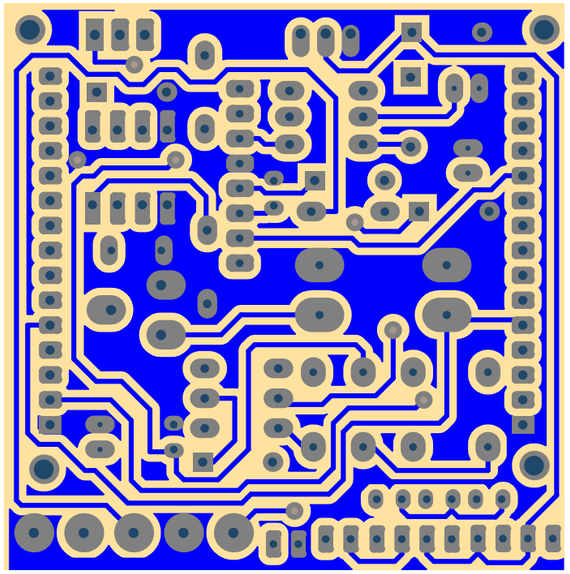

BOTTOM LAYER

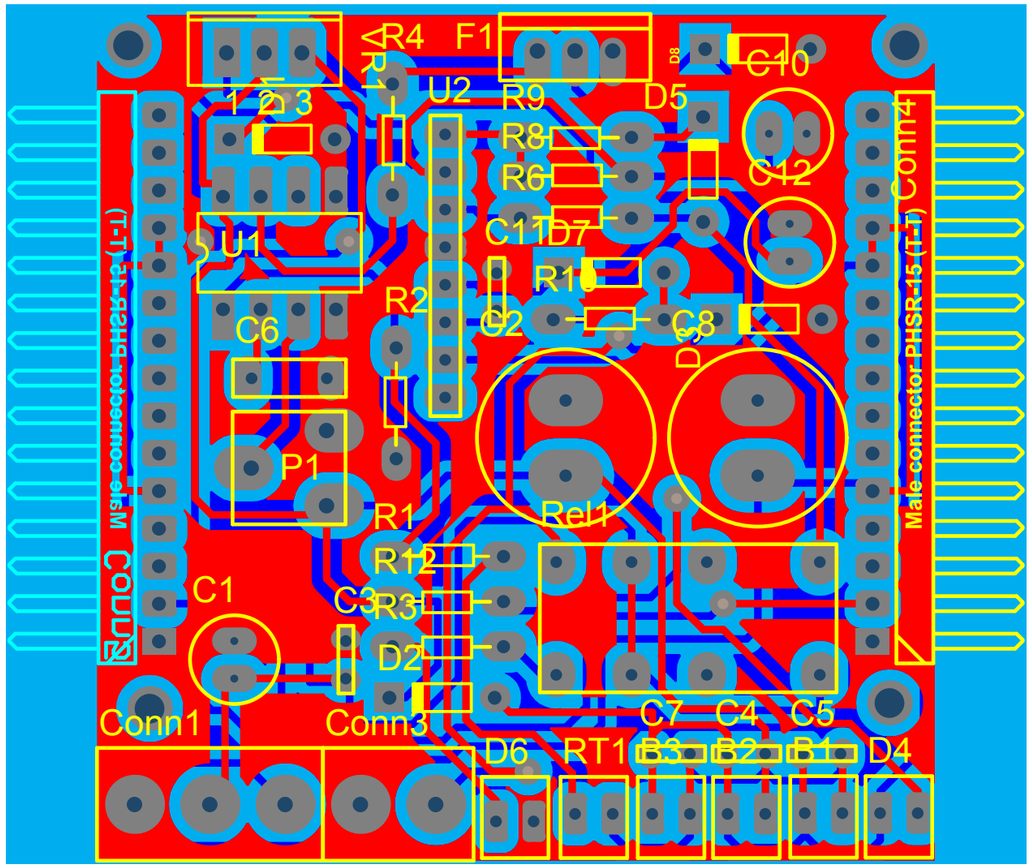

OVERLAY ON TOP LAYER

English blog and PCB order: http://custompcb.blogspot.com/
Hungarian blog and PCB order: http://diyguitarpa.blogspot.com/
The Youtube Channel • Picasa gallery • Email: gitarfogas@gmail.com

Document last modified and saved: 22 January 2012 5:42 PM