ISSN 1018-5593

Commission of the European Communities

nuclear science and technology

Identification of improvements of advanced light water reactor concepts

Report

EUR 14296 EN

S

Commission of the European Communities

nuclear science and technology

Identification of improvements of advanced light water reactor concepts

W. Frisch, K. Liesch, B. Riegel

Gesellschaft für Reaktorsicherheit (GRS) mbH
Forschungsgelände
D-W-8046 Garching

Contract No ETNU 0013/D(A)

Final report

Publication of this report has been supported by
the Dissemination of Scientific and Technical Knowledge Unit,
Directorate-General for Information Technologies and Industries, and Telecommunications,
Commission of the European Communities, Luxembourg

Directorate-General
Science, Research and Development

1993

Published by the
COMMISSION OF THE EUROPEAN COMMUNITIES
Directorate-General XIII
Information Technologies and Industries, and Telecommunications
L-2920 Luxembourg

LEGAL NOTICE

Neither the Commission of the European Communities nor any person acting on behalf of the Commission is responsible for the use which might be made of the following information

Cataloguing data can be found at the end of this publication

Luxembourg: Office for Official Publications of the European Communities, 1993

ISBN 92-826-5116-9

Printed in Belgium

Table of Content

1 Introduction

Concerning the peaceful use of nuclear energy, the last two decades are characterized by a continuous effort to improve reactor safety. Various measures by authorities and industry have contributed to a considerable reduction of the risk potential of nuclear power plants.

The experience gathered from plant operation and operational occurences, the knowledge gained from safety research and development activities and the deeper insight into plant design obtained through probabilistic risk assessment studies, has led to numerous design improvement and backfitting measures in existing nuclear power plants. This continuous process of safety improvement was accelerated after the TMI accident. More in-depth-analyses and plant evaluations were performed, design deficiencies were searched for, numerous design improvements were implemented, and severe accident research was started, however, the well proven safety philosophy had not been changed significantly.

In recent years, in many countries a certain stillstand was observed in the utilisation of nuclear energy, for various reasons (safety, economics, electricity demand, public acceptance). The accident of Chernobyl contributed significantly to this halt, but also to a worldwide re-consideration of safety philosophy, though a direct transfer of the lessons learned to other plants is not possible because of the unique situation and design features of RBMK-reactors.

The periods of construction slow down and rethinking of the safety philosophy has been utilized by many vendors to improve their design concepts or even develop entirely new concepts.

2 Scope and Structure

2.1 Scope of Work

The scope of this report is to identify the improvement of these reactor developments with respect to reactor safety. This includes the collection of non-proprietary information on the description of the advanced design characteristics, especially summary design descriptions and general publications.

This documentation is not intended to include a safety evaluation of the advanced concepts, however, it is structured in such a way that it can serve as a basis for a future safety evaluation. This is taken into account in the structure of the information regarding the distinction of the various concepts with respect to their "advancement" and the classification of design characteristics according to some basic safety aspects (see chapter 5). The overall description concentrates on those features which are relevant to safety. Other aspects, such as economy, operational features, maintenance, construction period etc. are not considered explicitly in this report.

By far the largest number of advanced concepts belongs to the class of Light Water Reactors (LWR). This report concentrates on this particular class of electric power generating reactors and does not include heavy water moderated reactors and gas and liquid metal cooled reactors.

The content of this report is supposed to give an overview based on the most recent publications available rather than an extended description of all details. However, it has been tried to identify and collect the most detailed non-proprietary information on the various concepts, therefore, the list of literature is recommended to readers who want to study certain safety aspects in greater detail.

2.2 Structure of Information

When presenting material on "advanced" design features, the first task is to define the reference situation or reference design to which the presented one is an advancement.

This reference situation, however, is not identical for each advanced design, because starting conditions are different in different countries. In addition, the design concepts described here have been initiated at different times.

Rather than trying to specify one artificial common reference basis for all designs, the individual reference design or situation is always indicated. In order to limit the material presented here, only the design differences which characterize the "advancement" of a concept with respect to safety are presented. For design approaches which have no particular reference design, the description is more detailed.

The degree of advancement is different in the different design approaches presently underway. Therefore, the concepts have been divided into three groups, as has been done previously in international documentations, however, the names have been changed slightly for a better characterisation of the features. In the past, the three groups have been called "evolutionary", "passive" and "revolutionary". In this document the following groups have been defined:

- evolutionary concepts
- evolutionary concepts with enhanced passive features
- innovative concepts.

Chapter 4 is structured according to this scheme. It should be noted that for some designs classification is not clear-cut. In those cases the classification chosen here should not be taken as an evaluation of the degree of advancement. The order in which the particular concepts are described in each group is arbitrary. An attempt has been made to structure the information in chapter 4 in the same way for each design concept. This has not been achieved in all cases, e.g. where only little information was available or where the advanced concept relates only to certain aspects, such as the German containment concept.

The amount of information presented here is not a measure for the importance or the advancement of a design. As this report utilizes non-proprietary information, and as different vendors have different strategies with respect to degree of detail and timing of design publications, distortions are unavoidable.

There are different ways of improving safety of a nuclear power plant. In order to support a safety evaluation of particular concepts (which is not within the scope of this study), the design improvements have been sorted and put into different classes. This is presented in a very condensed format in chapter 5.

3 General Design Requirements

Design developments are in general based on detailed design requirements. These requirements cover all design aspects such as economy, operation, safety, etc. Many design concepts are based on design requirements specified by potential customers or utility organisations. The documentation of these requirements is beyond the scope of this report, however, in view of future activities concerning safety evaluations of particular concepts, it is helpful to know the safety related requirements. Therefore, reference is made to some publications.

In the USA very detailed sets of requirements have been commonly developed by the utilities within EPRI. The requirement documents are very detailed and not publicly available, however, all important requirements are presented in condensed form in a summary documentation /3.-1/. These documents contain requirements which apply to all new reactor designs and in addition those which apply to evolutionary or passive (evolutionary with passive features) designs respectively.

In France utility requirements are presently being developed within the PWR development programme of EDF, called REP 2000 /3.-2/.

The view of German industry on next generation LWRs is laid down in /3.-3/ and in /3.-4/.

The proceedings of the IAEA workshop in Chicago /3.-4/ also contain overview papers on design requirements from other countries. More recent information is available from the IAEA Technical Committee Meeting on Progress in Development and Design Aspects of Advanced Water Cooled Reactors in Rome in September 1991 /3.-5/.

These requirement documents are in some cases necessary for a safety evaluation, especially for concepts which are not yet finalized and where some features are specified in terms of requirements only.

4 Description of Safety Related Features of Advanced Design Concepts

In this section safety related design features are documented. Reference is made to non-classified documents only.

Special emphasis is laid on those concepts which recently have made considerable progress in development and specification. Some conceptual studies which have been stopped or which have not yet been presented in the public in sufficient detail, are not referred to or are mentioned only briefly. The documentation is grouped into the three classes as mentioned in chapter 2.2. To obtain a better overview, the first group is divided into PWR and BWR. Therefore, the information is arranged in four sub-chapters:

4.1 Evolutionary PWR Concepts
4.2 Evolutionary BWR Concepts
4.3 Evolutionary Concepts with Enhanced Passive Features
4.4 Innovative Concepts

For each design concept, recent literature is given. In some cases portions of the system description and figures are taken from the cited literature.

4.1 Evolutionary PWR Concepts

The groups of evolutionary PWR concepts (4.1) and evolutionary BWR concepts (4.2) include those design concepts which are based on previous designs to a large extent with some improvements related to safety. These improvements are very often derived directly from previous experience with the older reference design. These concepts are in general called "advanced" by their vendors, indicating that they are advanced compared to their predecessors.

Some of the improvements in the advanced concepts are derived from experience in other countries, indicating that safety improvement is more and more becoming an international affair with mutual influence. A typical example for this is the positive experience with internal axial pumps and fine motion control rod drives in European BWRs,

which is adopted in the ABWR. Other examples are degree of redundancy and physical separation of safety system components.

For the different concepts the degree of detail of relevant design information is very different, in this group especially because of the different states of development. The ABWR construction has already been started while for other concepts as in France and Germany conceptual design studies are not yet finished. Sometimes, different design options for the same function are still under discussion.

To limit the information in this document, the design concepts of the evolutionary PWR and BWR are not described in detail, only the safety relevant advancements compared to the respective predecessor are presented.

4.1.1 APWR 1300

4.1.1.1 General

The Westinghouse-Mitsubishi APWR 1300 /4.1.1-1, 4.1.1-2/ is a design based on the Westinghouse 1300 MWe 4 loop plant. Development and basic design have been completed. This concept has recently received NRC design approval. Main plant data are:

- Electric power 1300 MW
- Thermal power 3623 MW
- Refueling cycle 13.5 months
- 4 coolant loops
- Design life 60 years

The main safety features, which are different from the reference plant and which make this design an "advanced" design, are listed in the following sections.

4.1.1.2 Core

The number of fuel pins is increased in order to reduce power density and increase the safety margin. The number of fuel elements is kept unchanged at 193 with 19x19 fuel pins.

Additional features are an improvement of the mechanical strength of the fuel assembly (e.g. increased number of spacer grids) and a stainless steel radial reflector for neutron leakage reduction and improvement of fuel utilization. The core design allows for spectral shift operation and Pu-recycling (MOX fuel elements).

4.1.1.3 Reactor Pressure Vessel and Coolant System

The main difference compared to the current Westinghouse PWR design is an increased pressure vessel volume, mainly obtained by increasing the distance between core outlet and coolant loop nozzles by 3 m. The pressure vessel design is such that no welds are in the height of the core region. The pressurizer volume has also been in-

creased. The steam generator design has been improved, based on previous operational experience with corrosion. Steam generator tube material is a Ni-Cr-Fe Inconel alloy with low cobalt content (TT 690 alloy).

4.1.1.4 Engineered Safety Features

Four complete and independent trains of mechanical equipment are provided in the safety systems (high pressure injection, residual heat removal and containment spray system).

The low head core reflood tank is installed in the containment. This passive component replaces the low head safety injection pump.

One emergency water storage tank is installed in the containment to feed the four safety injection pumps.

The design foresees 4 emergency feedwater pumps, two of them are steam turbine driven.

There is a considerably larger degree of separation between control system and safety system functions. This includes the Chemical and Volume Control System (CVCS), which is designed as a control system and is separated from the safety system.

The extension of the protection system includes a steam generator overfill protection.

4.1.1.5 Containment

The new design provides a large (60 m) diameter steel spherical shell containment with a larger volume and more inner space for maintenance.

4.1.1.6 Other Features

The Instrumentation and Control System is microprocessor-based, using digital equipment which has already been used in operating US nuclear power plants.

The target for an occupational exposure is 1 man Sv/year. Main plant features to achieve this value are fewer refueling and maintenance shutdowns, greater accessibility for maintenance and greater use of automation in inspection and steam generator tube repair.

The vendor has performed a comparative PSA for the APWR 1300 and the conventional Westinghouse PWR. Values of core melt frequencies due to internal events are stated as follows: 1.5×10^{-6}/year for APWR 1300 and 5×10^{-5} for the conventional Westinghouse PWR.

4.1.2 APWR 1000

4.1.2.1 General

This is a design concept based on the conventional 3-loop-PWR of Westinghouse, taking into account all important improvements of the APWR 1300.

Main plant data are:

- Electrical power 1000 MW
- Thermal power ≅ 2800 MW
- Refueling cycle 18 months
- 3 coolant loops
- Design life 60 years

In the following sections safety related improvements are listed. In general, all facts mentioned for the APWR 1300 apply to the APWR 1000 /4.1.2.-1/. There are only some slight differences, partly due to the different size. Only these differences are mentioned.

4.1.2.2 Core

The number of fuel assemblies has been increased from 157 to 193, increasing the size of the core to the size of the conventional 4-loop-PWR of Westinghouse. By this

means, the power density has been reduced, safety related nuclear and thermal parameters are improved by 20 to 25 %.

4.1.2.3 Reactor Pressure Vessel and Coolant System

The general design of the reactor pressure vessel is that of a standard 4-loop PWR. Due to the oversized vessel neutron fluence is lower and vessel coolant inventory is larger than in conventioal 3-loop-PWR's of Westinghouse.

The pressurizer volume is increased by about 20 %. This feature and the "oversized" core and reactor vessel smoothen plant transients in such a way that no motor operated relief valves are necessary.

4.1.2.4 Engineered Safety Features

The emergency core cooling system is called "Integrated Safeguard System" (as for the APWR 1300), and includes three accumulators, one emergency water storage tank and four mechanical subsystems with high head and low head pumps and residual heat removal heat exchangers. The four pumping subsystems are physically separated.

The emergency feedwater system consists of two subsystems, each with one motor driven pump and one steam turbine driven pump.

4.1.2.5 Containment

In contrary to the APWR 1300 the APWR 1000 containment design is similar to that of current designs. It is a cylindrical double containment with an inner steel shell and an outer concrete shield wall. The volume is slightly larger than that of the conventional PWR design.

4.1.2.6 Other Features

One plant design goal is the reduction in the number of reactor trips. The vendor lists several design changes which contribute to this: Improved feedwater system, larger operating and safety margins, use of digital control, ability to maintain reactor operation after 100 % load rejection.

4.1.3 System 80+™

4.1.3.1 General

System 80+™ (hereafter called System 80+) is the name of the advanced PWR of Combustion Engineering /4.1.3-1, 4.1.3-2/. It is an improved version of the System 80 PWR, currently in operation in Palo Verde, USA. Main plant data are:

- Electrical power ≅ 1400 MW
- Thermal power 3800 MW
- Refueling cycle up to 24 months
- 2 steam generators, 4 main coolant pumps
- Design life 60 years for RPV

4.1.3.2 Core

Most of the changes in core design are made to improve core control performance (fast power changes by rod motion). One feature related to safety has to be mentioned: The core outlet temperature has been lowered somewhat, thus increasing the thermal operating and safety margin.

4.1.3.3 Reactor Pressure Vessel and Coolant System

The System 80+ pressurizer volume will be increased considerably in order to mitigate transients. The steam generator will incorporate some design enhancements, such as improved steam dryers, increased heat transfer area and a slightly reduced full power

steam pressure. Secondary water inventory is enlarged in order to increase the time for dry out.

4.1.3.4 Engineered Safety Features

The safety injection system (SIS) has been revised and considerable changes have been made to increase safety. The most important ones are:

- Four train safety injection
- refueling water storage tank in the containment
- direct vessel injection

Four 50 % capacity safety injection pumps are provided, they operate in both the "high pressure" and "low pressure" mode, pumping borated water from four safety injection tanks. By this means separate low pressure pumps with their cross connections to the shutdown cooling system are eliminated.

Direct vessel injection is provided in order to avoid spillage of one train which injects near the postulated break location.

An additional safety related improvement is the automatic emergency feedwater system, consisting of four separate pumps and piping systems. Two pumps are motor driven, two are steam turbine driven.

The Safety Depressurization System (SDS) is a safety grade system to provide a means for the depressurization of the primary coolant system. In addition it is a system to be utilized in beyond-design-basis accidents to initiate the primary system bleed and feed function.

The shutdown cooling system has been upgraded. The design pressure has been increased to 62 bar, giving better protection against overpressurization during shutdown.

4.1.3.5 Containment

The containment will be a steel sphere of 60 m diameter. The shield building will be reinforced concrete structure, there are no structural connections with the steel sphere. Means are provided to mitigate consequences of severe accidents, e.g. the possibility of flooding the reactor cavity.

4.1.3.6 Other Features

The Chemical and Volume Control System has been simplified and downgraded to an operational system. All safety functions have been transferred to other safety systems.

The electrical systems have been reconfigured in order to improve their reliability. A diverse AC power supply (combustion turbine) has been installed in addition to the two safety grade emergency diesels.

The Instrumentation and Control System uses both conventional technics and modern digital components, e.g. digital protection system.

4.1.4 French N4+

N4+ is the name for a plant design based on the current N4 PWR of Framatome, presently under construction in Chooz, taking into account the French utility requirements of the development programme REP 2000. The design concept will be completed in 1992, details are not yet published, however, the main important trends can be derived from the safety requirements of the REP 2000 concept. N4+ will have the following safety related design improvement:

- simplified systems and functions
- higher degree of automation in order to increase grace periods for the operator
- improved design against operator errors
- increased plant design life
- improved containment design to cope with severe accidents
  (mitigating functions after core melt accidents)

4.1.5 Konvoi 95+

The most recent PWR plants operating in Germany are the three Konvoi plants (1300 MWel). Certain safety features, provided in some of the advanced PWR concepts have been implemented in this plant, e.g. the four independent trains of safety injection system or system optimization to reduce the number of scrams.

The design study for an advanced KONVOI plant utilizes the experience with the operating KONVOI plants to a large extent. The new design (in some places called KONVOI 95+) is not yet finalized /4.1.5-1/. Improvements related to safety are mainly in three areas: preventive accident management measures to further reduce the probability of severe core damage, mitigative accident management measures to maintain containment integrity after severe core damage and digital microprocessor control.

The favourite preventive accident management procedure to cope with a complete loss of feedwater accident (main, auxiliary and emergency feedwater) is the secondary bleed and feed function with a depressurisation of the steam generators and the subsequent use of the feedwater tank inventory and/or mobile pumps for decay heat removal and plant cooldown. Primary bleed and feed is foreseen as well in order to further reduce the probability of a core melt under high primary system pressure.

The containment function will be improved in order to limit radioactive releases after severe core damage accidents. In order to avoid long term overpressure failure, the accident management procedure of filtered containment venting is foreseen. This function is being implemented in operating PWRs in Germany as backfitting measure. The basemat design will be changed in such a way that coolability of the molten core is obtained.

Microprocessor based digital I&C-systems are under development now and are intended to be used on all three levels of plant operation of German plants: controls, limitation systems (almost safety grade) and safety grade reactor protection system.

Reassessment of certain system design features is being carried out with the objective of increasing intervention intervals (grace periods). Parameters under consideration are steam generator secondary water inventory, pressurizer volume, accumulator volume, reactor pressure vessel inventory etc.

4.1.6 NPI Concept

4.1.6.1 General

NPI is a subsidiary of Framatome and Siemens located in Paris and founded in 1989. The task of the company is the design of a new common French-German PWR. This design is understood as an evolutionary one as it is based on both reactor types N4 and Konvoi, however, it can also be classified as a design with innovative and passive features, especially with respect to the confinement design to ensure integrity even after core melt accidents. (For this reason, the inclusion of this concept in chapter 4.1 is somewhat arbitrary). As the new common product is still discussed with utilities and safety authorities, only a preliminary status can be given here on the basis of a few papers /4.1.6-1, 4.1.6-2/. The main plant data are:

- Electric power 1300-1400 MW
- Thermal power (to be determined)
- 4 coolant loops
- Design life 60 years

The safety objectives are based on the defense-in-depth concept. The following general objectives are a basis for the design approach:

- Technical improvements will be performed in domains which contribute significantly to the core melt probability.
- After a hypothetical severe accident the confinement integrity has to limit the release of radioactivity so that no off-site provisions are necessary.

4.1.6.2 Core

The core consists of 205 fuel assemblies where each fuel assembly consists of (17 x 17) - 25 fuel rods. The active length is 420 cm and the linear heat rate is 183 W/cm. Concerning the fuel management features, margins should be available for providing additional flexibility to allow certain strategies (e.g. low leakage patterns or increasing the cycle length or introducing MOX-fuel).

Compared to N4 and Konvoi the incore instrumentation will be extended and mounted from above.

4.1.6.3 Reactor Pressure Vessel and Coolant System

The material for the coolant loops is ferritic with a one layer cladding allowing the break preclusion concept. Concerning the primary loop components approved systems and designs (from N4 and Konvoi) will be taken over with minor modifications if necessary. Final decisions are not yet taken.

For the improvement of inherent safety the volume of the pressurizer and the steam generators will be increased.

4.1.6.4 Engineered Safety Features

Four complete and independent trains are foreseen for instrumentation and control, class IE electric power, safety injection system, component cooling water, service water system and the safety condensor (SACO).

Two trains are planned for the residual heat removal system (RHR) and the fuel pool cooling (FPC) system.

A strict and complete separation between the different trains exists including hazards (fire, flood), and ventilation.

The safety injection systems include the medium head injection to the cold legs, the accumulator injection to the hot legs and the low head injection to the cold and hot legs.

4.1.6.5 Containment

The present development of the containment is focussed on a concept where the containment consists of a prestressed concrete cylinder with (if desired) an inner steel liner (fig. 4.1.6.-1). The function of a double containment is reached with a second ou-

ter reinforced concrete cylinder. The containment will have a low leakage rate and an annulus exhaust system.

One of the important objectives in the NPI concept is the integrity of the confinement during a core melt accident. Provisions are made to avoid basemat melt through either by a core catcher or by a design spreading out the molten material so that it will be coolable.

4.1.6.6 Other features

An in-containment refueling water storage tank (IRWST) is situated in the lower part of the containment. During refueling this water will be used for flooding of the concerned rooms. Both safety injection systems, the medium head safety injection (MHSI) and the low head safety injection (LHSI) take their water out of this IRWST in which the water flowing out of the break is collected. In consequence after a LOCA there is no switch to the pumps sucking from the containment sump.

Contrary to German PWRs where the fuel storage tank is in the containment, in the present concept the fuel storage tank is situated in the annular building outside the containment. A small internal fuel storage tank is used during the refueling process.

Fig. 4.1.6.-1: NPI reactor building

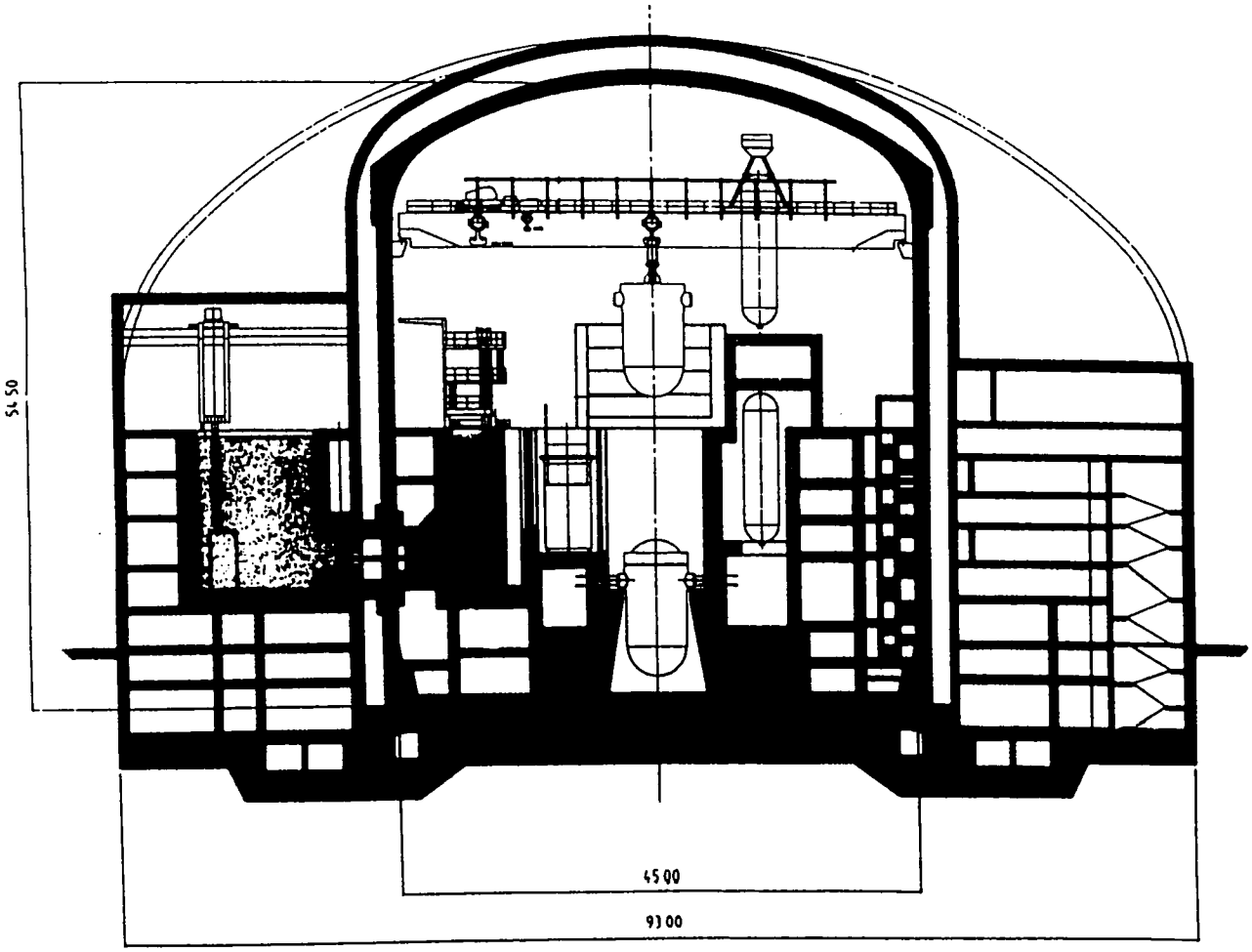

4.1.7 WWER 1000 - V 392

V 392 is a USSR design based on the WWER 1000 - V 320, which is operating in 17 units. Main goal of this advanced design is a reduction of severe core damage frequency with the aim of values not higher than 10^{-5}/year. Main plant data of the V 392 design are /4.1.7-1/:

- Electrical power ≅ 1000 MW
- Thermal power ≅ 3000 MW
- Number of coolant loops 4
- Design life 40 years

Extra systems are provided to cope with beyond design accidents, such as a fast boron injection system, a residual heat removal system and an additional system of hydro-accumulators.

The safety of the reactor has been improved by increasing shutdown reactivity from 6 % to about 10 %. This has been achieved by roughly doubling the number of control rods. Nuclear feedback is improved by a core design which guarantees negative coolant temperature feedback during the entire burnup cycle. It is intended to use burnable poison (gadolinium) to achieve this.

Some additional design improvements are related to other systems and components such as steam generator headers and main coolant pump seals.

4.2 Evolutionary BWR Concepts

4.2.1 ABWR 1300

4.2.1.1 General

The ABWR is an advanced light water reactor designed by GE, Hitachi and Toshiba. It is derived from the US BWR6 and the latest 1100 MWel Japanese plant. Experience of European (German and Swedish) BWR designs has also been incorporated. Two units are planned at the Kashiwazaki Kariwa site in Japan. Construction of the first unit has started in October 1991.

The main plant data are /4.2.1.-1/:

- Electrical power 1356 MW
- Thermal power 3926 MW
- System pressure 73 bar
- Number of internal recirculation pumps 10

The main features which are safety related improvements compared to the US and Japanese reference plants are presented in the following sections.

4.2.1.2 Core

The main core changes are made to optimize fuel utilisation and plant operation, however, some of the changes have a positive impact on safety, e.g. PCI-resistant fuel (PCI = pellet cladding interaction) or axially zoned fuel with higher enrichment and less gadolinium content in the upper half of the core. This latter feature allows for more uniform axial power distribution and thus assures a higher thermal margin.

4.2.1.3 Reactor Pressure Vessel and Coolant System

The most important improvement is the incorporation of internal main coolant recirculation pumps. Due to this change all large pipe nozzles below the elevation of the top of the active core are eliminated. The reactor pressure vessel volume has been reduced by reducing the pressure vessel height.

4.2.1.4 Containment

The containment is a steel lined reinforced concrete containment vessel. The concrete walls of the containment are integrated with the reactor building. Multiple horizontal vents are provided as connection between drywell and wetwell.

4.2.1.5 Engineered Safety Features

The emergency core cooling system (ECCS) consists of three redundant and independent divisions. Each division has one high pressure and one low pressure inventory makeup system. One high pressure system also has the function of reactor coolant inventory control for reactor isolation transients (reactor core isolation cooling system, RCIC). The RCIC is powered by a steam driven turbine, thus providing a diverse makeup source during loss of A-C-power events. The low pressure ECCS utilizes the three residual heat removal (RHR) pumps in the post-LOCA core cooling mode.

The ABWR incorporates the electric hydraulic fine motion control rod drive (FMCRD) with two diverse drive systems. The electric fine motion is used for control, the hydraulic for scram insertion. This drive system has good operational and safety records in European BWRs.

4.2.1.6 Other Features

The instrumentation and control system uses digital equipment to a high degree; e.g. for feedwater control, pump speed control and pressure control triplicated digital control is utilized. Data transmission in the ABWR is done with a multiplexed fiber optic data transmission system.

4.2.2 BWR 90

4.2.2.1 General

BWR 90 is an advanced BWR concept of ABB Sweden with a rating of 1200 MWe. An 840 MWel version has also been developed. The design is based on the latest Swedish BWRs delivered by ABB in Sweden (Forsmark 3 and Oskarshamn 3). In addition, experience from Finland is incorporated. The major safety characteristics of these operating plants are internal main coolant recirculation pumps, diverse electric/hydraulic control rod insertion, a prestressed concrete pressure suppression containment equipped with filtered venting and four subdivisions of engineered safety systems.

BWR 90 /4.2.2.-1, 4.2.2.-2, 4.2.2.-3/ represents a moderate advancement in design compared to the reference plants mentioned above, the design project was conducted in cooperation with the Finnish utility TVO (Teollisuuden Voima OY). The main plant data for the two versions are:

- Electric power	1170 MW	830 MW
- Thermal power	3300 MW	2350 MW
- Number of internal recirculation pumps	8	6
- Reactor operating pressure	70 bar	70 bar

4.2.2.2 Core

Reactor core design takes into account the continuous optimisation based on the SVEA fuel assembly. Features with some safety relevance are increased stability margins and a mechanically favourable fuel channel structure with a very low creep deformation rate.

4.2.2.3 Reactor pressure vessel and coolant system

No essential changes have been made compared to the proven design of the reference plant with internal recirculation pumps.

4.2.2.4 Containment

Design changes compared to the reference design have been made in order to mitigate the course of a beyond design core melt accident. Main features are:

- Blowdown of steam to the suppression pool via vertical concrete ducts to horizontal openings between drywell and wetwell.
- A pool permanently filled with water is provided at the bottom section of the lower drywell to collect fuel melt debris
- The containment vessel can be vented through filters which are located in the reactor building.
- Arrangements are made to be able to fill up the containment with water up to the level of the top of the core, in order to reach a final stable state after severe accidents.

4.2.2.5 Engineered Safety Features

The design of the engineered safety systems is characterized by a consistent functional and physical separation and a division into four subsystems. Two out of four subsystems are sufficient to provide water under all postulated LOCA conditions.

The safety related auxiliary equipment is also divided into four independent and physically separated subdivisions.

BWR 90 is characterized by diverse means of ensuring the functions of safety related systems, e.g. the use of diverse types of valves for pressure relief.

4.2.2.6 Other Features

Reactor protection and control system design as well as control room layout are based on the employment of modern micro-computers. The system arrangement satisfies the requirements of redundancy and physical separation.

In case of unavailability of the control room the process will be surveyed from an emergency monitoring centre.

4.3 Evolutionary Concepts with Enhanced Passive Features

This group of concepts is characterized by applying proven design features to a large extent, but also including new features and functions with special emphasis on passive safety system functions for emergency core cooling and decay heat removal. In the American literature, especially in the EPRI ALWR utility requirement document, they are referred to as Passive Advanced Light Water Reactors.

Two concepts have reached a rather advanced design stage: the AP 600 and the SBWR. In this group the German advanced containment design concept is also mentioned, because it is based on passive containment functions. As this concept concentrates on containment functions, the design of the reactor and coolant system is not specified. For the containment design development it is assumed that it is similar to the present Konvoi plant.

As the evolutionary concepts with passive features deviate more from their respective reference design, the presentation of features is more detailed and extended than for the concepts in section 4.1 and 4.2.

4.3.1 AP 600

4.3.1.1 General

The AP 600 design is an evolutionary PWR with passive safety system functions. It relies on proven PWR technology for its mainline power generation equipment and for plant support functions, based on standard 2 loop plants of Westinghouse.

AP 600's simplified nuclear steam supply system (NSSS) is a compact 2-loop arrangement with a lower power density core, passive containment, cooling and passive safety injection and residual heat removal systems. The steam generator and hermetically sealed reactor coolant pumps are integrated into a single structure to eliminate the need for separate pipe supports. The configuration has no crossover pipe and loop seals. Robotics introduced in the design permits steam generator inspection and maintenance during refueling, and reductions in worker radiation exposure.

Characteristic plant data are /4.3.1.-1 to 4 and 4.1.1.-2/:

- Electric power 600 MW
- Thermal power 1812 MW
- Number of loops: 2 hot legs, 4 cold legs
- Refueling cycle 18 months
- Design life 60 years

The main features related to safety are described in the following sections.

4.3.1.2 Core

The standard 2-loop PWR uses 121 (16 x 16) fuel assemblies and has a power density of 5.36 kw/ft. The refueling cycle averages 14 months. The low power density core for AP600 (3.84 kw/ft) is larger than its standard counterpart: 145 (17 x 17) fuel assemblies. This approach improves nuclear and thermal parameters by 25-30 % over the standard design. It also means lower fuel enrichment and an increase of more than 15 % in DNB (departure from nucleate boiling) and LOCA margins. Burnable poison is not required after the first cycle of operation.

The radial neutron reflector was originally designed and tested for the APWR 1300 reactor programme. It surrounds the core and replaces the former baffle structure between the core and the lower barrel. This reflector reduces neutron leakage, thereby improving core neutron utilization and reducing neutron fluence on the reactor vessel. This characteristic of reduced fluence is an important consideration in achieving 60-year plant design life.

The standard plant uses 45 control rods. They are used for load follow; however, current practice requires thousands of gallons of water per day to change the soluble boron concentration in order to meet the daily load follow schedule. AP600 contains 45 control rods plus 12 to 16 "gray rods". The gray rods (reduced worth control rods) are used to achieve daily load follow without having to change concentrations of boron in the primary coolant. This greatly simplifies the boron system and load-follow operations. AP600 does retain a boron system as a redundant safety feature: the soluble boron functions as a neutron absorber to achieve redundant cold shutdown (2,000 ppm) and helps control core reactivity (800-0 ppm).

4.3.1.3 Reactor Pressure Vessel and Coolant System

The size of the reactor pressure vessel is similar to that of a 900 MWel 3-loop-plant, and thus has a larger volume/power ratio.

The two main coolant loop configuration for AP600 means that there is a single hot leg pipe to transport reactor coolant to each steam generator. The piping contains a radius bend to direct the coolant up into the steam generator channel head. An 18-inch surge line is connected to the system through the hot leg. Four cold leg pipes (one per pump) transport reactor coolant back to the reactor vessel.

Bending the coolant loop piping reduces by half the amount of welding required compared with the standard plant. From an operating standpoint, pipe bends provide a low resistance flow path, as well as flexibility to accomodate the expansion difference between the hot and cold legs.

By adequate loop configuration and material selection it was made sure that the pipe stresses are low enough that the primary loop and large auxiliary lines meet leak-before-break requirements. Therefore pipe rupture restraints are avoided. The NSSS configuration is shown in fig. 4.3.1-1.

The model F steam generator is currently used in 75 plants. Several evolutionary design changes have been made in recent years to improve performance and increase service life: thermal treated Inconel-690 tube material is used to improve corrosion resistance; upgraded anti-vibration bars have been added to reduce wear; and the primary and secondary moisture separators have been upgraded. For AP600, the model F remains unchanged from the tube sheet to the top of the steam generator. However, the design of the channel head has been modified. It will be forged as one piece instead of welding it from multiple components so that the pumps can be directly mounted and maintenance/inspection procedures can be accomplished more easily.

Two canned motor pumps are mounted directly in the channel head of each steam generator. In this configuration, the pumps and the steam generator use the same structural support. The common vertical support is a single column extending from the floor to the bottom of the channel head.

The reactor coolant pump incorporated in AP600 is based on a pump design developed originally in 1953 for the nuclear Navy programme (SS Nautilus) and subsequently used with good results at Shippingport, Yankee Rowe, and in other Navy projects. The AP600 coolant pump contains some new features. It uses larger impeller and has a radial bearing motor assembly. These changes were made to increase the pump's rotating inertia.

In lieu of a water seal system, the AP600 pump is hermetically sealed. This eliminates the need for continuous charging and simplifies the design requirements for chemical and volume control systems. It totally eliminates any LOCA due to seal failure and eliminates all maintenance associated with seal replacement.

The AP600 pressurizer is 30 % larger than standard with increased transient margins. It contains no power-operated relief valves, and therefore eliminates the maintenance associated with reactor coolant system leakage.

4.3.1.4 Containment

The containment is a steel containment surrounded by a concrete shield building. A special feature is the passive containment cooling system (PCCS) which provides containment pressure limitation by cooling the outside surface of the steel containment after a loss of coolant accident or after loss of all alternate ultimate heat sinks. The system is described in the next section.

4.3.1.5 Passive Safety Systems

AP600's passive safety systems are considerably more simple and straightforward than the active safety systems used in today's PWRs. They do not depend on operators to take action. Instead, they rely on natural forces - such as gravity and natural circulation - and compressed gas to work. They contain fewer components: no pumps, fans, diesels, chillers or other rotating machinery. The design incorporates only a few slow speed air or motor valves to align the passive safety systems upon automatic activation. The passive safety approach does not require safety support systems, such as AC power, active cooling systems, nor the earthquake resistant buildings to house these components.

The AP600 passive safety system consists of:

- Passive residual heat removal (RHR)
- Passive containment cooling (PCCS)
- Passive safety injection

Residual Heat Removal System/Containment Cooling System

In AP600, core cooling is greatly simplified compared to conventional PWRs. From start to finish, gravity, convection, evaporation and condensation are the forces that drive the core cooling system in place of pumps, valves, operators and electricity.

A passive residual heat removal exchanger (PRHR HX), plus passive containment cooling, provides indefinite decay heat removal capability - and no operator action is required. Tests show that this system is capable of cooling the containment following a severe accident without exceeding design pressure.

The heat sink for the PRHR HX is the refueling water storage tank located inside the containment. The water volume in the tank is large enough to absorb decay heat for about two hours before the water would start to boil. If boiling does occur, the steam would vent to the containment and condense on the steel containment vessel, collect and then drain by gravity back into the tank.

The steel containment vessel is surrounded by a concrete shield 3-feet thick. Air circulating between the two structures augments the cooling process with natural convection of the heat to the atmosphere.

The elevated PCCS water storage tank will provide water for wetting the containment surface for three days following PCCS actuation. Operator action can be taken to replenish this water supply through installed piping connections and water sources. If no operator action can be taken after 3 days when the tank has drained, natural convective air heat removal will continue to function.

This provides sufficient heat removal to ensure that containment integrity is maintained although containment pressure would increase to near the design pressure.

PCCS Structure

The PCCS structures are schematically represented in the containment general layout of fig. 4.3.1-2. The 130 ft diameter steel containment, hausing the primary equipment and safeguard systems, includes a cylindrical shell with elliptical heads for both the upper and lower head of the vessel. The surrounding concrete shield building has top air inlet openings and houses a baffle to create the required air path. A reinforced concrete conical roof ends with the air exhaust chimney and houses a 450.000 US gallons water storage tank at an elevation sufficient to allow gravity drain of the water on top of the steel containment. The roof, 2 ft thick, rests on the cylindric shield building wall with 16 reinforced concrete columns, 5 ft high and spaced circumferentially to leave 16 openings, 16 ft wide. A flat shield plate is suspended from the chimney lower end.

Heat removal by the PCCS is initiated automatically in response to a high containment pressure signal, and, with the exception of the initial actuation, requires no active components or electrical power to perform its safety function. Also manual actuation can be accomplished by the operator from the main control panel or the safety grade shutdown control panel.

As shown in Fig. 4.3.1-2, actuation of the PCCS initiates water flow by gravity from a tank contained in the shield building structure above the containment onto the containment dome outer surface forming a water film over the structure. The path for the natural circulation of air upward along the outside walls of the containment structure is always open. Heat is then removed from the containment, utilizing the steel containment structure as the heat transfer surface combining conductive heat transfer to the water film, convective heat transfer from the water film to the air, radiative heat transfer from the film to the air baffle, and mass transfer (evaporation) of the water film into the air. Connections are provided to an alternate water source such as the fire protection system to provide longer term (> 3 days) capability of containment external spray. Higher air temperature in the space between the containment wall and the air flow buffle compared to the air inlet annulus guarantees natural circulation air cooling of the containment surface or the water film.

Passive Safety Injection System

The purpose of the passive safety injection system for AP600 is to protect the plant against leaks and ruptures of the reactor coolant system and to provide effective core cooling for various break sizes and locations. It is designed so that no operator action is required for either small or large pipe breaks. When makeup water is needed, it is provided naturally. In the event of a serious accident, the entire lower portion of the containment would be under water and circulation of the coolant by boiling and condensing would remove the decay heat.

The system is shown in fig. 4.3.1-3. It consists of three passive sources of water to maintain core cooling; each of them is directly connected to two nozzles on the reactor vessel to reduce the possibility of spillage. (Similar connections have been used on standard 2-loop plants). Two core makeup tanks (CMTs), each containing 125,000 lbs of borated water, are located inside the containment just above the reactor coolant system (RCS) loop. Relying just on gravity, their purpose is to make up any core coolant loss due to minor leakage for extended periods.

If RCS pressure or water level were to drop abnormally, an air-operated "fail-open" globe isolation valve would automatically open and natural gravity would trigger the injection flow from the CMTs to the RCS over a connecting line.

Two pressurized accumulators, each with 105,000 lbs of water and powered by compressed nitrogen, would supply additional water in the event of larger leaks or a drop in RCS pressure below 700 psig. If the largest RCS pipe was completely severed, for example, the accumulators would respond by rapidly refilling the vessel downcomer and lower plenum.

The third water source is the in-containment refueling water storage tank (IRWST), located inside the containment above the RCS loop. It alone holds 2.9 million lbs of water, more than ten times the amount of water in the reactor coolant system (280,000 lbs). Designed at atmospheric pressure, the RCS would have to depressurize before IRWST injection can occur. The RCS can be depressurized automatically to 10 psig, at which time the water in the IRWST would overcome the residual resistance and the slight pressure loss in the injection lines.

During a major LOCA the IRWST would provide coolant flow for at least 10 hours. As it neared empty, the water level in the containment would more than cover the RCS loop.

These passive safety injection systems encompass four stages of automatic depressurization. All stages are activated by the CMTs, using 2-out-of-4 logic to ensure reliability and prevent mistaken triggering.

Supply water to the CMTs, accumulators and IRWST is by gravity flow from a tank located on top of the containment shield building. This water tank holds a three-days supply, after which time the tank would be refilled to help maintain the low containment pressure that would result from a serious accident.

The number of components required for AP600's safety injection systems are greatly reduced from the number required in today's 2-loop plants, as can be seen from the following table:

Component	Standard 2-Loop PWR	AP600
Pumps	4	0
Tanks	5	5
Remote Valves	85	28
Safety Diesels	2	0

4.3.1.6 Other Features

The Instrumentation and Control Systems are based on modern but proven technology. Features of these systems include microprocessor based technology, film-optic data highways, advanced alarm, operating display and accident monitoring display systems.

One important goal of the AP600 is simplification in the design. The vendor quantifies the success in this respect giving the reduction in number or size of components, related to the nuclear island in comparison to a standard 2-loop PWR.

60 % fewer valves

35 % fewer pumps

75 % less pipes

80 % less ducting for heating, cooling and ventilation

50 % less seismic building volume

80 % less control wiring.

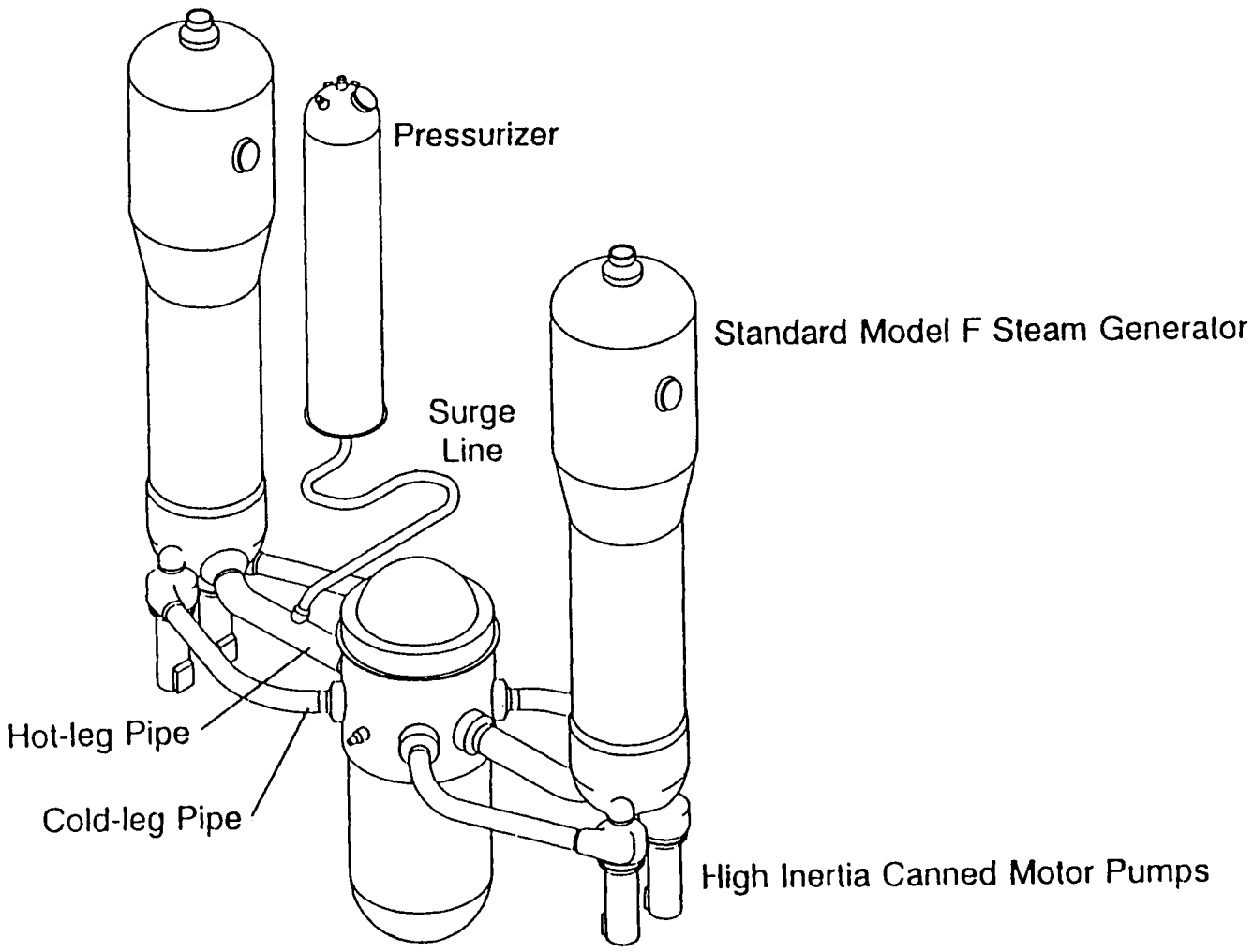

Fig. 4.3.1.-1: AP600 Main coolant system

Fig. 4.3.1.-2: AP600, Containment general layout

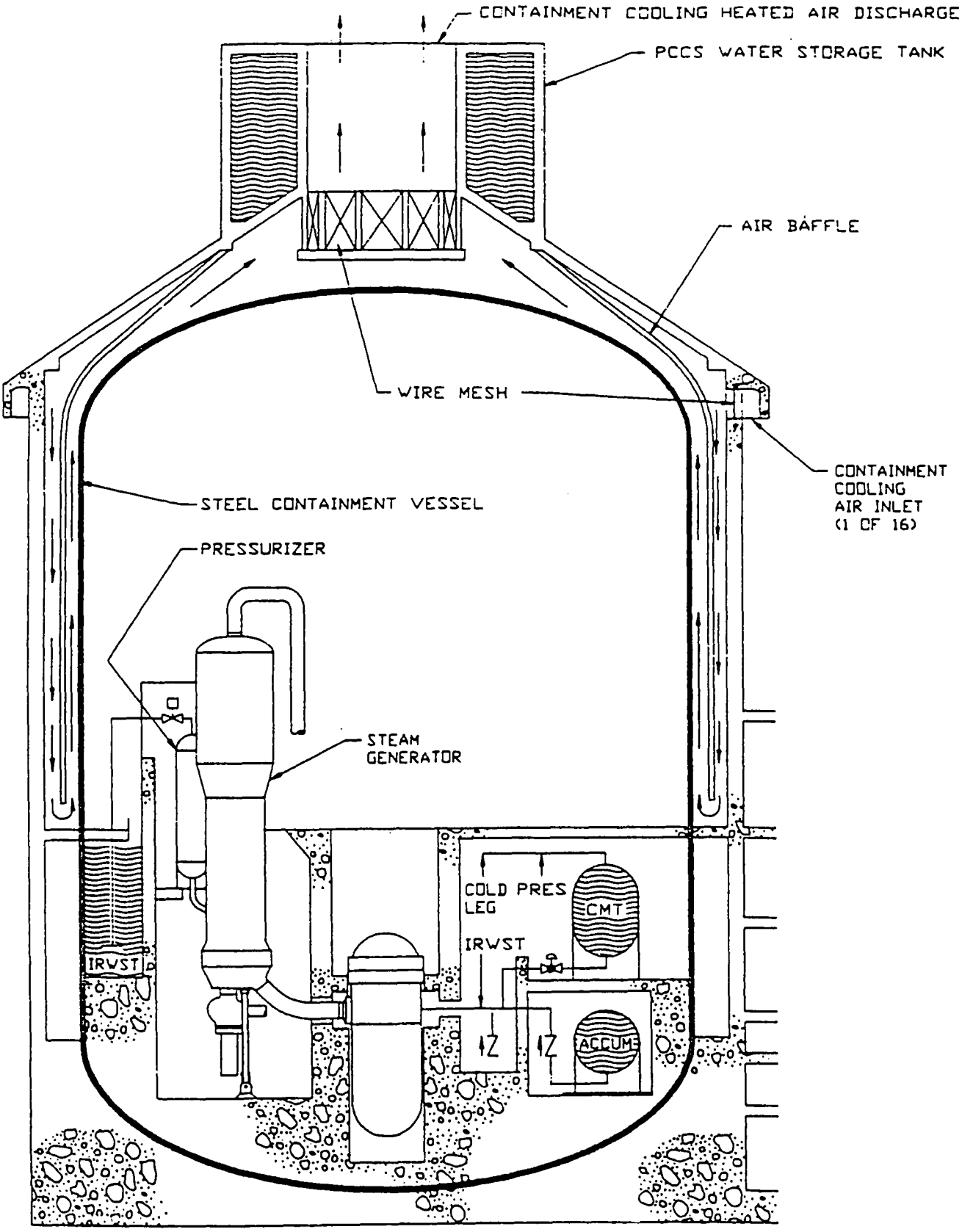

Fig. 4.3.1.-3: AP600 - Passive safety injection system

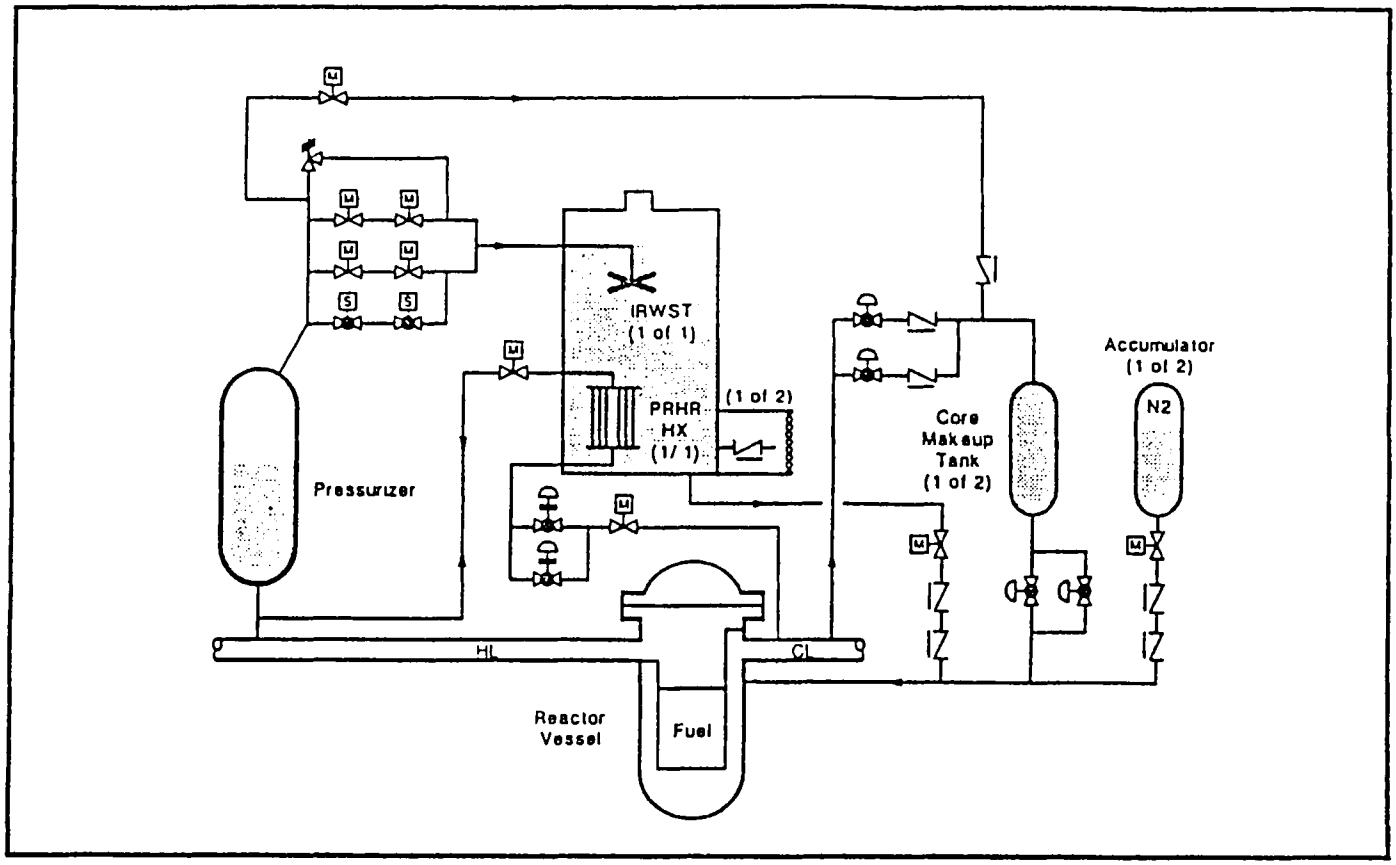

4.3.2 Advanced PWR Containment Design (Germany)

An important safety requirement is the drastic reduction of radioactive releases after accidents with severe core damage (beyond design accidents). A further step is the aim at a deterministic exclusion of catastrophic consequences to the public after the most severe beyond design accident sequences (core melt-through of the reactor pressure vessel, steam explosion and/or hydrogen detonation).

Design concepts with the aim at fulfilling those ambitious requirements have to provide new containment functions, while changes in the design of the nuclear steam supply system are of lower importance.

In Germany conceptional design work for an advanced containment is underway for Pressurized Water Reactors. The main design requirements and features of this concept are described briefly /4.3.2.-1, 4.3.2.-2/. The containment has to fulfill three functions:

a) For the very improbable (beyond-design) case of core melt the release of radioactivity to the environment must be limited to negligibly small amounts.

b) No catastrophic failure of the inner steel shell of the outer containment should occur and the outer concrete wall must maintain its integrity and impermeability to the molten core.

c) The containment must withstand external events of low probability such as airplane crashes, earthquakes and gas cloud explosions (current requirement in Germany).

A design which fulfills the requirements has to take into account the following phenomena and processes:

- Dynamic loads from hydrogen
- Static overpressure loads on the outer containment due to internal energy releases (hydrogen deflagration, steam production due to stored heat and decay heat of the core debris etc.)
- Dynamic forces during reactor pressure vessel melt through at high coolant system pressure

- Steam explosion
- Basemat erosion
- Bypass leaks to the environment.

Figure 4.3.2-1 illustrates a conceptual containment design taking into account the phenomena and requirements mentioned above. This conceptual containment consists of a steel shell and strong prestressed concrete structures and is currently designed to withstand an internal static pressure of 2 MPa and a dynamic impulse of 0.2 MPa-s (hydrogen detonation). The rocket-like behaviour of the vessel must be taken into account when designing the RPV support structure. Impact loading of inner containment structures is caused by moving parts of the vessel, while the actuating pressure is caused by the expansion of the water steam mixture. It can be shown that the kinetic energy of the upward moving vessel head can be absorbed by unbonded prestressed cables that are anchored into the very stiff, hollow-box-type structure formed by the integrated core catcher and the resulting concrete structure on the ground floor.

Figures 4.3.2-1 and 4.3.2-2 depict the conceptual design of a core catcher system that withstands high pressure and basemat erosion. A heavily latticed concrete structure in the upper part of this core catcher cellar is designed to absorb the kinetic energy of the downward moving end-cap missile from the pressure vessel, thus preventing the early destruction of the core retention device located in the lower part of the containment. The molten core is cooled by water evaporation. For this purpose, a water/vapour circulation system is introduced to operate completely inside the outer containment. With this design, the heat from the molten core is transferred to the steel shell of the outer containment and then dissipated by natural air convection through the chimney formed between the steel shell and the outer concrete shell of the containment. Other design variants to remove the afterheat from the inside of the outer containment are under consideration.

The composite concrete-steel wall system shown in Figure 4.3.2-1 reacts to close the gap between the steel shell and the outer concrete walls when the increasing pressure inside the containment causes the steel to approach the yield limit.

Fig. 4.3.2.-1: Conceptual design of advanced PWR containment

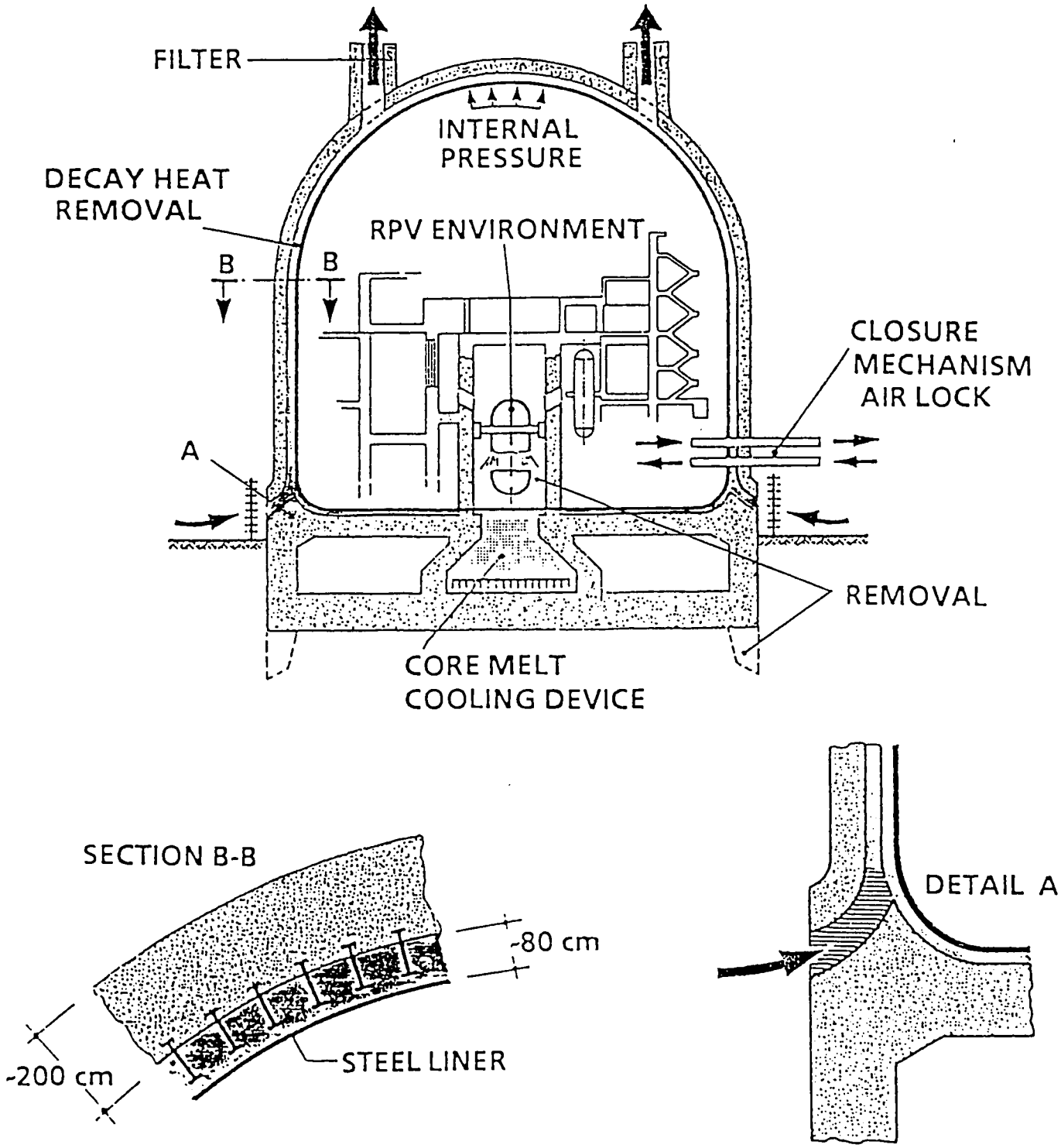

Fig. 4.3.2.-2: Concept for molten core cooling and retention device

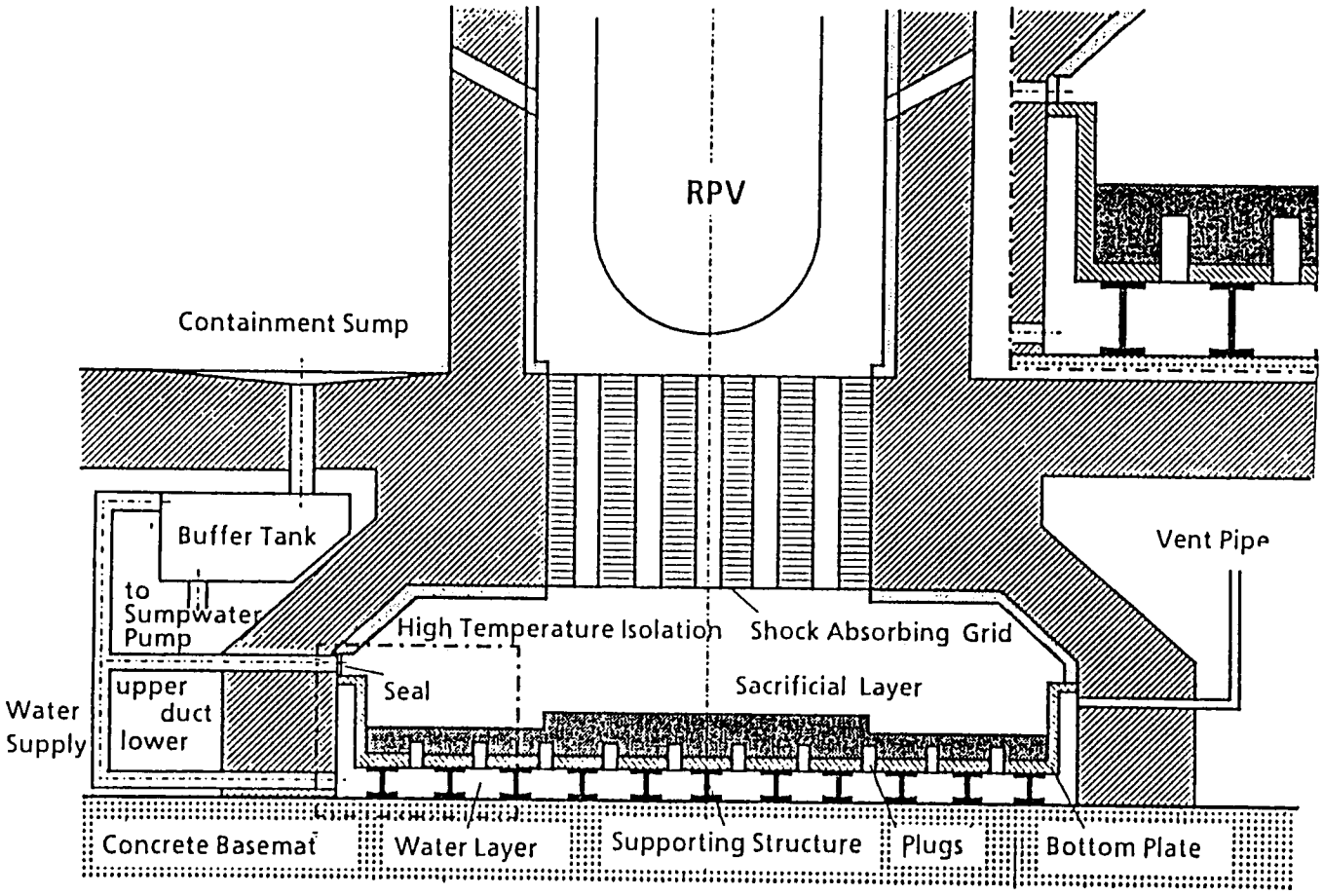

4.3.3 SBWR

4.3.3.1 General

SBWR (Simplified Boiling Water Reactor) is a design concept developed by GE with the cooperation of other US and foreign partners (especially from Italy, The Netherlands and Japan). Special emphasis is laid on utilizing passive safety system features and simplifying the entire design to the largest possible extent. Characteristic plant data are /4.3.3.-1 to 4/:

- Electric power 600 MW
- Thermal power 1800 MW
- Number of recirculation pumps 0
- System pressure 7,2 MPa
- Refueling cycle 24 months

4.3.3.2 Core

Main core design change is a lower power density of 42 kW/l (compared to about 50 kW/l for conventional BWRs). It is designed to use any standard BWR fuel.

4.3.3.3 Reactor Pressure Vessel and Cooling System

The SBWR reactor pressure vessel (RPV) is 24 m high and has a diameter of 7 m, except at the bottom where it is 6 m (see fig. 4.3.3-1).

The RPV height is a key factor in establishing the required natural circulation core flow. Core flow is enhanced by incorporating a "chimney" in the space between the top of the core and the steam separator assembly. The diameter is wider at the top to increase the water inventory above the core. The diameter is smaller at the bottom to reduce the volume of water needed to be replaced to provide core cooling.

The large reserve of water above the core translates directly into a much longer time being available before core uncovery can occur as a result of feed flow interruption or a loss-of-coolant accident. This means that there is ample time for the automatic sy-

stems or the plant operators to re-establish reactor inventory control using any of several non-safety-related systems. Timely initiation of these systems will preclude initiation of the emergency safety equipment. This easily controlled response to loss of normal feedwater is a significant operational benefit. In addition, the larger RPV volume leads to a substantial reduction in the SBWR pressurization rate that would occur after a rapid isolation of the reactor from the normal heat sink. This characteristic permits considerable simplification of the pressure relief equipment.

As mentioned above the SBWR operates without main coolant recirculation pumps. Heat is removed under all conditions by natural circulation.

Design simplification efforts have led to the SBWR having only four conventional pneumatic/spring-actuated safety relief valves (SRV) to provide over-pressure protection, whereas existing plants can have as many as 20. This reduction is possible because of the low rate of pressure increase for the SBWR reactor system following upset events.

Furthermore, there is ample time during which operator actions can be initiated. This will terminate a reactor pressure increase below the SRV lifting setpoints.

Operation of the Gravity Driven Cooling System (GDCS) requires reactor depressurization. This depressurization is accomplished with six depressurization valves (DPV) located on the steam pipes in the upper drywell. Squib valves were selected for the DPV function.

4.3.3.4 Containment

The containment structure and the location of different safety systems and components are shown in figure 4.3.3-2. The description of the various systems is given in the following section.

4.3.3.5 Engineered Safety Features

The design is characterized by providing passive safety system functions to a large extent. Those systems are gravity driven emergency core cooling system (GDCS),

passive residual heat removal system (isolation condenser, IC), and passive containment cooling system (PCCS).

Gravity Driven Core Cooling System (GDCS)

In the event of a loss-of-coolant accident (LOCA), the SBWR core will not experience uncovery or fuel heat-up due to loss of reactor coolant inventory, this is achieved by:

- Eliminating all large nozzles from the lower region of the RPV
- Providing a large inventory of water in the RPV region above the core
- Depressurizing the reactor in the event of an accident to near ambient conditions
- Flooding the reactor with low pressure gravity-driven flow from the elevated pools located in the containment.

Following completion of the blowdown/flooding sequence, there is sufficient water in the GDCS and suppression pools to flood the entire containment to a height of at least one meter above the top of the active core. Consequently, the core will remain adequately cooled for an indefinite period following a LOCA.

Isolation Condenser System (ICS)

The function of the Isolation Condenser System is to remove decay heat when the reactor becomes isolated during power operations as a consequence of a transient; the system shall control reactor coolant pressure and temperature within a range so that Safety/Relief Valves will not lift and automatic reactor depressurization will not occur. These functions, when the Isolation Condenser System has come into operation, are to be performed in a completely passive way with no need of both operator actions or control and external AC power sources or forces. The vendor states that the isolation condenser system is not defined as an "Engineered Safety Feature" since other ESFs provide reactor protection and incident mitigation should the ICS be unavailable. The system, however, is designed as a safety related system to prevent unnecessary reactor depressurization and operation of Engineered Safety Features.

The ICS consists of three independent loops, connected directly to the steam region and the downcomer region of the reactor pressure vessel; they provide core heat removal relying on natural circulation to transfer residual heat outside containment

through heat exchangers (IC condensers) immersed in water pools vented to the atmosphere. Each loop is designed for 30 MW heat removal capacity; three loops are provided to obtain the required system capacity (60 MW) and redundancy.

Figure 4.3.3-3 is a simplified diagram of a typical ICS loop. A single steam supply line connects the reactor vessel to each IC unit, placed in a large pool of water outside the containment at a higher elevation. On the run of the steam supply line, inside the containment boundary, are located two normally-open isolation valves in series; the line vertically penetrates the containment roof slab and, up to the connection to the IC unit, is enclosed in a guard pipe in order to avoid any large steam-LOCA outside the containment. On the condensate return piping, also located inside containment, are provided two normally-open isolation valves in series and, just upstream the reactor vessel entry point, a loop seal and a pair of condensate-return valves in parallel. These two valves are closed during normal power operation and since the steam supply line valves are normally open, condensate will fill the IC unit up to the steam distributor above the upper headers.

On a high reactor pressure signal or a main steam line isolation signal one condensate-return valve in each loop opens starting the ICS into operation; the condensate inside the IC units is drained into the reactor vessel downcomer and the steam-water interface in the IC tube bundle moves downward, below the lower headers to a point in the main condensate return line.

When non-condensable gases build up in the condenser, vent valves open and the gases are routed to the suppression pool.

Passive Containment Cooling System (PCCS)

The Passive Containment Cooling System funtion is to remove decay heat from the containment after a loss of coolant accident, maintaining the containment pressure within the design limits.

The containment heat removal function shall be provided for a minimum of 72 hours, in a passive way, without any external intervention by support systems or operators.

The passive containment cooling system consists of two independent loops open to the primary containment, connecting the drywell with a steam condenser (the Passive Containment Cooling Condenser) located outside the containment in a large pool of water vented to the atmosphere. Figure 4.3.3-4 is a simplified diagram of a typical loop. The condenser receives a steam-gas mixture directly from the drywell through a central supply line which penetrates the containment roof slab vertically and has no isolation valves.

Steam is condensed inside the vertical tubes of the PCC condenser and drained to the Gravity Driven Cooling System pool located inside the containment drywell. On the drain line and submerged in the GDCS pool, just upstream of the discharge point, is a loop seal: it prevents back flow of steam and gas mixture. Non-condensible gases are routed to the suppression pool in the wetwell through a vent line, which, like the drain line, has no valves.

The Passive Containment Cooling System, therefore, is always in a "ready standby" condition. Its safety function is initiated by the pressure increase in the drywell due to the loss of coolant accident itself, the difference in pressure between drywell and wetwell initially provides the driving head for the steam-gas mixture flow through the condenser. Then condensation promotes the steam flow causing a local pressure reduction and drainage of condensate to the GDCS pool relies on gravity. The PCCS is therefore a completely passive safety related system

4.3.3.6 Other Features

The vendor states that the design also retains several non-safety grade motor-driven systems as backup to the passive system.

The control rod drive system is diverse (electric-hydraulic), similar to that of the ABWR. The Instrumentation and Control System is digital, signal and data transmission is by multiplexing.

The following safety grade equipment of standard BWRs is eliminated in the SBWR: Diesel generators, ECCS pumps, cooling water systems, standby gas treatment system.

Fig. 4.3.3.-1: SBWR, Reactor pressure vessel and internals

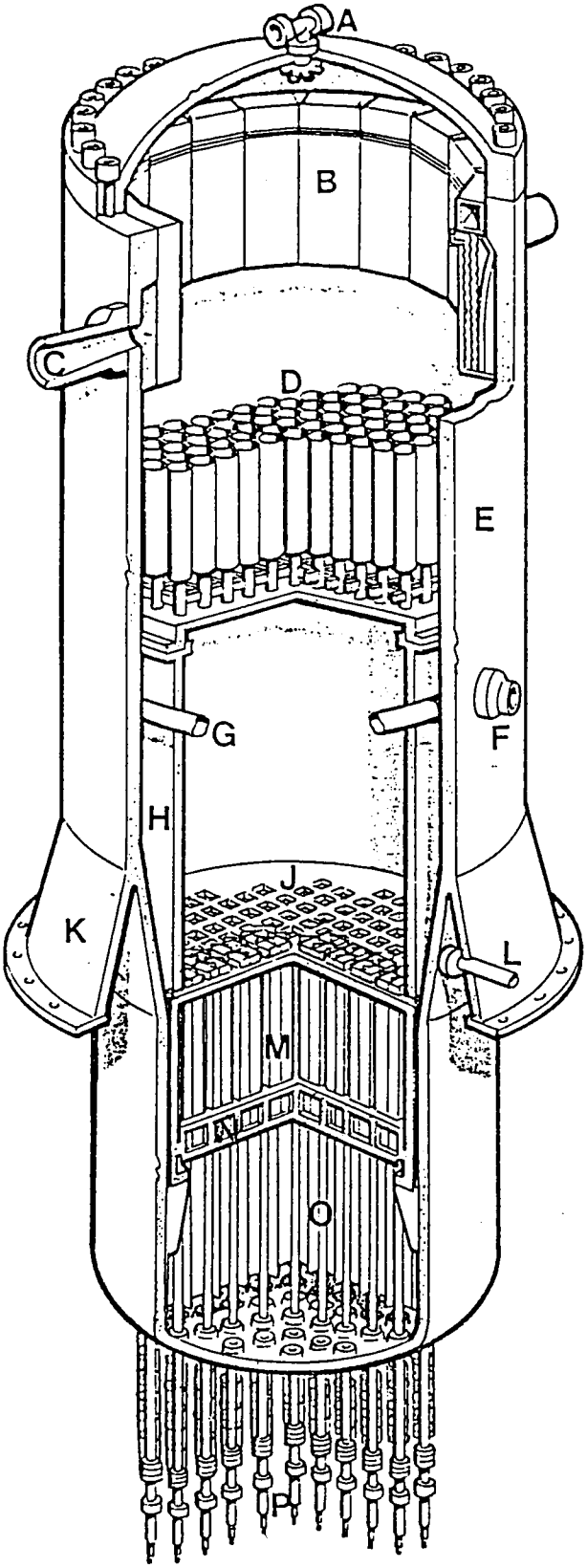

A	Top head	K	Support skirt
B	Steam dryer assembly	L	Gravity driven cooling system inlet nozzle
C	Main steam nozzle	M	Fuel assemblies
D	Steam separators	N	Core plate
E	Reactor pressure vessel	O	Control rod guide tubes
F	Feedwater inlet nozzle	P	Fine motion control rod guides
G	Feedwater sparger		
H	Chimney		
J	Core top guide plate		

Fig. 4.3.3.-2: SBWR, Simplified safety systems and their location in the containment structure

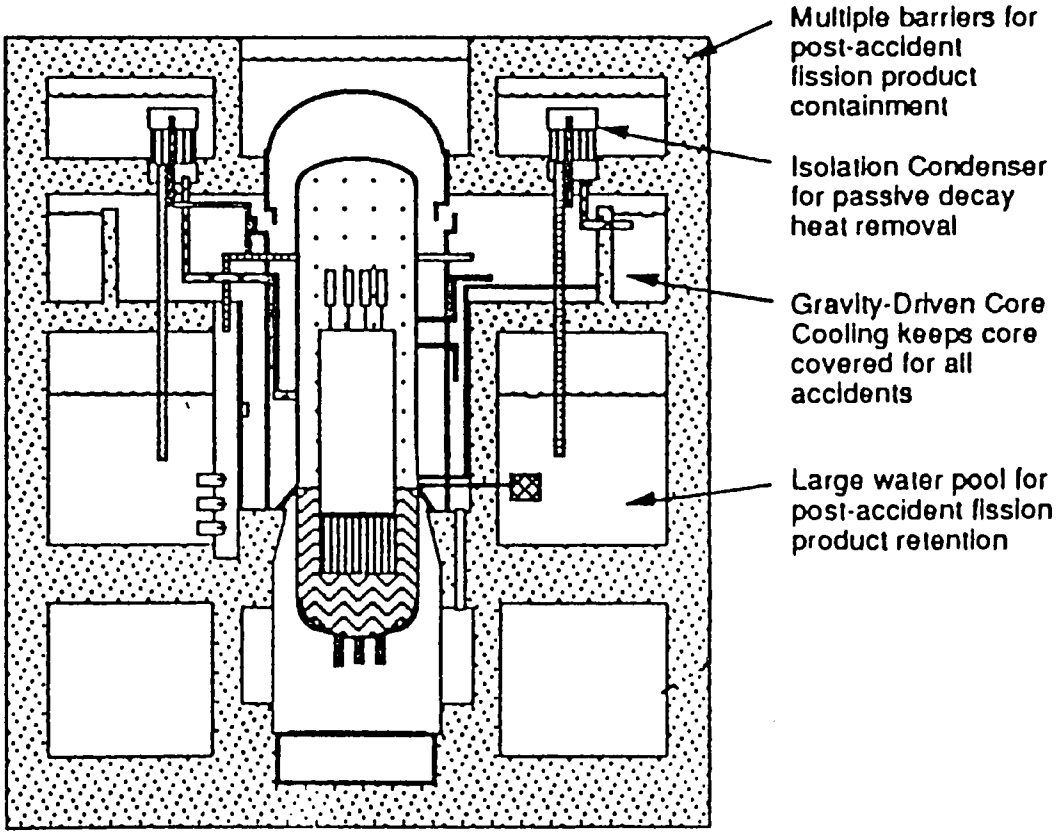

Fig. 4.3.3.-3: SBWR, Isolation condenser

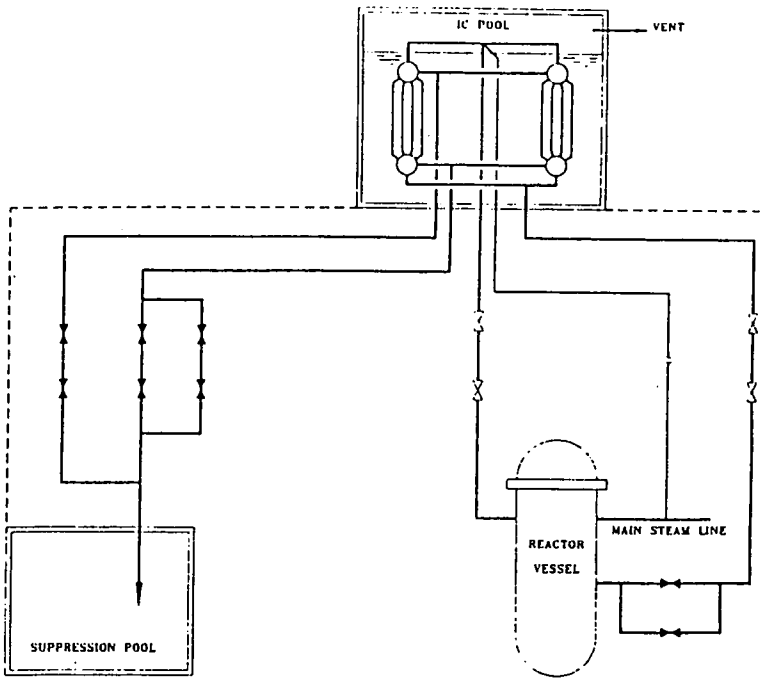

Fig. 4.3.3.-4: SBWR, Passive containment cooling system

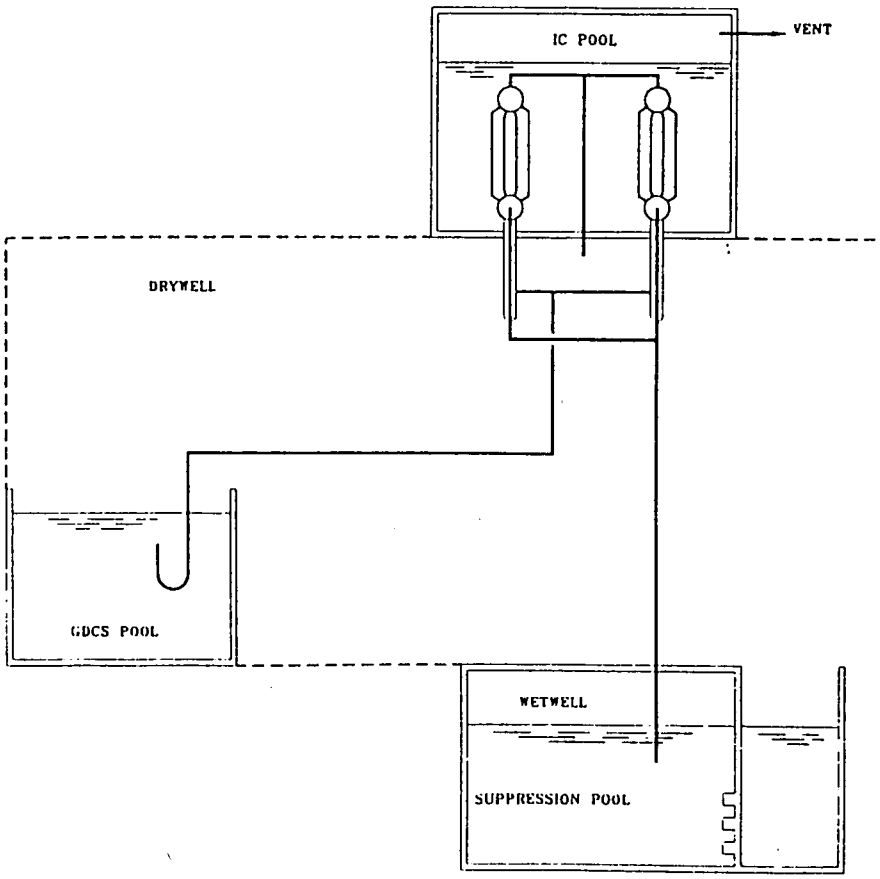

4.3.4 Additional Concepts

Worldwide there are additional conceptual studies on medium size advanced LWRs with passive system features. In most cases the known design features are less detailed than for the concepts described above. However, it is important to mention these concepts which may reach a more detailed design stage in the future.

- The B600 PWR is a Babcock and Wilcox concept of a 600 MWel plant with passive features such as emergency decay heat removal, emergency feedwater storage tanks and containment natural circulation air cooling /4.3.4.-1/.

- Japanese vendors have "simplified" medium size concepts for both PWRs and BWRs. MS-300 and MS-600 are PWR concepts of Mitsubishi with 300 MWel and 600 MWel power. The "simplified" concept of Hitachi is the HSBWR, a Boiling Water reactor of 600 MWel /4.3.4.-2/.

- A USSR design concept of a large size advanced PWR with passive safety system features is being developed under the name V-410 /4.1.7.-1/.

4.4 Innovative Concepts

4.4.1 PIUS

4.4.1.1 General

The process inherent ultimate safety (PIUS) reactor is a 600 MWel pressurized water reactor based on a concept developed and verified at ABB Atom during the last 10 years. It is designed to eliminate any possibility of a core degradation accident. Its basic design feature is a core, that is openly connected in a natural-circulation circuit to a large pool of highly borated water. This pool is kept in place by a prestressed concrete pressure vessel provided with redundant leakage barriers. The coolant pumps are operated so that there is hydraulic balance in the opening between the primary coolant loop and the pool. Therefore, the hot, low-boron primary loop water is kept separated from the pool water in spite of the always open natural-circulation path. In severe transients, such as loss of feedwater, this balance is affected, and pool water ingress occurs. Reactor shut-down and long-term residual heat removal are ensured without monitoring and active intervention. Thus, safety is independent of potentially failure-prone devices and cannot je jeopardized by mistakes or malicious human acts.

PIUS-600 main data are given in table 4.4.1-1. The information presented here is collected from several publications /4.4.1.-1 to 4/.

4.4.1.2 Core

The reactor core is an open, PWR type core made up of 213 fuel assemblies with standard PWR fuel rod diameter, reduced height, and arranged in an 18 x 18 square rod array with 16 Zirkaloy skeleton tubes system and five Zircaloy spacer grids. The 2000 MWth core is located near the bottom of the reactor pool which is a high-boron content water mass enclosed by a prestressed concrete vessel. The PIUS reactor core does not use control rods, neither for reactor shutdown, nor for power shaping. The reactivity control is accomplished by means of coolant boron concentration control - chemical shim - and temperature control.

The core data (table 4.4.1-2) are significantly relaxed in comparison with current PWR practice in terms of average linear heat load, temperatures, flow rates and associated pressure drops. The reactivity compensation for burnup is accomplished by means of a burnable absorber (gadolinium) in some of the fuel rods, and the moderator temperature reactivity coefficient is strongly negative (in the range of -30 to -50 x 10-5 $\Delta k/k$ per degree) throughout the operating cycle.

4.4.1.3 Reactor Pressure Vessel and Coolant System

The large prestressed concrete reactor vessel has a total height of 43 m and a width of about 27 m. The cavity, containing a pool of 3300 m^3 of water with a boron content of about 2200 ppm has a diameter of 12 m and a depth of about 38 m and is provided with a stainless steel liner on its inside. The core is located near the bottom of the reactor pool (see fig. 4.4.1-1).

The pool water is cooled by two systems; one with forced circulation through out-of-vessel heat exchangers and one with entirely passive function, utilising natural water circulation and dry, natural-draft cooling towers. The passive system ensures the pool cooling in accident and station blackout situations and prevents boiling of the reactor pool water inventory. In the hypothetical case that all pool cooling systems fail, the water inventory ensures the core cooling for a protracted period of time (seven days).

From the reactor core, the heated reactor coolant passes up through a riser pipe, at a temperature of 290°C, and leaves the reactor vessel through nozzles on the sides of an upper plenum. The coolant continues in four hot leg coolant pipes to straight once-through steam generators, mounted on two sides of the concrete vessel. The main coolant pumps are located below and structurally integrated with the steam generators. The pumps are sized-up versions of the glandless, wet motor design pumps that have been successfully utilized as recirculation pumps in BWR plants.

The cold leg piping enters the reactor vessel through nozzles in the upper plenum at the same level as the hot leg nozzles, and the 260°C return flow is directed downwards to the reactor core inlet via a downcomer. On its way down, the flow is accelerated, and there are open connections between the downcomer and the pressuriser providing a siphon breaker arrangement. The siphon breaker serves to prevent sipho-

ning off the reactor pool water inventory in the hypothetical event of a cold leg pipe rupture. During normal operation, the siphon breaker does not affect the water circulation. At the bottom of the downcomer, the return flow enters the reactor core inlet plenum.

A one metre diameter pipe that is open to the enclosing reactor pool is located below the core inlet plenum. A tube bundle arrangement inside this pipe minimises water turbulance and mixing and ensures stable layering of hot reactor loop water on top of the colder reactor pool water. This pipe, with the bundle arrangement and the stratified water, is called the lower "density lock" and is one of the special components required to implement the basic design philosophy. The position of the interface between hot and cold water is determined by temperature measurements, and this information is used for controlling the speed, and hence the flow rate, of the main coolant pumps. There is another "density lock" arrangement at a high location in the pool, connected to the upper riser plenum. This reactor configuration, with the two continuously open density locks connected to the high-boron-content pool water, provides the basis for the PIUS principle.

During normal plant operation, this natural circulation from the pool, through the lower density lock, to the core, up the riser, through the upper density lock and back to the pool, is kept inactive by controlling the speed of the main coolant pumps. In case of a severe transient or an accident, the natural circulation flow loop is established, providing both reactor shut-down and continued core cooling.

The nuclear steam supply system is enclosed in a containment structure, in a similar way as other LWRs, and this is in turn partly enclosed in a reactor building. Pools for storing spent fuel and for reactor internals during refuellings are arranged in the reactor building, on top of the reactor containment. The containment and the fuel pool portion of the reactor service room are designed with sufficient strength to provide protection against a crashing aircraft.

4.4.1.4 Containment

The PIUS reactor is provided with a containment that encloses the reactor concrete vessel, the reactor coolant loops with steam generators and the RCPs, as well as

other high-pressure, high temperature reactor systems and components. The containment is of the pressure suppression type used in all ABB Atom BWR plants. It is made of concrete with an inner steel liner to ensure adequate tightness.

The PIUS plant has two major advantages over a conventional LWR in terms of tightness and cooling requirements of a containment. First, core damage protection in PIUS is provided by the passive self-protective design. It does not depend on active components or operator action, so no damage to the fuel occurs following an accident. The release of radioactive material to the containment, therefore, should be smaller than in conventional LWRs.

Second, following the initial depressurization of the reactor after a loss-of-coolant accident, the PIUS reactor is cooled by the passive long-term RHR system and no further escape of steam or radioactive material occurs to the containment. The short-term release of hot water and steam from the reactor is absorbed by the containment condensation pool. No long-term containment cooling systems are required.

4.4.1.5 Engineered Safety Features

- Residual Heat Removal Systems

Steam generators are used for normal residual heat removal (RHR). If they are not available, the decay heat is removed via the pool. The pool is cooled by conventional forced circulation cooling systems.

Passive natural-circulation cooling systems to the ambient air are used as a backup for long-term core cooling in case of total station blackout. The system, which is shown in fig. 4.4.1-2, consists of natural-convection coolers that are submerged in the reactor pool and connected via intermediate cooling circuits to natural draft cooling towers located at the top of the reactor containment.

- Density Locks

The density locks (upper and lower) are unique features of the PIUS design that minimize the mixing of primary coolant with pool water. The density locks consist of bund-

les of parallel open vertical pipes (1 m long) where hot primary coolant is stably layered above the cold borated pool water.

If the core outlet temperature becomes too high and the water density too low, particularly when there are steam bubbles in the water, the pumps will not longer be able to hold the hot/cold interface at the required level. In such a case, the borated pool water will enter the primary system and cause the reactor to shut down.

If the forced circulation flow is too large, primary system water will be expelled through the lower density lock and pool water will enter the system through the upper lock, also causing a reactor shut-down.

- Siphon Breakers

Outflowing primary loop coolant flashes to steam in the containment.

The hot leg pipe outflow stops when the water level in the vessel has dropped below the hot leg nozzle, and pressure equilibrium between the containment and the reactor vessel is established. The siphon breaker arrangement provides "containment" pressure also on the inside of the cold leg nozzle, and the large outflow from the reactor system stops - all by itself.

4.4.1.6 Other Features

The built-in safety greatly reduces the number and significance of safety grade systems. For example, the following safety grade systems can be deleted:

- Control rods and drives
- Safety grade electrical power
- Auxiliary feed water system
- High- and low-pressure coolant injection systems
- Automatic depressurization system
- Closed cooling water systems
- Containment spray systems

Core thermal power	2000 MW
Net electric power	640 MWe
Circulating water temperature	15°C
No. of fuel assemblies	213
Core height (active)	2.5 m
Core equivalent diameter	3.76 m
Average fuel linear heat rate	11.9 kW/m
Average core power density	72.3 kW/l
Core inlet temperature	260°C
Core outlet temperature (mixed mean)	290°C
Operating pressure (pressurizer)	9 MPa
Core coolant mass flow	13000 kg/s
Average burnup	45500 MW d/t
Equilibrium core ingoing enrichment	3.5 % (12 months)
Concrete vessel cavity diameter	12 m
Concrete vessel cavity volume	3300 m^2
Concrete vessel total height	43 m
Concrete vessel thickness	7-10 m
No. of steam generators and coolant pumps	4

Table 4.4.1-1: PIUS 600 Main Data

Operating pressure	90 bars
Fuel rod diameter	9.5 mm
Pellet diameter	8.2 mm
Average coolant temperature	275°C
Core active height	2.5 m
Power density	72 kW/l
Average fuel rod linear heat rate	11.9 kW/m^2
Average cladding heat flux	400 kW/m^2
Core coolant flow velocity	2.8 m/s
Core pressure drop	36 kPa

Table 4.4.1-2: PIUS core data

Fig. 4.4.1-1: PIUS reactor design

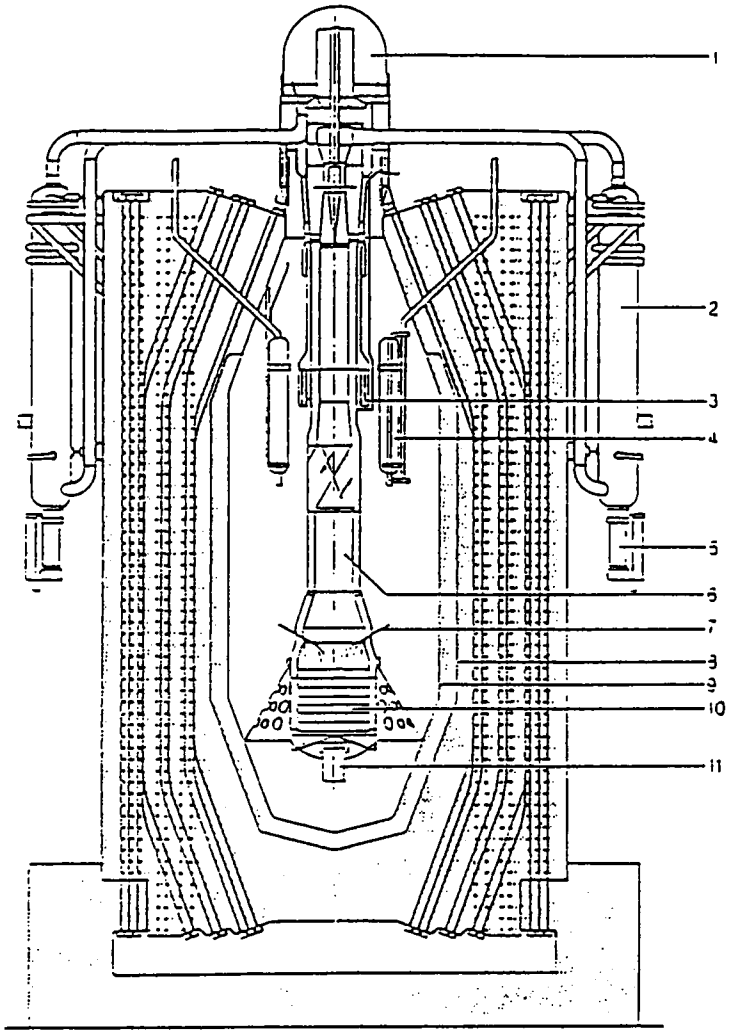

1 Steam volume in pressurizer
2 Steam generator
3 Upper density lock
4 Submerged reactor pool coolers, with secondary circuit cooled in natural circulation by ambient air
5 Recirculation pump
6 Riser
7 Core instrumentation
8 Embedded steel membrane
9 Vessel liner
10 Core
11 Lower density lock

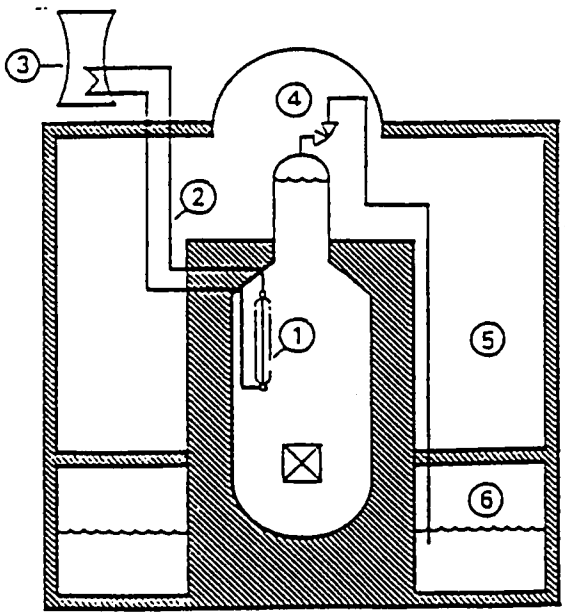

1. Immersed pool coolers
2. Secondary natural-circulation system for immersed pool coolers
3. Natural draft cooling towers for RHR
4. Safety valves with blowdown piping
5. Containment drywell
6. Containment wetwell with condensation pool

Fig. 4.4.1.-2: PIUS passive long-term RHR system

4.4.2 SIR™

4.4.2.1 General

The Safe Integral Reactor (SIR) project is a joint acitivity of four partners, ABB, Combustion Engineering, Rolls Royce, AEA Technology and Stone and Webster.

The SIR™ (named SIR in the following text) is a small integral PWR with passive-acting safety systems. This integral design has all the major components - core, steam generators, reactor coolant pumps and pressurizer - contained within a single large pressure vessel (fig. 4.4.2-1).

This reactor pressure vessel with its internal components is called a module because there is the possibility of combining two or more modules in one plant design.

Main data of the SIR module are /4.4.2.-1, 4.4.2.-2/:

- Electric power 320 MW
- Thermal power 1000 MW
- Main coolant pumps 6
- Refueling cycle 24 months
- Design life 60 years

4.4.2.2 Core

The SIR core design is based upon existing LWR technology and the fuel designs utilized in ABB-CE operating reactors. The core operates under subcooled, forced circulation coolant conditions, but differs from conventional PWR operation in the following respects

- soluble boron is eliminated in all operating modes
- average core power density is substantially lower.

Soluble boron free operation is accomplished by the use of proven burnable poisons to compensate for excess fuel reactivity throughout cycle, and by use of control element assemblies (CEAs) for reactor regulation and shutdown. The SIR™ design achie-

ves a large control worth by providing a CEA for each individual fuel assembly. The low average power density serves both to provide large core thermal margins during power operations (about 25 % higher than required) and to facilitate natural cooling under transient or shutdown conditions.

The core comprises 65 fuel assemblies of the 22 x 22 array design. Though not required for operation, a soluble boron system is provided as a diverse shutdown system in case of Anticipated Transients Without Scram.

4.4.2.3 Reactor Pressure Vessel and Coolant System

The Reactor Pressure Vessel (RPV) has an inside diameter of 5.8 m and a height of about 24 m including the closure head. As mentioned above, it houses all components of the main coolant system (see fig. 4.4.2-1 and 4.4.2-2).

The SIR reactor design features twelve cylindrical once-through steam generators (OTSGs) located above the core in the annular region between the core support barrel and the reactor vessel wall.

The OTSGs deliver superheated steam and require no separators. In the SIR design the secondary coolant is inside the tubes. Therefore the tubes are under compressive loads from the greater primary pressure, reducing the probability of tube rupture. The OTSGs have an outside diameter of 1.09 m, and 2728 straight tubes per steam generator, of length 8.5 m. The tubes and headers are fabricated from Inconel 960. Access for remote tube inspection and plugging is provided through the steam headers.

In the event of a tube leak, the affected SG can be isolated, and full power operation continued to the next scheduled outage using the remaining eleven units.

The pressurizer is located in the reactor vessel head, and is separated from the flowing primary coolant by an insulated base plate. Functionally, it is identical to the pressurizer of any other PWR, in that pressure is maintained above core outlet saturation pressure by the use of electrical heaters in a stagnant volume containing both saturated water and steam, and connected to the flowing region of the primary circuit by a surge connection. Transient overpressure is controlled by condensing steam in the pressurizer, by a spray of relatively cool water from the circulating region of the prima-

ry circuit. In a typical PWR this water is taken from the primary circuit pipework in the region of the reactor vessel inlet nozzles, and the surge connection is to the outlet region. The spray is thus driven by the reactor pressure drop, and it is necessary to control it by means of a spray line valve. In the case of SIR both connections are to the core outlet region. Spray is induced passively by an increase of pressure in the flowing region, relative to the pressurizer space. However, in order to prevent excessive flow through the surge connections starving the spray, there are fluidic diode devices in the surge connections, with their high pressure drop direction restricting flow into the pressurizer. Response to a reduction in the pressure of the main primary circuit is a flow out of the pressurizer through the diodes in their low pressure drop direction, together with an increase of the power of the heaters. The ratio of pressurizer volume to reactor power is about four times that typical of current designs of PWR.

Six reactor coolant pumps (RCPs) are horizontally mounted in the region above the SGs. They are derived from existing designs for BWR recirculation pumps, and are of the wet-winding glandless design, which eliminates the problems of conventional seals and their associated systems. In order to achieve required design values of the departure from nucleate boiling ratio in the core during transients induced by loss of pump power, it has been necessary to increase the intertia of the RCPs by incorporating an internal flywheel.

4.4.2.4 Containment

The SIR containment design utilizes an innovative, passive, modular pressure suppression system that requires no operator action to ensure containment integrity after a postulated accident. The containment (see fig. 4.4.2-3) consists of a Reactor Vessel Compartment (RVC) which houses the reactor pressure vessel and support structure, eight cylindrical steel pressure suppression tanks with external fins, each containing a pool of water, and a vent system that connects the RVC with the pressure suppression tanks.

The RVC is a steel-lined reinforced concrete cylindrical structure capped by a removable steel dome. A vent pipe connects the RVC to the cylindrical steel pressure suppression tanks. Each tank has a finned exterior surface to promote heat transfer to the ambient air. The pressure suppression tanks are housed within a reinforced concrete

structure which has outside air intake and discharge provisions for circulating ambient air.

The design pressure of the containment is 0.24 MPa and the design temperature of the RVC is 171°C. The design temperature of the suppression tanks is 116°C. The containment free volume and passive heat sink area are sufficient to limit the maximum pressure and temperature following an accident to less than these design values. The containment atmosphere is inerted to prevent hydrogen ignition.

4.4.2.5 Engineered Safety Features

Passive safety systems are (apart from the passive containment cooling system mentioned in the previous section):

- Emergency Coolant Injection System (ECIS)
- Secondary Condensing System (SCS) and
- Safety Depressurization System (SDS).

The Emergency Coolant Injection System (ECIS) consists of a steam injector taking suction from the suppression tanks and injecting coolant into the pressure vessel downcomer near the top of the steam generator. The steam injector is a passive device which uses a jet of high pressure steam to accelerate cold water from a low pressure source and thus create a high dynamic pressure. Two independent ECIS trains are provided.

The makeup function is to provide adequate inventory to prevent core uncovery as required for all design basis accident conditions and to provide vessel refill and level control so that decay heat removal systems can function properly in the long term recovery mode following an event.

The Secondary Condensing System (SCS) consists of the condensers, natural circulation condensing pool, charge tank, steam generator modules and the necessary piping and isolation valves. Four of the twelve steam generators are configured for decay heat removal. Each of the four steam generators has a separate condensing loop with two condensing pools per reactor.

The function of the Secondary Condensing System is to remove residual heat from the primary circuit coolant at hot conditions without requiring operation of supporting systems. Battery power is used to initiate the systems. Natural circulation is used to circulate the coolant in the condenser loop and through the secondary side of the steam generators within the reactor vessel. The condensing pool is the heat sink. It is sized to absorb a minimum of 72 hours of decay heat. Since the pool is outside of the primary containment, refill is also simple, thus extending the operating time indefinitey. Each condensing loop is designed to be able to remove decay heat and maintain the reactor coolant at a hot standby condition.

The Secondary Condensing System would be actuated in all events where the reactor coolant approaches a saturated condition, including LOCA. Except for automatic initiation by opening and closing valves, there are not active components in the system. Components are arranged for optimum natural circulation and gravity drain.

The Safety Depressurization System (SDS) consists of two sets of pipes and valves connecting the primary system to the suppression tanks. This allows the primary system to be depressurized and coolant to drain by gravity from the suppression tanks to the reactor vessel. The Safety Depressurization System also may be used in conjunction with makeup systems in a feed and bleed mode. This system has the capability for depressurization in severe accidents. It would only be used when all other coolant makeup systems (normal charging and emergency cooland injection) fail to operate. The safety depressurization system is manually initiated. The operator will have time to respond to an inadvertent actuation of automatically initiated systems without inducing an extended plant outage. Manual operation of the depressurization system is not required until after 72 hours for postulated events, therefore, sufficient administrative controls can be used to prevent inadvertent use.

Fig. 4.4.2.-1: SIR, reactor vessel and internals

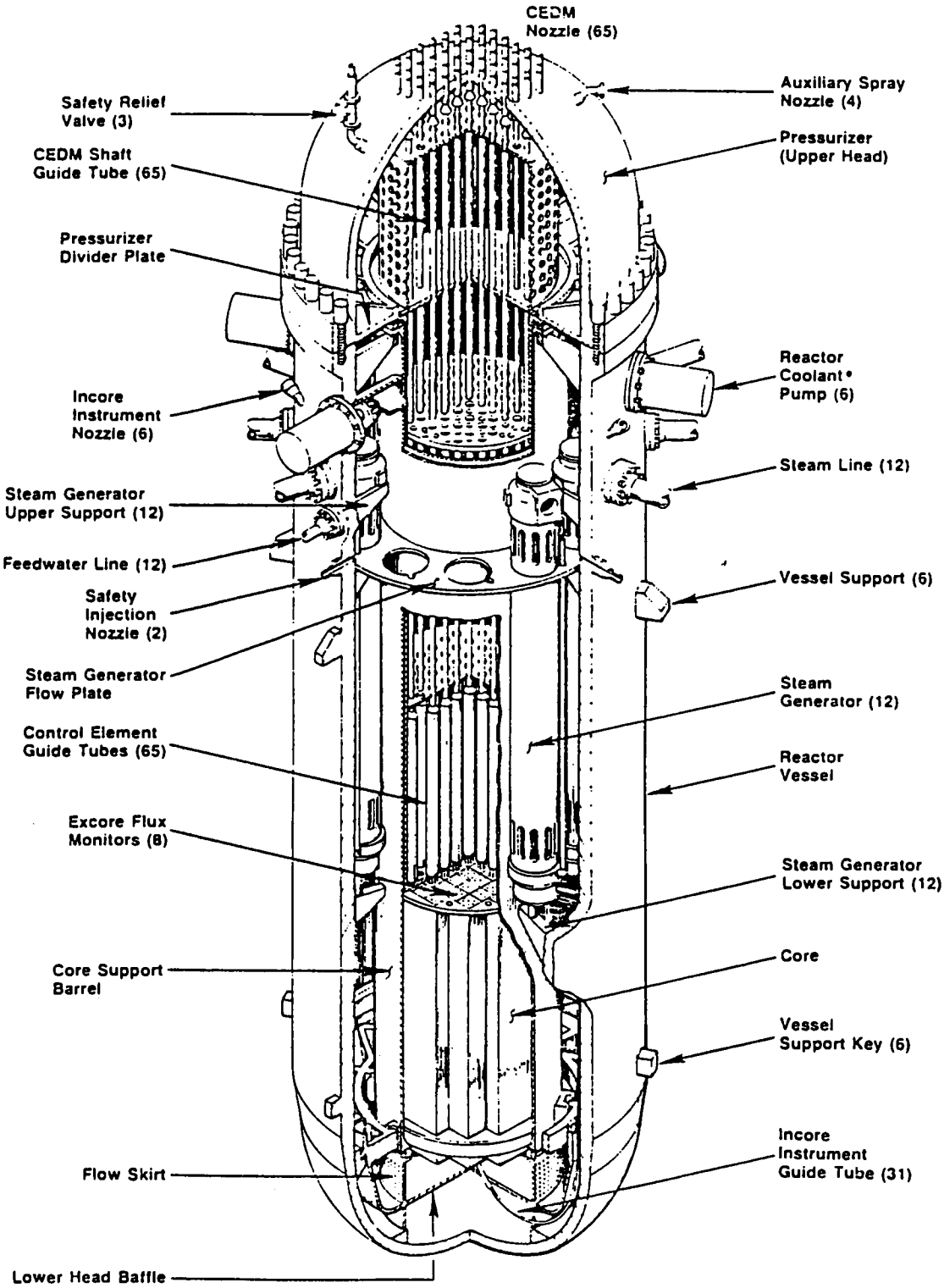

Fig. 4.4.2.-2: SIR, primary circuit flow paths

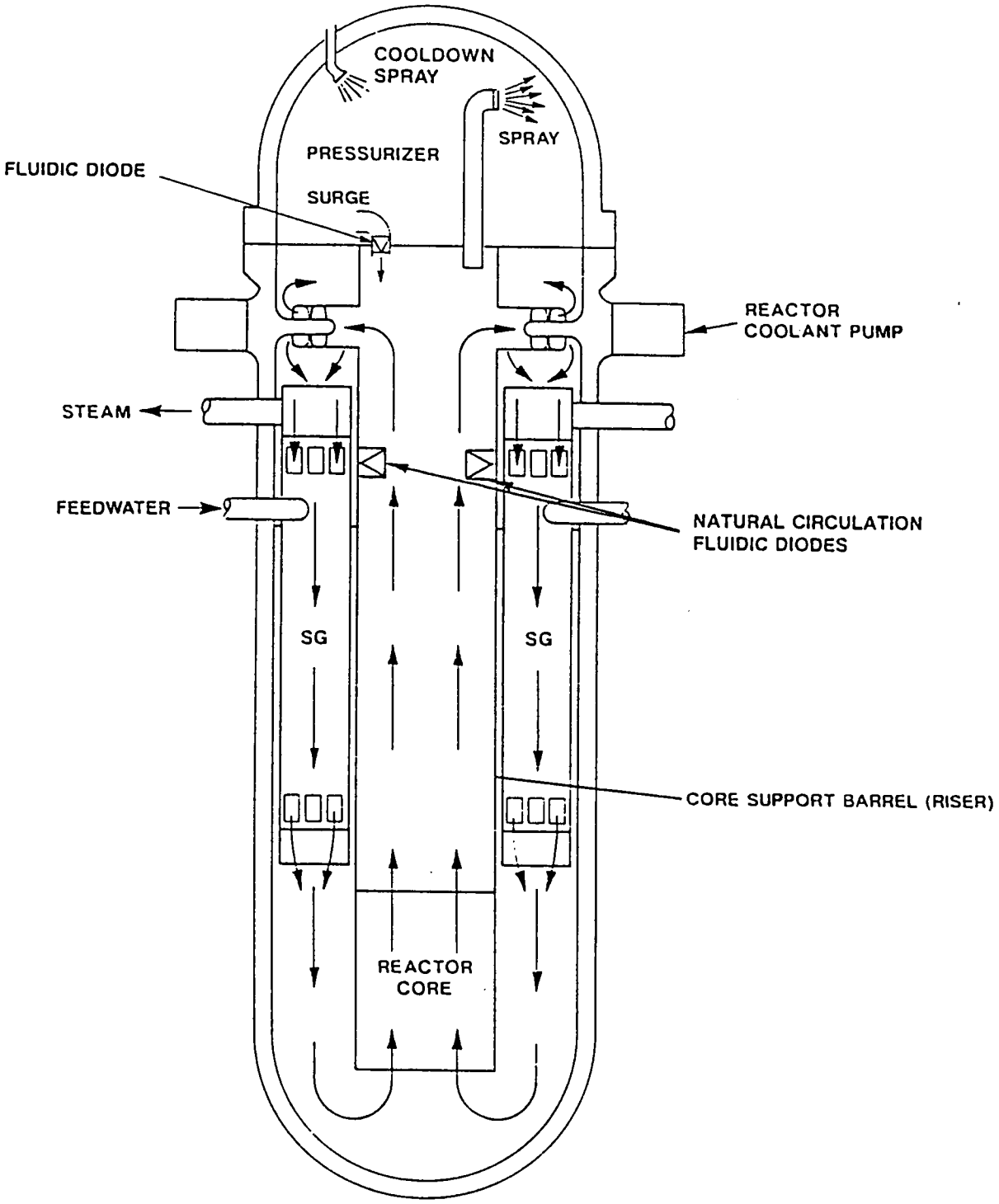

Fig. 4.4.2.-3: SIR, reactor containment boundary

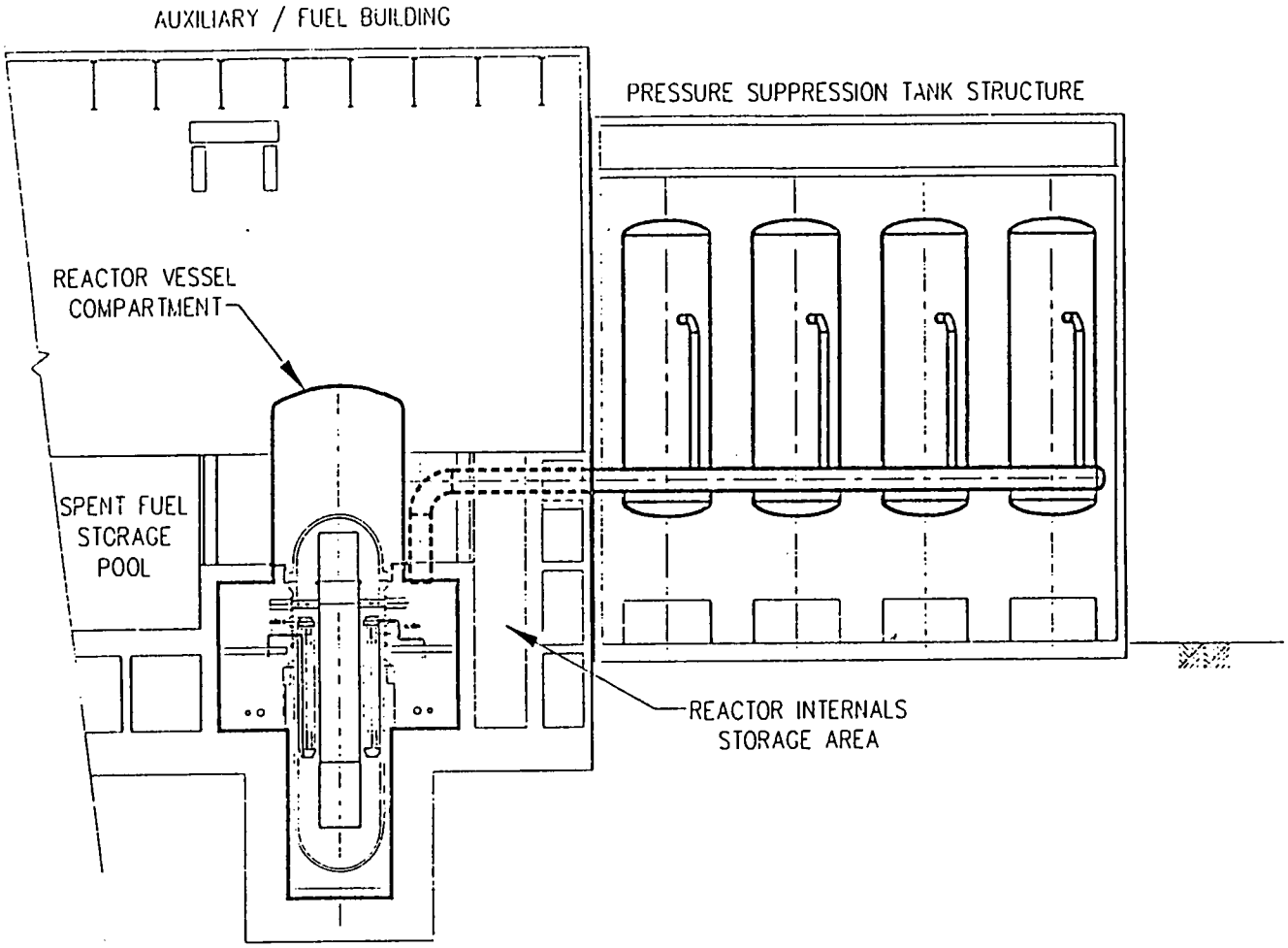

4.4.3 WPSPR 600

Some conceptual design studies are underway in the USSR. One of the concepts is the WPSPR 600 (Water Passive Safety Power Reactor), which is a highly integrated PWR. In this integral reactor system the main elements of the primary circuit (reactor core, once-through steam generators, steam and gas pressurizer, main circulation pumps) are installed inside its vessel.

The reactor core is composed of hexagonal fuel assemblies, the design of which is similar to that of VVER-1000 reactor, and is characterized by negative reactivity coefficients that ensure self limitation of the reactor power level in case of unplanned power or temperature increase.

A built-in steam and gas pressurizer ensures overpressure to guarantee sufficient subcooling in the system. It does not require electrical heaters. The once-through steam generator consists of 12 modules located in the annular space between the core barrel and the reactor vessel.

The reactor, equipment and piping of the primary circuit are located in a metal guard vessel designed to withstand pressure in case of loss of integrity. In addition the guard vessel houses the primary coolant purification system, passive liquid absorber system, emergency core cooling condensers and all other systems that are hydraulically connected to the primary circuit.

In case of loss of heat sink incidents, the plant is cooled by the passive heat removal system.

The passive heat removal system consists of four loops. Each loop is connected to one steam generator and transfers heat to an independent water heat exchanger located in the water storage tank. In case of loss of electricity supply the system switch-on valves are put into a position that ensures the system actuation. The heat removal from the reactor to the ultimate heat sink is guaranteed by a water storage tank with the water inventory necessary to ensure passive cooling during at least three days.

In case of severe accidents related to the loss of all external heat removal loops, including the postulated failure of the passive heat removal system, the reactor is cooled

down by the emergency core cooling system through emergency condensers located in the guard vessel. The condensers are actuated if the reactor pressure is increased after the operation of membrane devices that are installed in pipes connecting the condensers with the reactor. The steam from the reactor is condensed on the condenser surface, and the condensate flows back into the reactor under gravity. The heat from the condensers is transferred to the water storage tanks and air heat exchangers. After the evaporation of the water from the tank the heat removal will be carried out only by air heat exchangers during an indefinite period of time.

The reactor facility is located inside the containment, which is an additional protective barrier and serves mainly as a protection against external events, since due to the presence of the guard vessel there is no need to design it to withstand high pressure.

4.4.4 Additional Innovative Concepts

In addition to the two concepts described above, several innovative light water reactor concepts are known. In earlier publications some designs based on the PIUS-concept had been presented, such as SECURE and PIUS-BWR, however, the design which is being developed now is the PIUS reactor described in section 4.4.1.

Another concept which is based on the idea of PIUS is the 210 MWel ISER concept (Intrinsically Safe and Economical Reactors) developed under the leadership of the University of Tokyo /4.4.4.-1/.

The "Minimum Attention Plant MAP" of Combustion Engineering is a 300 MWel highly integrated PWR concept with all primary coolant system components being located in the reactor pressure vessel /4.4.4.-2/.

Another approach of a PWR with completely passive emergency shutdown and decay heat removal system is the MARS (Multipurpose Advanced Reactor, inherently safe) concept, developed at the University of Rome "La Sapienza" /4.4.4.-3/.

5 Classification of Safety Related Design Features

Safety improvement can be achieved in many different ways in an advanced design, depending on the state of the reference plant, the basic safety requirements and the development trends in safety philosophy.

In this section the attempt is made to classify the safety related design features of the advanced concepts into different classes according to the main objective of the improvement. To chose the different classes is a somewhat arbitrary process. Here, a classification in five classes has been made.

This does not imply any quality ranking. The idea is to specify classes which relate to different trends of the defense in depth concept. In addition, the trend of "innovative" designs with passive safety system features has been taken into account by introducing one class for those features. The five classes are listed in table 4.5.-1.

In this table the main safety features of the design concepts described in section 4 are listed and marked under certain classes. It is obvious that one particular design feature can be related to several classes when the design improvement has different effects.

In some cases the classification is difficult due to lack of necessary information. Often a design improvement is described without giving the reason for it. In some cases a clear classification is only possible upon the knowledge of analysis results.

A clear distinction between "Improved Incident Behaviour" and "Preventive Accident Management Measure" is often not possible because of lack of information, whether the relevant case is a design basis case or a beyond-design case.

For many plant designs, microprocessor based control and protection system functions are foreseen. These improvements have not been classified with respect to the safety effect. Lack of detailed information on these systems and their performance make it difficult to judge the degree and way of a safety improvement.

Despite of some uncertainties and deficiencies this classification is a helpful step towards an evaluation of safety concepts. These tables can give a first indication, in

which area of safety an advancement was made. The number of marks is not a safety ranking criterion for the different designs!

Table 5.-1: Classification of Safety Related Design Features

Plant/ Design Improvement	Reliability Enhance-ment	Improved Accident/ Incident Behaviour	Inherent and/or Passive Feature	Preventive A..M. Measure	Mitigating A.M. Measure
APWR 1300/1000					
Reduced power density		X			
Increased pressurizer and RPV volume above core		X			
Four train safeguard system, physically separated	X	X			
Installation of low head core reflood tank			X		
Separation between control and safety systems	X				
Steam generator overfill protection		X			

Classification of Safety Related Design Features					
Plant/ Design Improvement	Reliability Enhance-ment	Improved Accident/ Incident Behaviour	Inherent and/or Passive Feature	Preventive A.M. Measure	Mitigating A.M. Measure
System 80+™					
Reduced core outlet temperature		X			
Increased pressurizer volume		X			
Increased steam generator secondary water volume		X			
Four train safety injection system	X				
Automatic emergency feedwater system (4 trains)	X				
Safety depressurization system	X			X	
Reactor cavity flooding system					X

Classification of Safety Related Design Features					
Plant/ Design Improvement	Reliability Enhance-ment	Improved Accident/ Incident Behaviour	Inherent and/or Passive Feature	Preventive A.M. Measure	Mitigating A.M. Measure
NPI Concept					
Double containment (prestressed concrete containment with steel liner and reinforced concrete)		X			X
IRWST for LHSI and MHSI		X			
Enlarged PRZ and SG volume	X	X			
Safety Condenser (SACO)		X	X		
Primary circuit bleed (hot leg bleed)				X	X
Basemat protection for core melt					X

Classification of Safety Related Design Features					
Plant/ Design Improvement	Reliability Enhance-ment	Improved Accident/ Incident Behaviour	Inherent and/or Passive Feature	Preventive A.M. Measure	Mitigating A.M. Measure
ABWR 1300					
Axially zoned fuel gives higher thermal margin		X			
Internal main coolant pumps	X	X			
Increased redundancy in emergency core cooling system	X				
Diverse control rod drive mechanism (hydraulic and electric)	X				
BWR 90					
Increase stability margin		X			
Containment venting					X
Water inventory in the bottom section of drywell					X
Increased diversity in safety system functions, e.g. valves	X				

Classification of Safety Related Design Features

Plant/ Design Improvement	Reliability Enhance-ment	Improved Accident/ Incident Behaviour	Inherent and/or Passive Feature	Preventive A.M. Measure	Mitigating A.M. Measure
AP 600					
Lower power density		X			
Larger RPW and pressurizer volume		X			
Canned motor pumps, integrated in bottom part of steam generator	X	X			
Considerably reduced number of components	X				
Passive residual heat removal system			X		
Passive containment cooling system			X		X
Passive safety injection system		X	X	X	

Classification of Safety Related Design Features					
Plant/ Design Improvement	Reliability Enhance-ment	Improved Accident/ Incident Behaviour	Inherent and/or Passive Feature	Preventive A.M. Measure	Mitigating A.M. Measure
SBWR					
Reduced power density		X			
Larger pressure vessel volume above core		X			
Reduction of number of relief valves	X				
Gravity driven emergency core cooling system		X	X	X	
Isolation condensor system		X	X		
Passive containment cooling system			X		
Diverse control rod drive (hydraulic/electric)	X				

Classification of Safety Related Design Features					
Plant/ Design Improvement	Reliability Enhance-ment	Improved Accident/ Incident Behaviour	Inherent and/or Passive Feature	Preventive A.M. Measure	Mitigating A.M. Measure
PIUS					
Reduced power density		X			
Inherent shutdown by highly borated water from a surrounding pool via a "density lock"		X	X		
Passive pool cooling system (= passive long-term residual heat removal system)		X	X		
Deletion of unnecessary safety grade systems	X				

Classification of Safety Related Design Features					
Plant/ Design Improvement	Reliability Enhance-ment	Improved Accident/ Incident Behaviour	Inherent and/or Passive Feature	Preventive A.M. Measure	Mitigating A.M. Measure
SIR ™					
Reduced power density		X			
Increased shutdown reactivity		X			
Steam generators: secondary coolant with lower pressure inside tubes	X				
Passive pressure suppression system			X		
Passive emergency coolant injection system			X		
Passive secondary condensing system			X		
Passive safety depressurization system			X	X	

6 Conclusion

New light water reactor design concepts have been developed and are being developed in many countries for various reasons. One of the important reasons is the worldwide recognized need to further improve safety. Therefore, safety improvement is an important factor within the design of those advanced reactors.

This report aims at a collection of safety features of advanced light water reactor designs. It is supposed to be a "snapshot" reflecting the situation in the second half of 1991. This collection is meant to be an information basis for further studies, especially those which aim at safety evaluation. The grouping of concepts and the classification of features has been done to make such further steps easier. For the same reason, reference has been made to utility design requirements on which most of the designs are based.

Another development related to reactor safety has not been touched within this report, but which becomes important in the future in connection with a safety evaluation of the various concepts. It is the development in safety philosophy and in safety objectives and criteria, performed by safety and licensing authorities in various countries and by international organisations. The process presently underway is one of search for international harmonisation on the highest possible safety level. The development of future safety objectives and requirements is closely related to the design concept development. This requires detailed information exchange and cooperation among all participants involved in this process.

7 Literature

/3.-1/ Advanced Light Water Reactor Utility Requirements Document
- Executive Summary
- Volume I: ALWR Policy and Summary of Top-Tier Requirements
EPRI-Report March 1990, available through:
Research Report Center
Box 50 490
Palo Alto, CA 94 303, USA

/3.-2/ REP 2000 - A Development Programme to Outline Next French PWR Power Stations
L. Reynes, G. Serviere, P. Berkey,
Europen Nuclear Conference, Lyon, France, Sept. 23-26, 1990

/3.-3/ Sicherheitstechnische Ziele und Entwicklungstendenzen für die nächste Generation von LWR Kraftwerken
H. Märkl
VDI-Bericht Nr. 822, 1990

/3.-4/ Proceedings of an International Workshop on the Safety of Nuclear Installations of the Next Generation and beyond
Sponsored by IAEA and ANL
Chicago, Ill., USA, August 28-31, 1989

Presentations related to design requirements:
Safety Aspects of Advanced PWR Designs in France
P. Bacher
Safety Aspects of Advanced LWR Designs in the FRG
H. Märkl
Safety Aspects of Advanced PWR Designs in UK
F. R. Allen
Fundamental Trends and Technical Measures for Improving Safety of VVER NPPs Operating and Planned
V.M. Berkovich

Safety Aspects of U.S.-Sponsored ALWR Nuclear Power Plant Designs
J.J. Taylor

/3.-5/ IAEA Technical Committee Meeting on "Progress in Development and Design Aspects of Advanced Water-Cooled Reactors",
9.-12. September 1991, Rome, Italy

Presentations related to design requirements:
Requirements for next generation Light Water Reactors toward the 21st century in Japan
K. Matsui, K. Kuriyama
Progress on utility requirements for ALWRs
J. DeVine, T. Marston

/4.1.1.-1/ Status of Advanced Technology and Design for Water Cooled Reactors: LWR
IAEA-TECDOC 479, page 79-86

/4.1.1.-2/ Westinghouse Design Programs for Advanced PWRs:
Status and Outlook
H.J. Bruschi, E.H. Weiss, F.J. Mink
Company Document:
Westinghouse Energy Systems, Inc.
P.O. Box 355
Pittsburgh, Pennsylvania, 15230 USA

/4.1.2.-1/ APWR 1000
Westinghouse Summary Document, available through:
Mr. H.J. Bruschi
Director, Nuclear Plant Programs
Westinghouse Electric Corporation
P.O. Box 355
Pittsburgh, Pennsylvania 15230 USA

/4.1.3.-1/ System 80+™ Design Certification
by G.A. Davis
Combustion Engineering Company Document, available through:
Combustion Engineering, Inc.
1000 Prospect Hill Road
Windsor, Conneticut, 06095 USA

/4.1.3.-2/ same as 4.1.1-1, page 70-79

/4.1.5.-1/ German Design Features and Safety Goals for the
Next Generation of PWRs
P. Meyer
IAEA Technical Committee Meeting to Review Safety Features of
New Reactor Designs, Vienna, Nov. 11-15, 1991

/4.1.6.-1/ Investigation of Passive Systems for NPI-PWR
U. Krugmann, R. Schilling
IAEA Technical Committee Meeting on Progress in Development and Design of Advanced Water-Cooled Reactors
Rome, September 9-12, 1991

/4.1.6.-2/ Deutsch-französische Zusammenarbeit bei der Entwicklung der nächsten Generation von Druckwasserreaktoren
F. Ruess
VDI-Bericht Nr. 884, 1991

/4.1.7.-1/ Development of Projects of Advanced Water-Cooled Reactor Plants
B.V. Budylin, G.I. Biryukov, V.G. Fedorov, V.A. Voznesensky
IAEA Technical Committee Meeting on Progress in Development and Design Aspects of Advanced Water-Cooled Reactors,
Rome, Italy, Sept. 9-12, 1991

/4.2.1.-1/ ABWR - First of the New Generation of Reactors for the 90's
S.A. Hucik, A.S. Rao
IAEA Technical Committee Meeting on Progress in Development and Design Aspects of Advanced Water-Cooled Reactors,
Rome, Italy, Sept. 9-12, 1991

/4.2.2.-1/ Advanced Light Water Reactors: A Finish-Swedish Proposal
A. Rastas, C. Sundqvist
European Nuclear Conference 1990, Lyon, France

/4.2.2.-2/ Safety Aspects of the BWR 90 Nuclear Power Plant
L.I. Tirén, T. Ohlin
ANS 1991 Annual Meeting

/4.2.2.-3/ BWR 90
Company Document (brief outline), available through:
ABB-Atom
S-721 63 Västeras
Sweden

/4.3.1.-1/ New Nuclear Economics: Affordable Electric Power
H. Bruschi, R. Henderson
Westinghouse Documentation IAEI-SR-156/26, Aug. 1990,
available through:
Nuclear Advanced Technology Division
Westinghouse Electric Corp.
P.O. Box 355
Pittsburgh, PA 15230 USA

/4.3.1.-2/ AP 600 offers a simpler way to greater safety, operability and maintainability
R. Vijuk, H. Bruschi
Nuclear Engineering International, Nov. 1988

/4.3.1.-3/ AP 600 Plant Design
Meeting the Industry Needs
H. Bruschi, R. Vijuk
1990 International Joint Power Generation Conference
Oct. 21-25, Boston MA, USA

/4.3.1.-4/ Design of the AP 600
Passive Containment Cooling System Structures
M. Olivieri, S. Orlandi, R. Orr
IAEA Technical Committee Meeting on Progress in Development and Design Aspects of Advanced Water-Cooled Reactors,
Rome, Italy, Sept. 9-12, 1991

/4.3.2.-1/ Improved Containment Concept for Future PWRs
H. Hennies, G. Kessler, J. Eibl
5th International Conference on Emerging Nuclear Energy Systems, Karlsruhe, July 3-6, 1989

/4.3.2.-2/ Improved Containment and Core Catcher for Future LWRs and FBRs
H. Hennies, G. Keßler
6th International Conference on Emerging Nuclear Energy Systems, Monterey, USA, June 16-21, 1991

/4.3.3.-1/ SBWR - Simplifications in Plant Design for the 90's
R.J. McCandless, A.S. Rao, C.D. Sawyer
IAEA Technical Committee Meeting on Progress in Development and Design Aspects of Advanced Water-Cooled Reactors, Rome, Italy, Sept. 9-12, 1991

/4.3.3.-2/ SBWR Technology and Development
A.S. Rao, C.D. Sawyer, R.J. Mc Candless
IAEA Technical Committee Meeting on Progress in Development and Design Aspects of Advanced Water-Cooled Reactors, Rome, Italy, Sept. 9-12, 1991

/4.3.3.-3/ SBWR: The key to improved safety performance and economics
R.J. Mc Candless, J.R. Redding
Nuclear Engineering International, November 1989

/4.3.3.-4/ SBWR-IC and PCC-Systems: An Approach to Passive Safety
M. Brandini, F.L. Rizzo, E. Gesi, A.J. James
IAEA Technical Committee Meeting on Progress in Development and Design Aspects of Advanced Water-Cooled Reactors, Rome, Italy, Sept. 9-12, 1991

/4.3.4.-1/ Status of Advanced Technology and Design for Water-Cooled Reactors: LWRs
IAEA TECDOC 479

/4.3.4.-2/ Conceptual Design and Development of Simplified LWRs in Japan
Yoshiaki Oka et al.
IAEA Technical Committee Meeting on Progress in Development and Design Aspects of Advanced Water-Cooled Reactors,
Rome, Italy, Sept. 9-12, 1991

/4.4.1.-1/ PIUS - Status and Perspectives
T. Peddersen
Seminar on Small and Medium-Sized Nuclear Reactors
Post-SMIRT 10 Conf., August 21-23, 1979, San Diego, USA.
Will also appear in Nuclear Engineering and Design.

/4.4.1.-2/ Nuclear Power Facing Human Fallibility - The PIUS Design
K. Hammerz, L. Nilsson, T. Pedersen
ENC '90 Proceedings Vol. II, pp. 701/718

/4.4.1-3/ The PIUS Pressurized Water Reactor: Aspects of Plant Operation and Availability
K. Hammerz, L. Nilsson, T. Pedersen, Ch. Pind
Nuclear Technology, Vol. 91, July 1990

/4.4.1-4/ PIUS - A new generation of nuclear power plants
Company documentation, available through:
ABB Atom
S - 72163 Västeras
Sweden

/4.4.2.-1/ Safe Integral Reactor (SIR™)
Program Summary
Company documentation, information available through:
SIR Liaison Office Europe
att. Mr. J.M. Rogers
Winfrith Technology Centre, Dorchester, Dorset DT2 8DH,
United Kingdom

/4.4.2.-2/ Several papers in:
Nuclear Energy, 1991/30
No. 2, April 1991

/4.4.4.-1/ Status of Advanced Technology and Design for Water-Cooled Reactors: LWR
IAEA TECDOC 479, page 152

/4.4.4.-2/ same as /4.4.4.-1/, page 119

/4.4.4.-3/ Innovative Systems and Components aimed at Providing PWRs with Completely Passive Emergency Shutdown and Decay Heat Removal
M. Caira, M. Cumo, L. Gramiccia, A. Naviglio
IAEA Technical Committee Meeting on Progress in Development and Design Aspects of Advanced Water-Cooled Reactors,
Rome, Italy, 9-12 September 1991

European Communities — Commission

EUR 14296 — Identification of improvements of advanced light water reactor concepts

W. Frisch, K. Liesch, B. Riegel

Luxembourg: Office for Official Publications of the European Communities

1993 — IV, 88 pp., num. tab., fig. — 21.0 × 29.7 cm

Nuclear science and technology series

ISBN 92-826-5116-9

Price (excluding VAT) in Luxembourg: ECU 10.50

The scope of this report is to identify the improvement of reactor developments with respect to reactor safety. This includes the collection of non-proprietary information on the description of the advanced design characteristics, especially summary design descriptions and general publications.

This documentation is not intended to include a safety evaluation of the advanced concepts; however, it is structured in such a way that it can serve as a basis for a future safety evaluation. This is taken into account in the structure of the information regarding the distinction of the various concepts with respect to their 'advancement' and the classification of design characteristics according to some basic safety aspects. The overall description concentrates on those features which are relevant to safety. Other aspects, such as economy, operational features, maintenance, the construction period, etc. are not considered explicitly in this report.

Venta y suscripciones • Salg og abonnement • Verkauf und Abonnement • Πωλήσεις και συνδρομές
Sales and subscriptions • Vente et abonnements • Vendita e abbonamenti
Verkoop en abonnementen • Venda e assinaturas

BELGIQUE / BELGIË

Moniteur belge / Belgisch Staatsblad
Rue de Louvain 42 / Leuvenseweg 42
B-1000 Bruxelles / B-1000 Brussel
Tél. (02) 512 00 26
Fax (02) 511 01 84

Autres distributeurs / Overige verkooppunten

Librairie européenne/ Europese boekhandel
Rue de la Loi 244/Wetstraat 244
B-1040 Bruxelles / B-1040 Brussel
Tél. (02) 231 04 35
Fax (02) 735 08 60

Jean De Lannoy
Avenue du Roi 202 /Koningslaan 202
B-1060 Bruxelles / B 1060 Brussel
Tél. (02) 538 51 69
Télex 63220 UNBOOK B
Fax (02) 538 08 41

Document delivery:
Credoc
Rue de la Montagne 34 / Bergstraat 34
Bte 11 / Bus 11
B-1000 Bruxelles / B-1000 Brussel
Tél. (02) 511 69 41
Fax (02) 513 31 95

DANMARK

J. H. Schultz Information A/S
Herstedvang 10-12
DK-2620 Albertslund
Tlf. (45) 43 63 23 00
Fax (Sales) (45) 43 63 19 69
Fax (Management) (45) 43 63 19 49

DEUTSCHLAND

Bundesanzeiger Verlag
Breite Straße
Postfach 10 80 06
D-W-5000 Köln 1
Tel. (02 21) 20 29-0
Telex ANZEIGER BONN 8 882 595
Fax 2 02 92 78

GREECE/ΕΛΛΑΔΑ

G.C. Eleftheroudakis SA
International Bookstore
Nikis Street 4
GR-10563 Athens
Tel. (01) 322 63 23
Telex 219410 ELEF
Fax 323 98 21

ESPAÑA

Boletín Oficial del Estado
Trafalgar, 29
E-28071 Madrid
Tel. (91) 538 22 95
Fax (91) 538 23 49

Mundi-Prensa Libros, SA
Castelló, 37
E-28001 Madrid
Tel. (91) 431 33 99 (Libros)
431 32 22 (Suscripciones)
435 36 37 (Dirección)
Télex 49370-MPLI-E
Fax (91) 575 39 98

Sucursal:
Librería Internacional AEDOS
Consejo de Ciento, 391
E-08009 Barcelona
Tel. (93) 488 34 92
Fax (93) 487 76 59

Llibreria de la Generalitat de Catalunya
Rambla dels Estudis, 118 (Palau Moja)
E-08002 Barcelona
Tel. (93) 302 68 35
302 64 62
Fax (93) 302 12 99

FRANCE

Journal officiel
Service des publications des Communautés européennes
26, rue Desaix
F-75727 Paris Cedex 15
Tél. (1) 40 58 75 00
Fax (1) 40 58 77 00

IRELAND

Government Supplies Agency
4-5 Harcourt Road
Dublin 2
Tel. (1) 61 31 11
Fax (1) 78 06 45

ITALIA

Licosa SpA
Via Duca di Calabria, 1/1
Casella postale 552
I-50125 Firenze
Tel. (055) 64 54 15
Fax 64 12 57
Telex 570466 LICOSA I

GRAND-DUCHÉ DE LUXEMBOURG

Messageries Paul Kraus
11, rue Christophe Plantin
L-2339 Luxembourg
Tél. 499 88 88
Télex 2515
Fax 499 88 84 44

NEDERLAND

SDU Overheidsinformatie
Externe Fondsen
Postbus 20014
2500 EA 's-Gravenhage
Tel. (070) 37 89 911
Fax (070) 34 75 778

PORTUGAL

Imprensa Nacional
Casa da Moeda, EP
Rua D. Francisco Manuel de Melo, 5
P-1092 Lisboa Codex
Tel. (01) 69 34 14

Distribuidora de Livros Bertrand, Ld.ª
Grupo Bertrand, SA
Rua das Terras dos Vales, 4-A
Apartado 37
P-2700 Amadora Codex
Tel. (01) 49 59 050
Telex 15798 BERDIS
Fax 49 60 255

UNITED KINGDOM

HMSO Books (Agency section)
HMSO Publications Centre
51 Nine Elms Lane
London SW8 5DR
Tel. (071) 873 9090
Fax 873 8463
Telex 29 71 138

ÖSTERREICH

Manz'sche Verlags- und Universitätsbuchhandlung
Kohlmarkt 16
A-1014 Wien
Tel. (0222) 531 61-0
Telex 112 500 BOX A
Fax (0222) 531 61-39

SUOMI

Akateeminen Kirjakauppa
Keskuskatu 1
PO Box 128
SF-00101 Helsinki
Tel. (0) 121 41
Fax (0) 121 44 41

NORGE

Narvesen information center
Bertrand Narvesens vei 2
PO Box 6125 Etterstad
N-0602 Oslo 6
Tel. (2) 57 33 00
Telex 79668 NIC N
Fax (2) 68 19 01

SVERIGE

BTJ
Tryck Traktorwägen 13
S-222 60 Lund
Tel. (046) 18 00 00
Fax (046) 18 01 25

SCHWEIZ / SUISSE / SVIZZERA

OSEC
Stampfenbachstraße 85
CH-8035 Zürich
Tel. (01) 365 54 49
Fax (01) 365 54 11

CESKOSLOVENSKO

NIS
Havelkova 22
13000 Praha 3
Tel. (02) 235 84 46
Fax 42-2-264775

MAGYARORSZÁG

Euro-Info-Service
Pf. 1271
H-1464 Budapest
Tel./Fax (1) 111 60 61/111 62 16

POLSKA

Business Foundation
ul. Krucza 38/42
00-512 Warszawa
Tel. (22) 21 99 93, 628-28-82
International Fax&Phone
(0-39) 12-00-77

ROUMANIE

Euromedia
65, Strada Dionisie Lupu
70184 Bucuresti
Tel./Fax 0 12 96 46

BULGARIE

D.J.B.
59, bd Vitocha
1000 Sofia
Tel./Fax 2 810158

RUSSIA

CCEC (Centre for Cooperation with the European Communities)
9, Prospekt 60-let Oktyabria
117312 Moscow
Tel. 095 135 52 87
Fax 095 420 21 44

CYPRUS

Cyprus Chamber of Commerce and Industry
Chamber Building
38 Grivas Dhigenis Ave
3 Deligiorgis Street
PO Box 1455
Nicosia
Tel. (2) 449500/462312
Fax (2) 458630

TÜRKIYE

Pres Gazete Kitap Dergi Pazarlama Dağitim Ticaret ve sanayi AŞ
Narlibahçe Sokak N. 15
Istanbul-Cağaloğlu
Tel. (1) 520 92 96 - 528 55 66
Fax 520 64 57
Telex 23822 DSVO-TR

ISRAEL

ROY International
PO Box 13056
41 Mishmar Hayarden Street
Tel Aviv 61130
Tel. 3 496 108
Fax 3 544 60 39

CANADA

Renouf Publishing Co. Ltd
Mail orders — Head Office:
1294 Algoma Road
Ottawa, Ontario K1B 3W8
Tel. (613) 741 43 33
Fax (613) 741 54 39
Telex 0534783

Ottawa Store:
61 Sparks Street
Tel. (613) 238 89 85

Toronto Store:
211 Yonge Street
Tel. (416) 363 31 71

UNITED STATES OF AMERICA

UNIPUB
4611-F Assembly Drive
Lanham, MD 20706-4391
Tel. Toll Free (800) 274 4888
Fax (301) 459 0056

AUSTRALIA

Hunter Publications
58A Gipps Street
Collingwood
Victoria 3066
Tel. (3) 417 5361
Fax (3) 419 7154

JAPAN

Kinokuniya Company Ltd
17-7 Shinjuku 3-Chome
Shinjuku-ku
Tokyo 160-91
Tel. (03) 3439-0121

Journal Department
PO Box 55 Chitose
Tokyo 156
Tel. (03) 3439-0124

SINGAPORE

Legal Library Services Ltd
STK Agency
Robinson Road
PO Box 1817
Singapore 9036

AUTRES PAYS
OTHER COUNTRIES
ANDERE LÄNDER

Office des publications officielles des Communautés européennes
2, rue Mercier
L-2985 Luxembourg
Tél. 499 28 1
Télex PUBOF LU 1324 b
Fax 48 85 73/48 68 17

10/92

CD-NA-14296-EN-C

NOTICE TO THE READER

All scientific and technical reports published by the Commission of the European Communities are announced in the monthly periodical **'euro abstracts'**. For subscription (1 year: ECU 118) please write to the address below.

Price (excluding VAT) in Luxembourg: ECU 10.50

ISBN 92-826-5116-9

OFFICE FOR OFFICIAL PUBLICATIONS
OF THE EUROPEAN COMMUNITIES

L-2985 Luxembourg

9 789282 651162 >