DRAWING ABBREVIATIONS

A --------------------
A LABEL CLASS A DOOR
A/C AIR CONDITION
A/C UNIT AIR CONDITIONING UNIT
A/E ARCHITECT/ENGINEER
AB ANCHOR BOLT
ACC ACCESSIBLE
ACS AUTOMATIC CONTROL SYSTEM
ACS DR ACCESS DOOR
ACS PNL ACCESS PANEL
ACT ACOUSTICAL CEILING TILE
ADA AMERICANS WITH DISABILITIES ACT
ADMIN ADMINISTRATION
AFC ABOVE FINISHED COUNTER
AFF ABOVE FINISHED FLOOR
AFG ABOVE FINISHED GRADE
AFS ABOVE FINISHED SLAB
AGGR AGGREGATE
AHU AIR HANDLING UNIT
AIB AIR INFILTRATION BARRIER
ALT ALTERNATE
ALUM ALUMINUM
ANOD ANODIZE
APC ACOUSTICAL PANEL CEILING
APPROX APPROXIMATE
AR AS REQUIRED
ARCH ARCHITECT
ASC ABOVE SUSPENDED CEILING
ASSY ASSEMBLY
ATC ACOUSTICAL TILE CEILING
AVG AVERAGE
AW ARCHITECTURAL WOODWORK
AWT ACOUSTICAL WALL TREATMENT

B --------------------
B LABEL CLASS B DOOR
BALC BALCONY
BB BASEBOARD
BC BOOKCASE
BD BOARD
BDRY BOUNDARY
BFF BELOW FINISH FLOOR
BHMA BUILDER'S HARDWARE MANUFACTURER'S ASSOCIATION
BLDG BUILDING
BLKG BLOCKING
BLT IN BUILT-IN
BN BULLNOSE
BOS BOTTOM OF STEEL
BOT BOTTOM
BP BUILDING PAPER
BRKT BRACKET
BSMT BASEMENT
BTWN BETWEEN
BUR BUILT-UP ROOFING

C --------------------
C CONC CAST CONCRETE
C LABEL CLASS C DOOR
CAB CABINET
CATW CATWALK
CAV CAVITY
CBB CEMENTITIOUS (BACKER) BOARD
CD CONSTRUCTION DOCUMENTS
CDW CHILLED DRINKING WATER
CEM PLAS CEMENT PLASTER
CER CERAMIC
CF CONTRACTOR FURNISHED
CF/CI CONTRACTOR FURNISHED/ CONTRACTOR INSTALLED
CFE CONTRACTOR FURNISHED EQUIPMENT
CFLG COUNTERFLASHING
CFM CUBIC FEET PER MINUTE
CFMF COLD-FORMED METAL FRAMING
CFS CUBIC FEET PER SECOND
CG CORNER GUARD
CI CAST IRON
CIP CAST-IN-PLACE
CJ CONTROL JOINT
CL CENTER LINE
CLG CEILING
CLG DIFF CEILING DIFFUSER
CLG HT CEILING HEIGHT
CLL COLUMN LINE
CLO CLOSET
CLR COLOR
CLRM CLASSROOM
CMU CONCRETE MASONRY UNIT
CNDS CONDENSATE
CDR CARD READER
CO CLEANOUT
COL COLUMN
COMM COMMUNICATION
CONC CONCRETE
CONC FLR CONCRETE FLOOR
CONF CONFERENCE
CONT CONTINUE
COORD COORDINATE
CORR CORRIDOR
CP CONCRETE PIPE
CPT CARPET
CR CONTROL ROOM
CS CAST STONE
CSWK CASEWORK
CT CERAMIC TILE
CTB CERAMIC TILE BASE
CTF CERAMIC TILE FLOOR
CTR CENTER
CU FT CUBIC FEET
CW CASEMENT WINDOW

D --------------------
D DEPTH
D LABEL CLASS D DOOR
DBL DOUBLE
DEMO DEMOLITION
DEPT DEPARTMENT
DET DETAIL
DIA DIAMETER
DIR DIRECTION
DIST DISTANCE
DOC DOCUMENT
DR DOOR
DS DOWNSPOUT

E --------------------
E LABEL CLASS E DOOR
EA EACH
EF EACH FACE
EIFS EXTERIOR INSULATION AND FINISH SYSTEM
EJ EXPANSION JOINT
ES EACH SIDE
EL ELEVATION
ELEV ELEVATOR
ENTR ENTRANCE
EPS EXPANDED POLYSTYRENE BOARD (INSULATION)
EQ EQUAL
EWC ELECTRIC WATER COOLER
EXP EXPOSED
EXT EXTERIOR
EXT EXTINGUISHER
EXT GR EXTERIOR GRADE

F --------------------
FA FIRE ALARM
FAAP FIRE ALARM ANNUNCIATOR PANEL
FAS BD FASCIA BOARD
FC BRK FACE BRICK
FCO FLOOR CLEANOUT
FD FLOOR DRAIN
FDTN FOUNDATION
FE FIRE EXTINGUISHER
FEC FIRE EXTINGUISHER CABINET
FED FEDERAL
FF FINISH FACE
FF EL FINISH FLOOR ELEVATION
FF INSUL FOIL BACKED INSULATION
FGL FIBERGLASS
FH FIRE HOSE
FHP FULL HEIGHT PARTITION
FIN FINISH
FIN BS FINISH BOTH SIDES
FIN FLR FINISH FLOOR
FIN GR FINISH GRADE
FIXT FIXTURE
FLDG FOLDING
FLEX FLEXIBLE
FLG FLOORING
FLMT FLUSH MOUNT
FLR FLOOR
FM FACTORY MUTUAL
FOC FACE OF CONCRETE
FOM FACE OF MASONRY
FR FIRE RESISTANT
FRG FIBER REINFORCED GYPSUM
FRMG FRAMING
FRP FIBERGLASS REINFORCED PLASTIC
FRTW FIRE RETARDANT TREATED WOOD
FS FEDERAL SPECIFICATION
FSTNR FASTENER
FT FEET
FTG FOOTING
FWC FABRIC WALL COVERING

G --------------------
G NATURAL GAS
GALV GALVANIZED
GB GRAB BAR
GFCI GOVERNMENT FURNISHED CONTRACTOR INSTALLED
GFGI GOVERNMENT FURNISHED INSTALLED BY GOVERNMENT
GFRG GLASS-FIBER-REINFORCED GYPSUM
GLZ GLAZING
GR FL GROUND FLOOR
GUT GUTTER
GYP BD GYPSUM BOARD
GYP PLAS GYPSUM PLASTER

H --------------------
HB HOSE BIBB
HDPE HIGH DENSITY POLYETHYLENE
HDW HARDWARE
HDWD HARDWOOD
HEPA HIGH EFFICIENCY PARTICULATE AIR (FILTER)
HM HOLLOW METAL
HMD HOLLOW METAL DOOR
HORIZ HORIZONTAL
HT HEIGHT
HYDR HYDRAULIC

I --------------------
IBC INTERNATIONAL BUILDING CODE
INSUL INSULATION
INT INTERIOR
ILO IN LIEU OF

J --------------------
JAN JANITOR

K --------------------
KPD KEYPAD
KIT KITCHEN
KPL KICKPLATE

L --------------------
LAM LAMINATE
LAV LAVATORY
LBR LUMBER
LBS POUND
LDG LANDING
LF LINEAR FEET (FOOT)
LIB LIBRARY
LIN LINEAR
LKR LOCKER
LOC LOCATION
LT LIGHT
LVDR LOUVER DOOR
LVR LOUVER

M --------------------
MACH RM MACHINE ROOM
MATL MATERIAL
MAX MAXIMUM
MC MOISTURE CONTENT
MD METAL DECK
MECH MECHANICAL
MECH RM MECHANICAL ROOM
MEMB MEMBRANE
MF MILL FINISH
MFR MANUFACTURER
MID MIDDLE
MIL STD MILITARY STANDARD
MIN MINIMUM, MINUTE
MIRR MIRROR
MISC MISCELLANEOUS
MLDG MOLDING (MOULDING)
MO MASONRY OPENING
MOD MODIFY
MB MOISTURE BARRIER
MTG MOUNTING
MTL METAL
MVBL MOVABLE
MWP MEMBRANE WATERPROOFING

N --------------------
N NORTH
NA NOT APPLICABLE
NFPA NATIONAL FIRE PROTECTION ASSOCIATION
NIC NOT IN CONTRACT
NO NUMBER
NOM NOMINAL
NP NO PAINT
NRC NOISE REDUCTION COEFFICIENT
NTS NOT TO SCALE

O ------------------
OA OVERALL
OC ON CENTER
OD OUTSIDE DIAMETER
OFD OVERFLOW DRAIN
OFF OFFICE
OGL OBSCURE GLASS
OPH OPPOSITE HAND
OPNG OPENING
OPP OPPOSITE
OPQ OPAQUE
OWSJ OPEN WEB STEEL JOIST
OPR OPERABLE
ORD OVERFLOW ROOF DRAIN
ORIG ORIGINAL

P --------------------
PA PUBLIC ADDRESS
PAR PARAPET
PAT PATTERN
PB PULL BOX
PBD PARTICLE BOARD
PCC PRECAST CONCRETE
PCF POUNDS PER CUBIC FOOT
PCT PERCENT
PERF PERFORATED
PERIM PERIMETER
PH PHASE
PIL PILASTER
PL PROPERTY LINE
PL GL PLATE GLASS
PLAM PLASTIC LAMINATE
PLAS PLASTER
PLBG PLUMBING
PLG PILING
PLYWD PLYWOOD
PNL PANEL
PP PL PUSH/PULL PLATE
PR PAIR
PRCST PRECAST
PRKG PARKING
PS CONC PRESTRESSED CONCRETE
PSF POUNDS PER SQUARE FOOT
PSI POUNDS PER SQUARE INCH
PT PRESSURE TREATED
PTD PAPER TOWEL DISPENSER
PTDR PAPER TOWEL DISPENSER AND RECEPTACLE
PTN PARTITION
PWR POWER

Q --------------------
QT QUARRY TILE
QTY QUANTITY

R --------------------
RB RESILIENT BASE
RBM REINFORCED BRICK MASONRY
RBR RUBBER
RC REINFORCED CONCRETE
RCP REFLECTED CEILING PLAN
RD ROOF DRAIN
RDG INS RIGID INSULATION, SOLID
REC RECESSED
REC ROOM RECREATION ROOM
REF REFERENCE
REM REMOVABLE
REP REPAIR
REPL REPLACE
REQ REQUIRE
REQD REQUIRED
RESIL RESILIENT
REST RESTROOM
RF RESILIENT FLOORING
RFG ROOFING
RH ROOF HATCH
RHR RIGHT HAND REVERSE
RL ROOF LEADER
RLG RAILING
RM ROOM
RO ROUGH OPENING
RSD ROLLING STEEL DOOR
RV ROOF VENT
RVL REVEAL

S --------------------
SB SPLASH BLOCK
SCHED SCHEDULE
SD SMOKE DETECTOR
SF SQUARE FOOT (FEET)
SFTWD SOFTWOOD
SGL SINGLE
SHT MTL FLASH SHEET METAL (FLASHING)
SHTHG SHEATHING
SHV SHELVING
SIM SIMILAR
SJ SCORED JOINT
SKLT SKYLIGHT
SLNT SEALANT
SMK SMOKE
SMLS SEAMLESS
SP EL SPOT ELEVATION
SPEC SPECIFICATION
SQ SQUARE
SQ IN SQUARE INCH
SQ YD SQUARE YARD
SST STAINLESS STEEL
ST STAIRS
STD STANDARD
STL JST STEEL JOIST
STL RF DK STEEL ROOF DECK
STOR STORAGE
STR STRINGERS
STRB/HRN STROBE/HORN
SUB FL SUBFLOOR
SV SHEET VINYL
SW SIDEWALK

T --------------------
T TREAD
T/S TUB/SHOWER
TC TERRA COTTA
TD TRENCH DRAIN
TEL TELEPHONE
TEMP TEMPORARY
TER TERRAZZO
TFF TOP OF FINISH FLOOR
THK THICKNESS
TK BD TACKBOARD
TMPD GL TEMPERED GLASS
TN TRUE NORTH
TOF TOP OF FOOTING
TOM TOP OF MASONRY
TOP TOP OF PARAPET
TOPO TOPOGRAPHY
TOS TOP OF SLAB
TRANS TRANSOM
TRTD TREATED
TV TELEVISION

U --------------------
UON UNLESS OTHERWISE NOTED
UPS UNINTERRUPTIBLE POWER SUPPLY
UR URNINAL

V --------------------
VAC VACUUM
VB VINYL BASE
VCT VINYL COMPOSITION TILE
VERT VERTICAL
VIF VERIFY IN FIELD
VNR VENEER
VOL VOLUME
VR VAPOR RETARDER
VRFY VERIFY
VWF VINYL WALL FABRIC

W --------------------
W CAB WALL CABINETS
W/O WITHOUT
WBL WOOD BLOCKING
WC WATER CLOSET
WD WOOD
WDW WINDOW
WF WIDE FLANGE
WF BM BEAM, WIDE FLANGE
WGL WIRED GLASS
WH WALL HUNG
WPM WATERPROOF MEMBRANE
WSCT WAINSCOT
WT WEIGHT
WTR WATER
WWF WELDED WIRE FABRIC

X --------------------
X BRACE CROSS BRACE
XFMR TRANSFORMER

Y --------------------
YD YARD

INDEX OF DRAWINGS

NUMBERING SYSTEM:

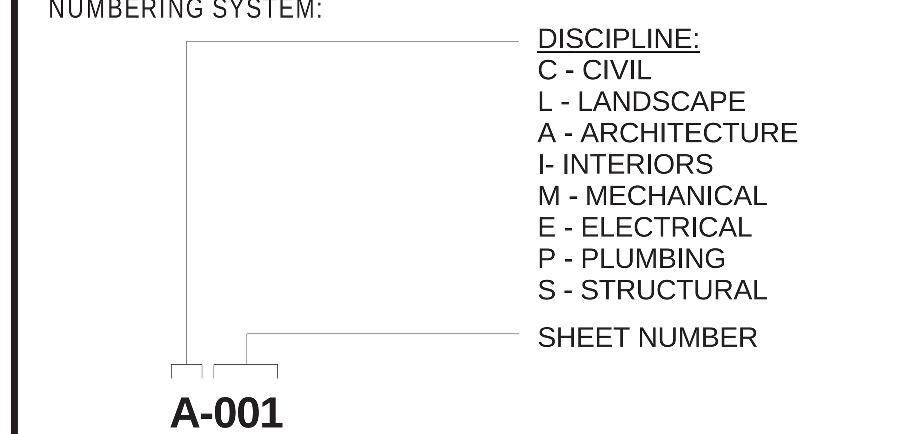

LEGEND

MATERIALS

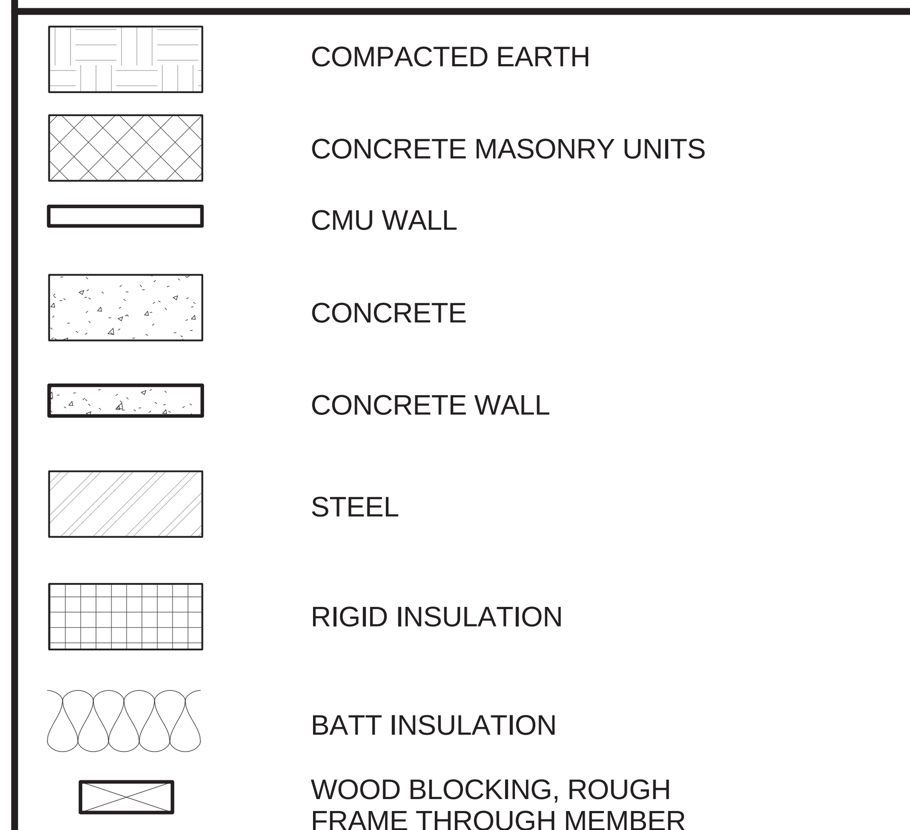

STANDARD DOOR LOCATIONS

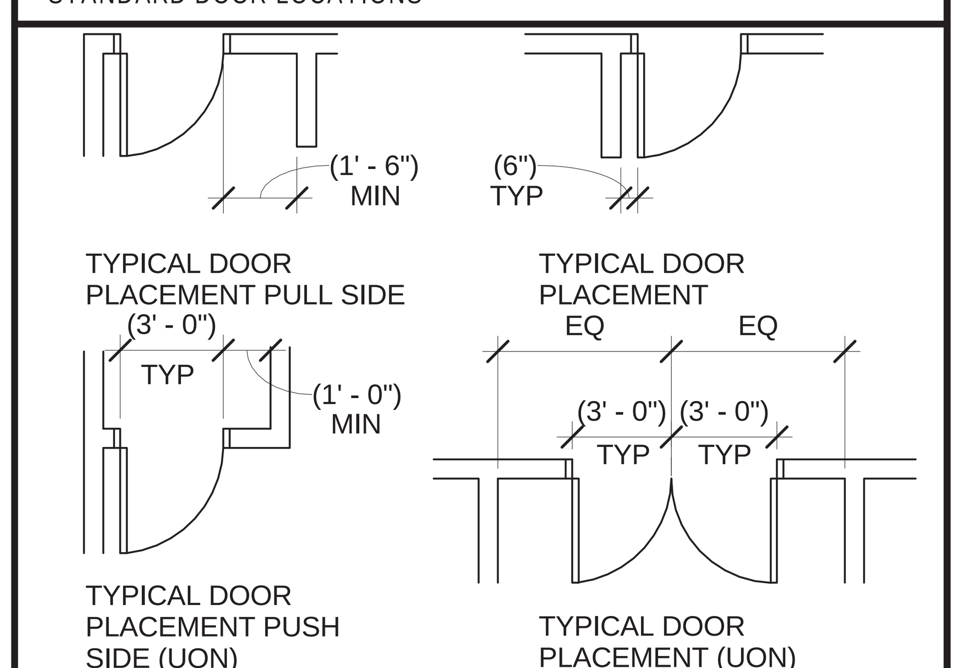

MOUNTING HEIGHTS

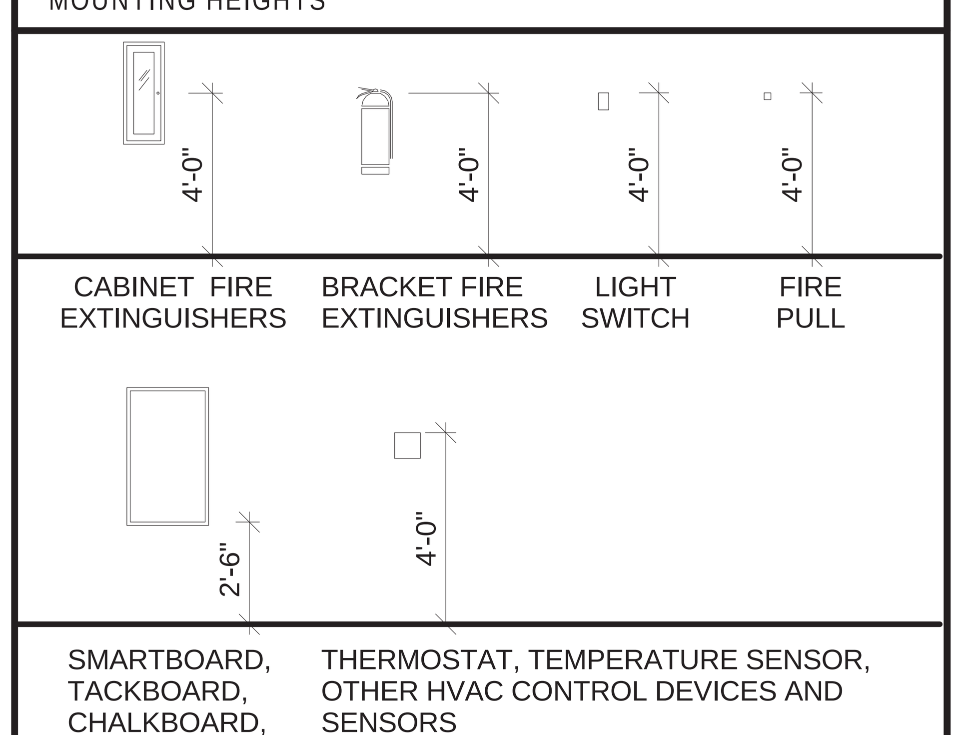

GENERAL NOTES

A. VERIFY AND DOCUMENT CONDITIONS AND DIMENSIONS PRIOR TO STARTING CONSTRUCTION.
B. DO NOT SCALE THE DRAWINGS FOR CONSTRUCTION PURPOSES.
C. VERIFY SIZE, LOCATIONS AND CHARACTERISTICS OF ALL EQUIPMENT TO BE FURNISHED WITH THE MANUFACTURERS OR SUPPLIERS BEFORE BEGINNING CONSTRUCTION.
D. VERIFY SIZE AND LOCATION OF ALL OPENINGS FOR EQUIPMENT AND RELATED WORK.
E. ALL PLAN DIMENSIONS ARE TO FACE OF GYPSUM BOARD, FACE OF CONCRETE MASONRY UNITS, FACE OF CONCRETE, OR CENTERLINE OF COLUMNS.
F. REFER TO MECHANICAL, PLUMBING, ELECTRICAL, AND FIRE PROTECTION DRAWINGS FOR ADDITIONAL LOCATIONS OF PENETRATIONS OCCURRING WITHIN FLOOR, WALL, CEILING AND ROOF SYSTEMS.
G. REFER TO MECHANICAL, PLUMBING, AND ELECTRICAL DRAWINGS FOR LOCATIONS OF EQUIPMENT NOT SHOWN ON ARCHITECTURAL DRAWINGS.
H. FINISH FLOOR ELEVATION OF (100'-0") IS A RELATIVE ELEVATION USED FOR DESIGN COORDINATION. REFER TO CIVIL DRAWINGS FOR ACTUAL TOPOGRAPHICAL ELEVATION.

ARCHITECTURAL SYMBOLS

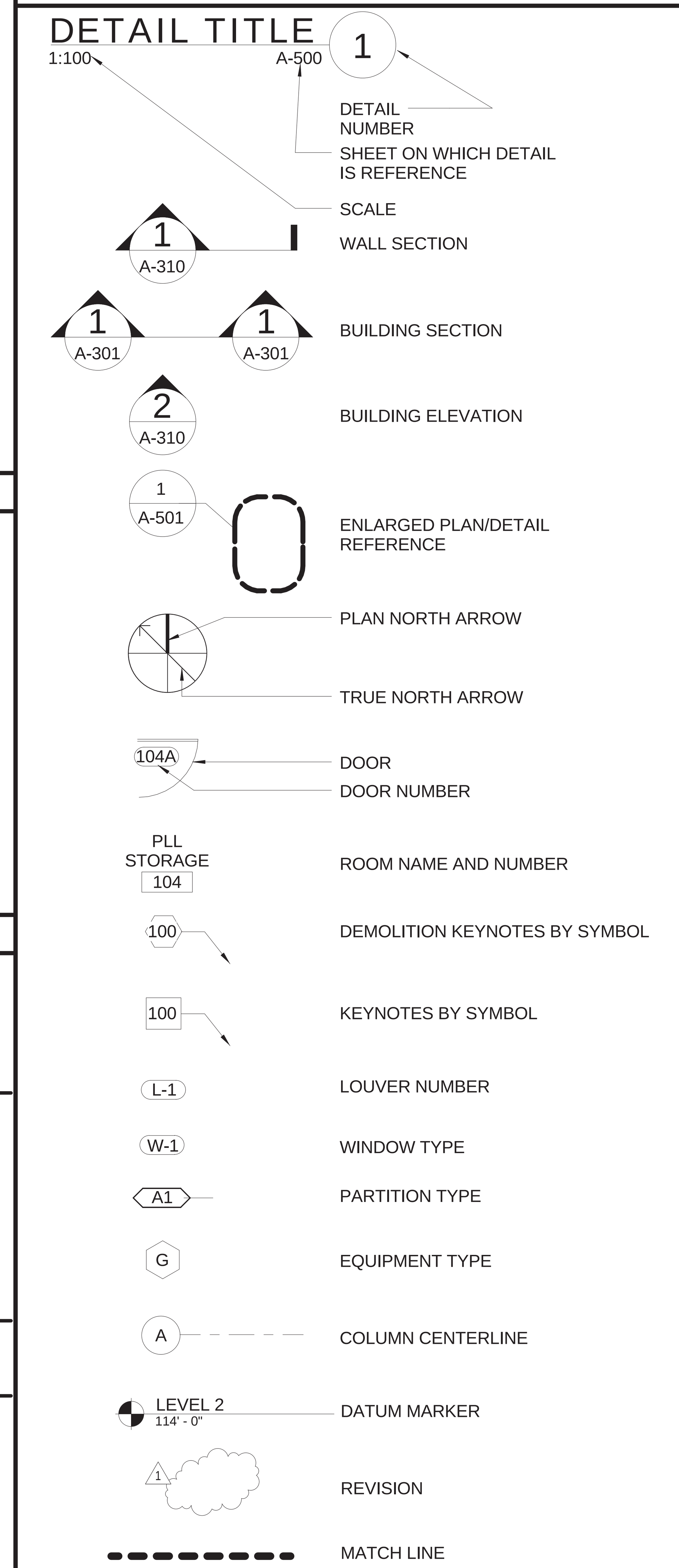

SYM	DESCRIPTION	DATE	APPR

NAVFAC

REGISTERED ARCHITECT
MATTHEW THOMAS
05.15.2015
22853
STATE OF TEXAS
SEAL

JACOBS/ Burns & McDonnell SINCE 1898

JACOBS/BURNS & MCDONNELL, A JOINT VENTURE
155 NORTH LAKE AVENUE
PASADENA, CA 91101 USA
TEL 1 (817) 735-6000
FAX 1 (817) 735-6148

JEG NO. FDWD7911 A/E INFO

APPROVED
FOR COMMANDER NAVFAC 6/11/2015

ACTIVITY

SATISFACTORY TO DATE

DES	CPC	DRW	MTH	CHK	WRP
PM/DM					KAO
BRANCH MANAGER					
CHIEF ENG/ARCH					
FIRE PROTECTION					

DEPARTMENT OF THE NAVY
NAVAL FACILITIES ENGINEERING COMMAND
NAVAL FACILITIES ENGINEERING COMMAND ~ PACIFIC
NAVFAC PACIFIC
JOINT BASE PEARL HARBOR - HICKAM
MARINE CORPS BASE HAWAII
KANEOHE, HAWAII

FY14 MCON PROJECT P-863
AIRCRAFT MAINTENANCE HANGAR UPGRADES

ABBREVIATIONS, SYMBOLS AND GENERAL NOTES

SCALE	AS SHOWN
EPROJECT NO.	862914
CONSTR. CONTR. NO.	
NAVFAC DRAWING NO.	19043333
SHEET	68 OF 313

A-001

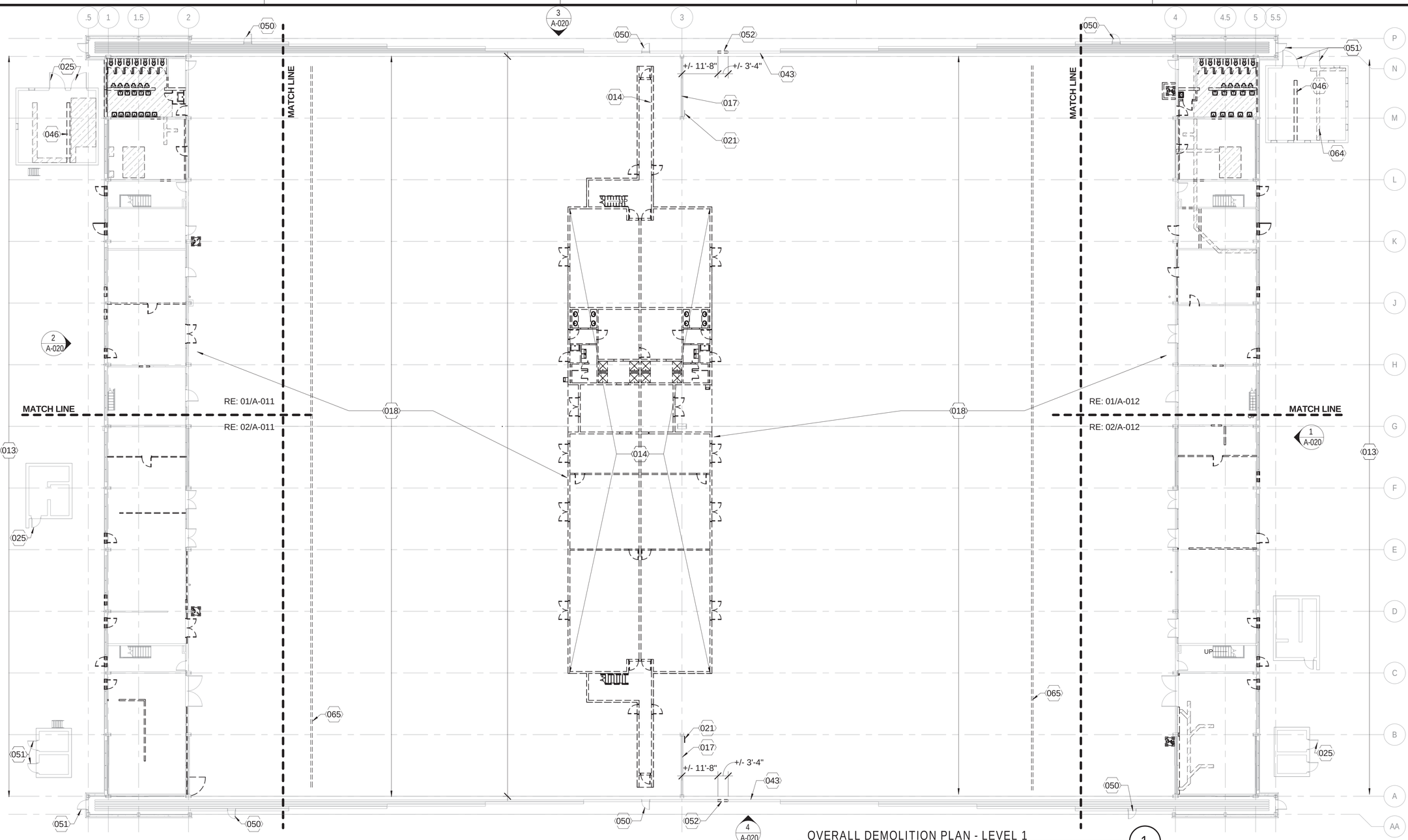

OVERALL DEMOLITION PLAN - LEVEL 1

1/16" = 1'-0"

A-010 (1)

GENERAL NOTES - DEMOLITION PLAN

A	ANY DISCREPANCIES BETWEEN DRAWINGS AND ACTUAL FIELD CONDITIONS SHALL BE REPORTED TO THE CONTRACTING OFFICER PRIOR TO PROCEEDING WITH WORK.
B	CONTRACTOR IS TO PROTECT HISTORIC ELEMENTS AS NOTED DURING CONSTRUCTION. CONTRACTOR IS TO VERIFY HISTORIC ELEMENTS TO BE PROTECTED WITH CONTRACTING OFFICER PRIOR TO PROCEEDING WITH WORK.
C	REFER TO STRUCTURAL FOR SPECIFIC AREAS OF STRUCTURAL DEMOLITION.
D	REMOVE ALL CEILINGS AND SUPPORT SYSTEMS. REMOVE ALL ABANDONED CEILING SYSTEMS AND THIER SUPPORTS. PROVIDE A CLEAN SPACE TO INITIATE NEW CONSTRUCTION.
E	PATCH AND REPAIR ALL HOLES IN WALLS, CEILINGS, CONCRETE COLUMNS, AND FLOORS PRODUCED DURING DEMOLITION.
F	REFER TO STRUCTURAL, FIRE PROTECTION, PLUMBING, MECHANICAL, AND ELECTRICAL DRAWINGS FOR LOCATIONS OF ADDITIONAL PENETRATIONS.

KEYNOTES

013	REMOVE AND DISPOSE OF ALL UNUSED/ABANDONED CONDUIT, PIPING, AND FIXTURES ALONG EXTERIOR WALL
014	REMOVE ENTIRE TWO STORY STRUCTURE IN ITS ENTIRETY, INCLUDING FOUNDATIONS AND UTILITIES. REFER FIRE PROTECTION, MECHANICAL, PLUMBING, AND ELECTRICAL.
017	EXISTING STRUCTURAL CROSS BRACING AND FOUNDATION, PROTECT DURING CONSTRUCTION
018	REMOVE FLOOR SLAB AT HANGAR BAYS, REFER STRUCTURAL FOR EXTENTS AND ALTERNATES
021	EXISTING HISTORIC LADDER AND CATWALK ABOVE TO REMAIN, INSTALL A HINGED ACCESS LADDER SECURITY GATE TO FACE OF EXISTING LADDER TO RESTRICT ACCESS; REFER: 14/A-422
025	EXISTING DOOR TO REMAIN, CLEAN AND PREPARE FOR NEW PAINT AND HARDWARE.
043	HANGAR DOOR LEAF TO BE LOCKED IN PLACE

KEYNOTES

046	REMOVE WALL,STEEL FRAMING SHALL BE INSTALLED PRIOR TO DEMOLITION OF WALL, RE: 3/S-400
050	EXISTING HISTORIC HANGAR MAN DOOR TO REMAIN, CLEAN AND PREPARE FOR NEW PAINT.
051	EXISTING HISTORIC STEEL DOOR TO REMAIN, CLEAN AND PREPARE FOR NEW PAINT.
052	REMOVE PORTION OF HANGAR DOOR FOR DOOR INSTALLATION
064	SAW CUT AND REMOVE PORTION OF CONCRETE SLAB TO TRENCH FOR NEW PLUMBING FIXTURES AND PIPE, REFER PLUMBING AND STRUCTURAL
065	REMOVE EXISTING MONORAIL CRANE HOIST ABOVE

0 32

SCALE: 1/16" = 1'-0"

PLAN NORTH

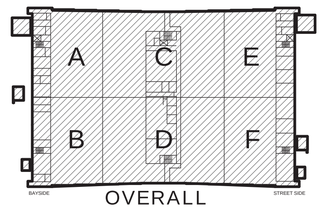

OVERALL KEY PLAN

SCALE(S) AS NOTED ON THIS SHEET ARE BASED ON FULL SIZE ANSI D (22" x 34") SHEET. DRAWFORM REVISION: 10 MARCH 2009

5/12/2015 7:32:43 AM

APPR	DATE	DESCRIPTION	SYM

NAVFAC

REGISTERED ARCHITECT CHRISTOPHER W. THORAN 22853 STATE OF TEXAS 5.15.2015

JACOBS/BURNS & McDONNELL

JACOBS/BURNS & MCDONNELL, A JOINT VENTURE
155 NORTH LAKE AVENSE
PASADENA, CA 91101 USA
TEL 1 (817) 735-6000
FAX 1 (817) 735-6148

JEG NO. FDWD7911 A/E INFO

APPROVED

FOR COMMANDER NAVFAC 6/11/2015

ACTIVITY

SATISFACTORY TO DATE

DES	CPC	DRW	MTH	CHK	WRP

PMDM

BRANCH MANAGER

CHIEF ENGARCH

FIRE PROTECTION

DEPARTMENT OF THE NAVY
NAVFAC PACIFIC
NAVAL FACILITIES ENGINEERING COMMAND – PACIFIC
JOINT BASE PEARL HARBOR - HICKAM
MARINE CORPS BASE HAWAII
KANEOHE, HAWAII

FY14 MCON PROJECT P-863
AIRCRAFT MAINTENANCE HANGAR UPGRADES

OVERALL DEMOLITION PLAN - LEVEL 1

SCALE	AS SHOWN
EPROJECT NO.	862914
CONSTR. CONTR. NO.	
NAVFAC DRAWING NO.	19043334
SHEET	69 OF 313

A-010

FINAL DESIGN - 15 MAY 2015

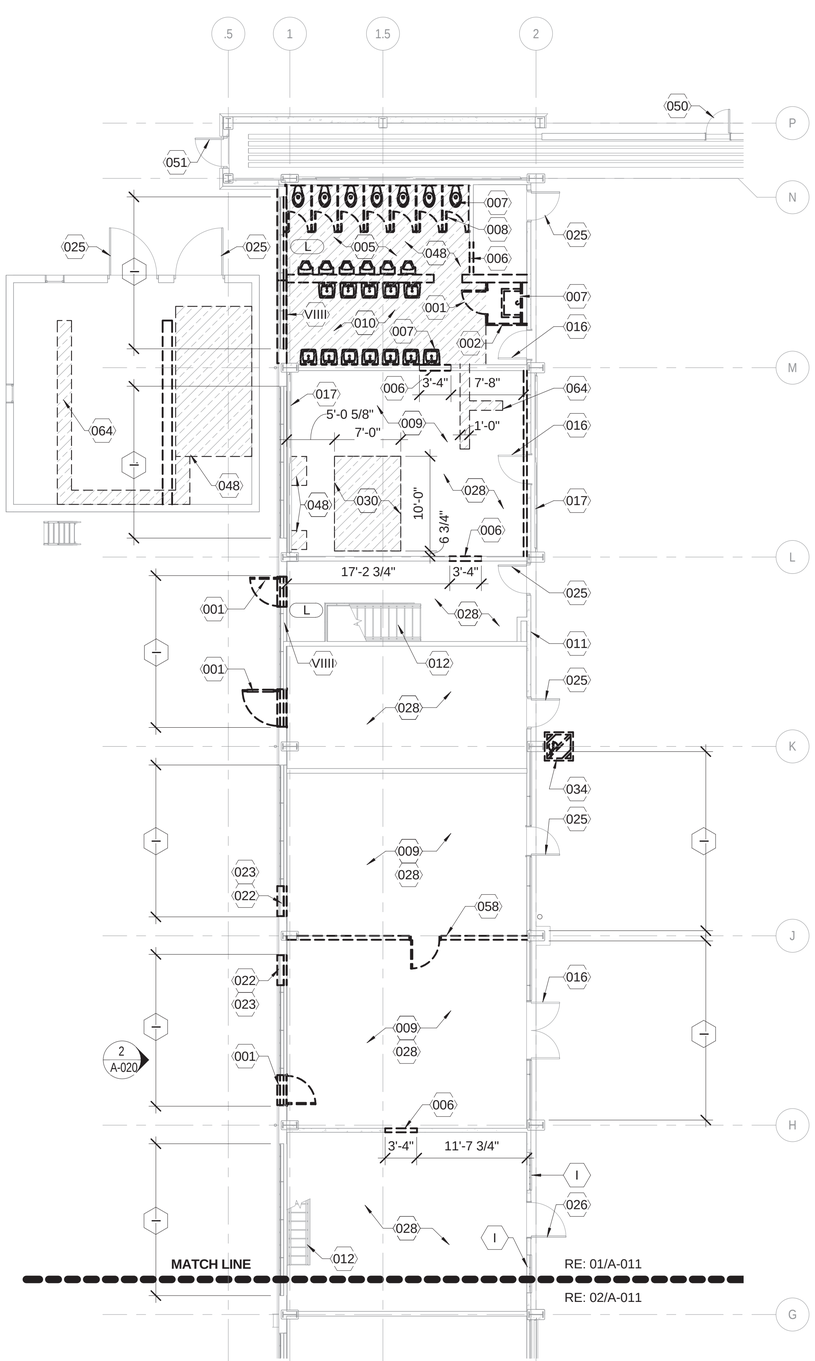

LEVEL 1 - PARTIAL DEMOLITION PLAN - AREA A

1/8" = 1'-0"

A-011
A-010

1

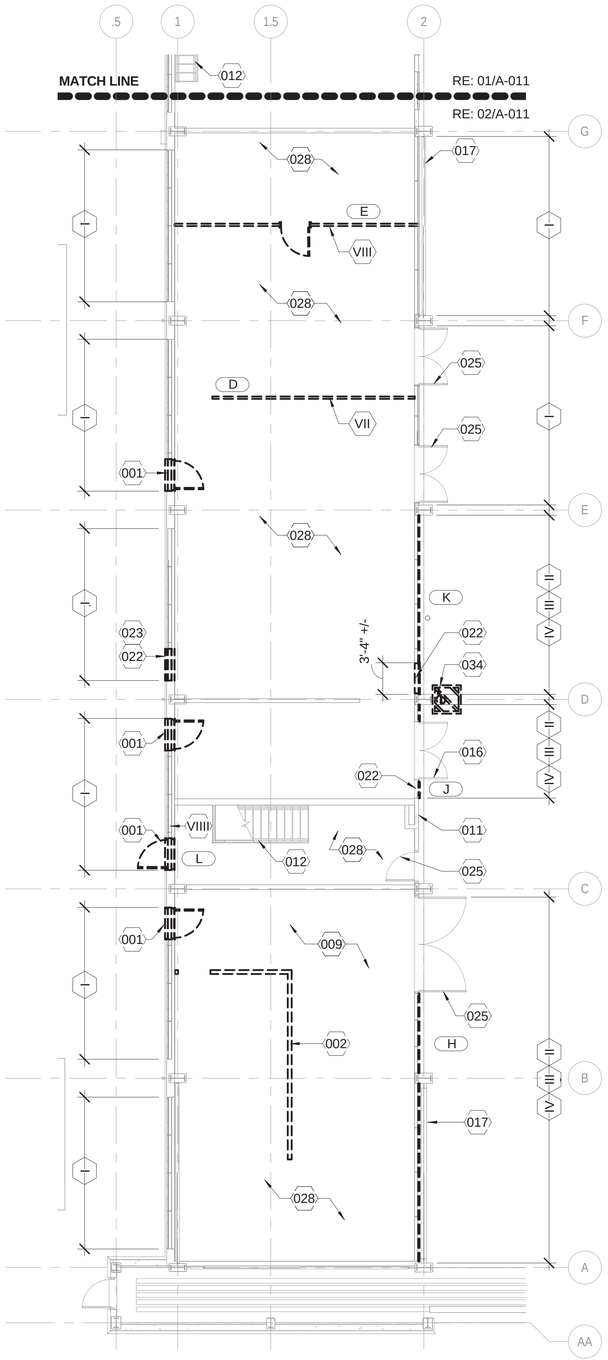

LEVEL 1 - PARTIAL DEMOLITION PLAN - AREA B

1/8" = 1'-0"

A-011
A-010

2

DEMOLITION LEGEND

- EXISTING ELEMENT TO REMAIN
- EXISTING ELEMENT TO BE DEMOLISHED
- AREA OF EXISTING FLOOR TO BE DEMOLISHED

0 16

SCALE: 1/8" = 1'-0"

PLAN NORTH

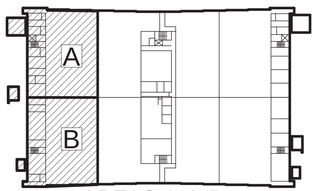

AREAS A & B
KEY PLAN

GENERAL NOTES - DEMOLITION PLANS

A	REFERENCE SHEET A-010 FOR TYPICAL NOTES

KEYNOTES

001	REMOVE AND DISPOSE OF EXISTING DOOR, FRAME, AND HARDWARE. DO NOT DAMAGE EXISTING STEEL SASH WINDOW SYSTEM EMBEDDED IN EXISTING WALLS WHERE APPLICABLE.
002	REMOVE AND DISPOSE OF EXISTING PLASTER PARTITION
005	REMOVE AND DISPOSE OF CERAMIC TILE FLOORING THIS AREA
006	REMOVE PORTION OF WALL FOR DOOR INSTALLATION
007	REMOVE AND DISPOSE OF PLUMBING FIXTURE(S) AND ALL EXPOSED PIPING AND TRIM
008	REMOVE AND DISPOSE OF ALL TOILET PARTITIONS, ACCESSORIES, MIRRORS, ETC
009	REMOVE AND DISPOSE OF LAY IN CEILING SYSTEM, ALL LIGHTING FIXTURES, AND OTHER DEVICES
010	REMOVE AND DISPOSE OF PLASTER CEILING SYSTEM, ALL LIGHTING FIXTURES, AND OTHER DEVICES
011	EXISTING HISTORIC FIRE HOSE CABINET TO REMAIN, PROTECT DURING CONSTRUCTION.
012	EXISTING HISTORIC STAIRS AND RAILING TO REMAIN, PREPARE RAILING AND STAIRS FOR PAINT.
016	EXISTING DOOR TO BE NON-OPERABLE AND REMAIN IN CLOSED POSITION
017	EXISTING STRUCTURAL CROSS BRACING AND FOUNDATION, PROTECT DURING CONSTRUCTION
022	SAW CUT AND REMOVE PORTION OF CONCRETE WALL FOR NEW DOOR
023	REMOVE PORTION OF EXISTING PLASTER WALL AND STEEL WINDOW FOR NEW DOOR, PROTECT REMAINING STEEL SASH WINDOW SYSTEM EMBEDDED IN WALL
025	EXISTING DOOR TO REMAIN, CLEAN AND PREPARE FOR NEW PAINT AND HARDWARE.
026	EXISTING HISTORIC VAULT DOOR TO REMAIN, CLEAN AND PREPARE FOR NEW PAINT.
028	CLEAN AND PREPARE STRUCTURE ABOVE FOR NEW PAINT
030	SAW CUT AND REMOVE PORTION OF CONCRETE SLAB AND STRUCTURE FOR NEW ELEVATOR, REFER STRUCTURAL
034	REMOVE EMERGENCY EYEWASH AND SHOWER STATION, REFER PLUMBING
048	AREA OF FLOOR SLAB TO BE REMOVED FOR NEW PLUMBING FIXTURES AND PIPE, REFER PLUMBING AND STRUCTURAL
050	EXISTING HISTORIC HANGAR MAN DOOR TO REMAIN, CLEAN AND PREPARE FOR NEW PAINT.
051	EXISTING HISTORIC STEEL DOOR TO REMAIN, CLEAN AND PREPARE FOR NEW PAINT.
058	REMOVE EXISTING WALL
064	SAW CUT AND REMOVE PORTION OF CONCRETE SLAB TO TRENCH FOR NEW PLUMBING FIXTURES AND PIPE, REFER PLUMBING AND STRUCTURAL

KEYNOTES - HISTORIC WINDOWS

I	LOCATION OF HISTORIC STEEL SASH WINDOW SYSTEM EMBEDDED IN EXISTING WALL TO REMAIN, PROTECT DURING CONSTRUCTION
II	REMOVE EXISTING PLASTER PARTITION TO EXPOSE HISTORIC STEEL SASH WINDOW SYSTEM.
III	CAREFULLY REMOVE AND SALVAGE STEEL SASH WINDOW SYSTEM, REFURBISH STEEL FRAME AND PREPARE FOR REINSTALLATION IN ORIGINAL LOCATION.
IV	REMOVE AND SALVAGE INTACT GLAZING. INSTALL GLAZING AS SCHEDULED
VII	CAREFULLY REMOVE AND SALVAGE STEEL SASH WINDOW SYSTEM AND GLAZING. REFURBISH STEEL FRAME, GLAZING, AND REINSTALL IN NEW LOCATION. REFER TO 1/A-107.
VIII	CAREFULLY REMOVE AND SALVAGE STEEL SASH WINDOW SYSTEM, GLAZING, DOOR, FRAME, AND ASSOCIATED HARDWARE. REFURBISH STEEL FRAME, GLAZING, AND REINSTALL IN NEW LOCATION. REFER TO 2/A-107
VIIII	EXISTING STEEL SASH WINDOW SYSTEM PARTIALLY EXPOSED IN WALL. EXPOSED STEEL SASH AND GLASS TO BE CLEANED AND PAINTED, PROTECT DURING CONSTRUCTION.

APPR. | DATE | DESCRIPTION | SYM

NAVFAC

REGISTERED ARCHITECT — MATTHEW T. HOKANSON — 5.15.2015 — 22853 — STATE OF TEXAS

JACOBS/BURNS & McDONNELL

JACOBS/BURNS & MCDONNELL, A JOINT VENTURE
155 NORTH LAKE AVENUE
PASADENA, CA 91101 USA
TEL 1 (817) 735-6000
FAX 1 (817) 735-6148

JEG NO. FDWD7911 | A/E INFO

APPROVED
FOR COMMANDER NAVFAC 6/11/2015

ACTIVITY

SATISFACTORY TO DATE

DES	CPC	DRW	MTH	CHK	WRP

PWDM
BRANCH MANAGER
CHIEF ENGARCH
FIRE PROTECTION

NAVAL FACILITIES ENGINEERING COMMAND ~ PACIFIC
JOINT BASE PEARL HARBOR - HICKAM
KANEOHE, HAWAII

DEPARTMENT OF THE NAVY
NAVFAC PACIFIC
NAVAL FACILITIES ENGINEERING COMMAND
MARINE CORPS BASE HAWAII
FY14 MCON PROJECT P-863
AIRCRAFT MAINTENANCE HANGAR UPGRADES

PARTIAL DEMOLITION PLAN - LEVEL 1 AREAS A & B

SCALE	AS SHOWN
EPROJECT NO.	862914
CONSTR. CONTR. NO.	
NAVFAC DRAWING NO.	19043335
SHEET	70 OF 313

A-011

FINAL DESIGN - 01 MAY 2015

5/12/2015 7:32:53 AM

SCALE(S) AS NOTED ON THIS SHEET ARE BASED ON FULL SIZE ANSI D (22 x 34) SHEET. DRAWFORM REVISION: 10 MARCH 2009

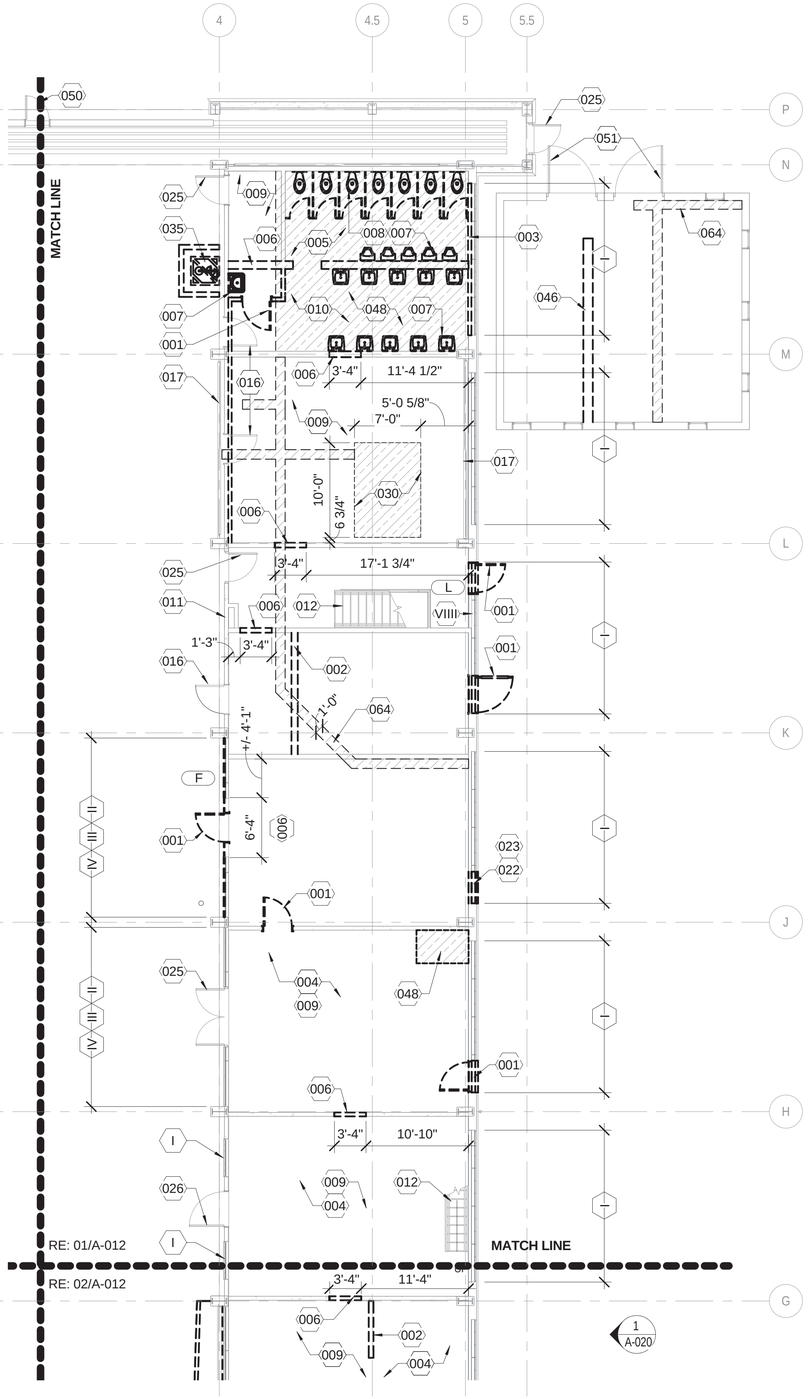

LEVEL 1 - PARTIAL DEMOLITION PLAN - AREA E

1/8" = 1'-0"

A-012
A-010

1

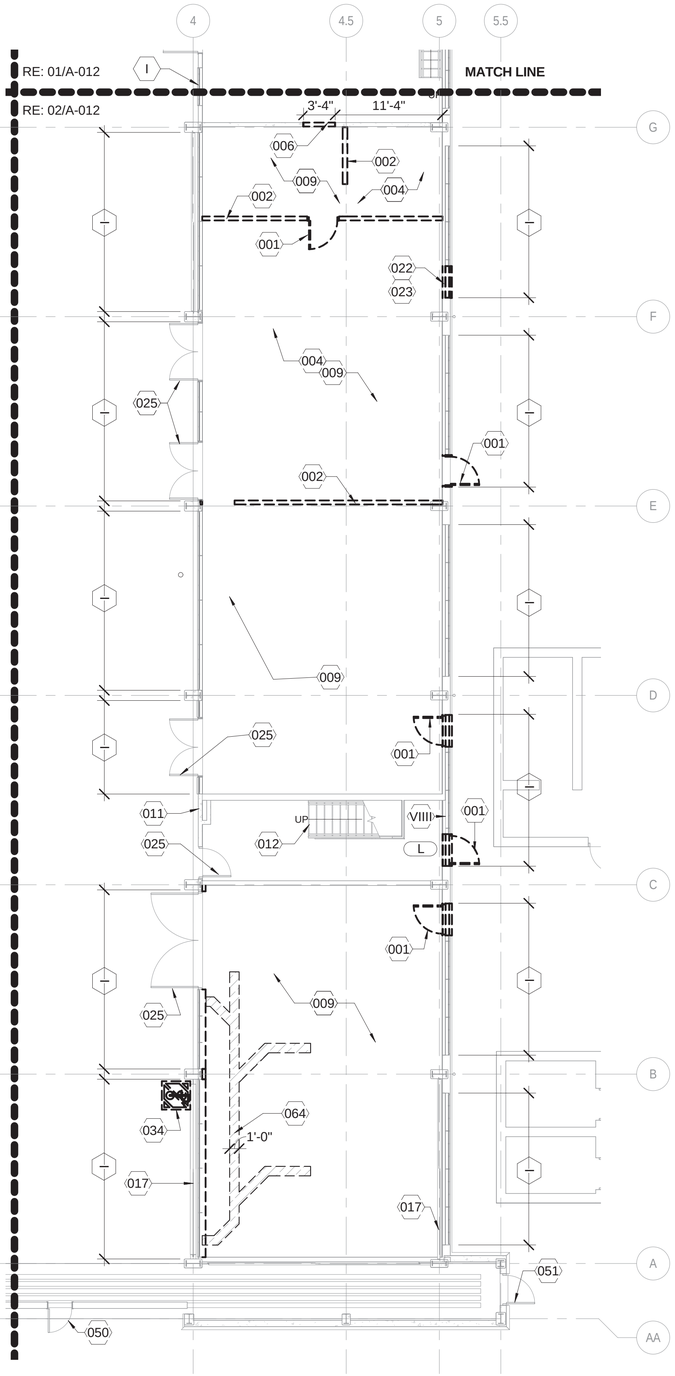

LEVEL 1 - PARTIAL DEMOLITION PLAN - AREA F

1/8" = 1'-0"

A-012
A-010

2

0 16

SCALE: 1/8" = 1'-0"

GENERAL NOTES - DEMOLITION PLANS

A	REFERENCE SHEET A-010 FOR TYPICAL NOTES

KEYNOTES

001	REMOVE AND DISPOSE OF EXISTING DOOR, FRAME, AND HARDWARE. DO NOT DAMAGE EXISTING STEEL SASH WINDOW SYSTEM EMBEDDED IN EXISTING WALLS WHERE APPLICABLE.
002	REMOVE AND DISPOSE OF EXISTING PLASTER PARTITION
003	REMOVE AND DISPOSE OF EXISTING GYPSUM BOARD PARTITION
004	REMOVE AND DISPOSE OF RESILIENT TILE FLOORING THIS AREA
005	REMOVE AND DISPOSE OF CERAMIC TILE FLOORING THIS AREA
006	REMOVE PORTION OF WALL FOR DOOR INSTALLATION
007	REMOVE AND DISPOSE OF PLUMBING FIXTURE(S) AND ALL EXPOSED PIPING AND TRIM
008	REMOVE AND DISPOSE OF ALL TOILET PARTITIONS, ACCESSORIES, MIRRORS, ETC
009	REMOVE AND DISPOSE OF LAY IN CEILING SYSTEM, ALL LIGHTING FIXTURES, AND OTHER DEVICES
010	REMOVE AND DISPOSE OF PLASTER CEILING SYSTEM, ALL LIGHTING FIXTURES, AND OTHER DEVICES
011	EXISTING HISTORIC FIRE HOSE CABINET TO REMAIN, PROTECT DURING CONSTRUCTION.
012	EXISTING HISTORIC STAIRS AND RAILING TO REMAIN, PREPARE RAILING AND STAIRS FOR PAINT.
016	EXISTING DOOR TO BE NON-OPERABLE AND REMAIN IN CLOSED POSITION
017	EXISTING STRUCTURAL CROSS BRACING AND FOUNDATION, PROTECT DURING CONSTRUCTION
022	SAW CUT AND REMOVE PORTION OF CONCRETE WALL FOR NEW DOOR
023	REMOVE PORTION OF EXISTING PLASTER WALL AND STEEL WINDOW FOR NEW DOOR, PROTECT REMAINING STEEL SASH WINDOW SYSTEM EMBEDDED IN WALL
025	EXISTING DOOR TO REMAIN, CLEAN AND PREPARE FOR NEW PAINT AND HARDWARE.
026	EXISTING HISTORIC VAULT DOOR TO REMAIN, CLEAN AND PREPARE FOR NEW PAINT.
030	SAW CUT AND REMOVE PORTION OF CONCRETE SLAB AND STRUCTURE FOR NEW ELEVATOR, REFER STRUCTURAL
034	REMOVE EMERGENCY EYEWASH AND SHOWER STATION, REFER PLUMBING
035	REMOVE EMERGENCY EYEWASH/SHOWER STATION AND CONCRETE CURB, REFER PLUMBING
046	REMOVE WALL,STEEL FRAMING SHALL BE INSTALLED PRIOR TO DEMOLITION OF WALL, RE: 3/S-400
048	AREA OF FLOOR SLAB TO BE REMOVED FOR NEW PLUMBING FIXTURES AND PIPE, REFER PLUMBING AND STRUCTURAL
050	EXISTING HISTORIC HANGAR MAN DOOR TO REMAIN, CLEAN AND PREPARE FOR NEW PAINT.
051	EXISTING HISTORIC STEEL DOOR TO REMAIN, CLEAN AND PREPARE FOR NEW PAINT.
064	SAW CUT AND REMOVE PORTION OF CONCRETE SLAB TO TRENCH FOR NEW PLUMBING FIXTURES AND PIPE, REFER PLUMBING AND STRUCTURAL

KEYNOTES - HISTORIC WINDOWS

I	LOCATION OF HISTORIC STEEL SASH WINDOW SYSTEM EMBEDDED IN EXISTING WALL TO REMAIN, PROTECT DURING CONSTRUCTION
II	REMOVE EXISTING PLASTER PARTITION TO EXPOSE HISTORIC STEEL SASH WINDOW SYSTEM.
III	CAREFULLY REMOVE AND SALVAGE STEEL SASH WINDOW SYSTEM, REFURBISH STEEL FRAME AND PREPARE FOR REINSTALLATION IN ORIGINAL LOCATION.
IV	REMOVE AND SALVAGE INTACT GLAZING. INSTALL GLAZING AS SCHEDULED
VIII	EXISTING STEEL SASH WINDOW SYSTEM PARTIALLY EXPOSED IN WALL. EXPOSED STEEL SASH AND GLASS TO BE CLEANED AND PAINTED, PROTECT DURING CONSTRUCTION.

DEMOLITION LEGEND

EXISTING ELEMENT TO REMAIN

EXISTING ELEMENT TO BE DEMOLISHED

AREA OF EXISTING FLOOR TO BE DEMOLISHED

PLAN NORTH

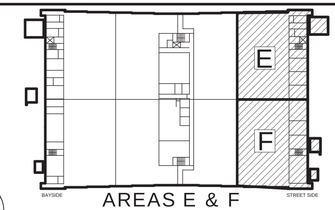

AREAS E & F

KEY PLAN

APPR.	
DATE	
DESCRIPTION	
SYM	

NAVFAC

REGISTERED ARCHITECT
MATTHEW THOMAS PAGE
5.15.2015
22853
STATE OF TEXAS

JACOBS/ Burns & McDonnell

JACOBS/BURNS & MCDONNELL, A JOINT VENTURE
155 NORTH LAKE AVENUE
PASADENA, CA 91101 USA
TEL 1 (817) 735-6000
FAX 1 (817) 735-6148

JEG NO. FDW07911 A/E INFO

APPROVED
FOR COMMANDER NAVFAC 6/11/2015

ACTIVITY

SATISFACTORY TO DATE

DES	CPC	DRW	MTH	CHK	WRP

PM/DM
BRANCH MANAGER
CHIEF ENGINEER
FIRE PROTECTION

DEPARTMENT OF THE NAVY
NAVFAC PACIFIC
MARINE CORPS BASE HAWAII
NAVAL FACILITIES ENGINEERING COMMAND ~ PACIFIC
JOINT BASE PEARL HARBOR - HICKAM
KANEOHE, HAWAII

FY14 MCON PROJECT P-863
AIRCRAFT MAINTENANCE HANGAR UPGRADES

PARTIAL DEMOLITION PLAN - LEVEL 1 AREAS E & F

SCALE	AS SHOWN
EPROJECT NO.	862914
CONSTR. CONTR. NO.	
NAVFAC DRAWING NO.	19043336
SHEET	71 OF 313

A-012

5/12/2015 7:33:04 AM

FINAL EDSON - 15 MAY 2015

SCALE(S) AS NOTED ON THIS SHEET ARE BASED ON FULL SIZE ANSI D (22" x 34") SHEET. DRAWFORM REVISION: 10 MARCH 2009

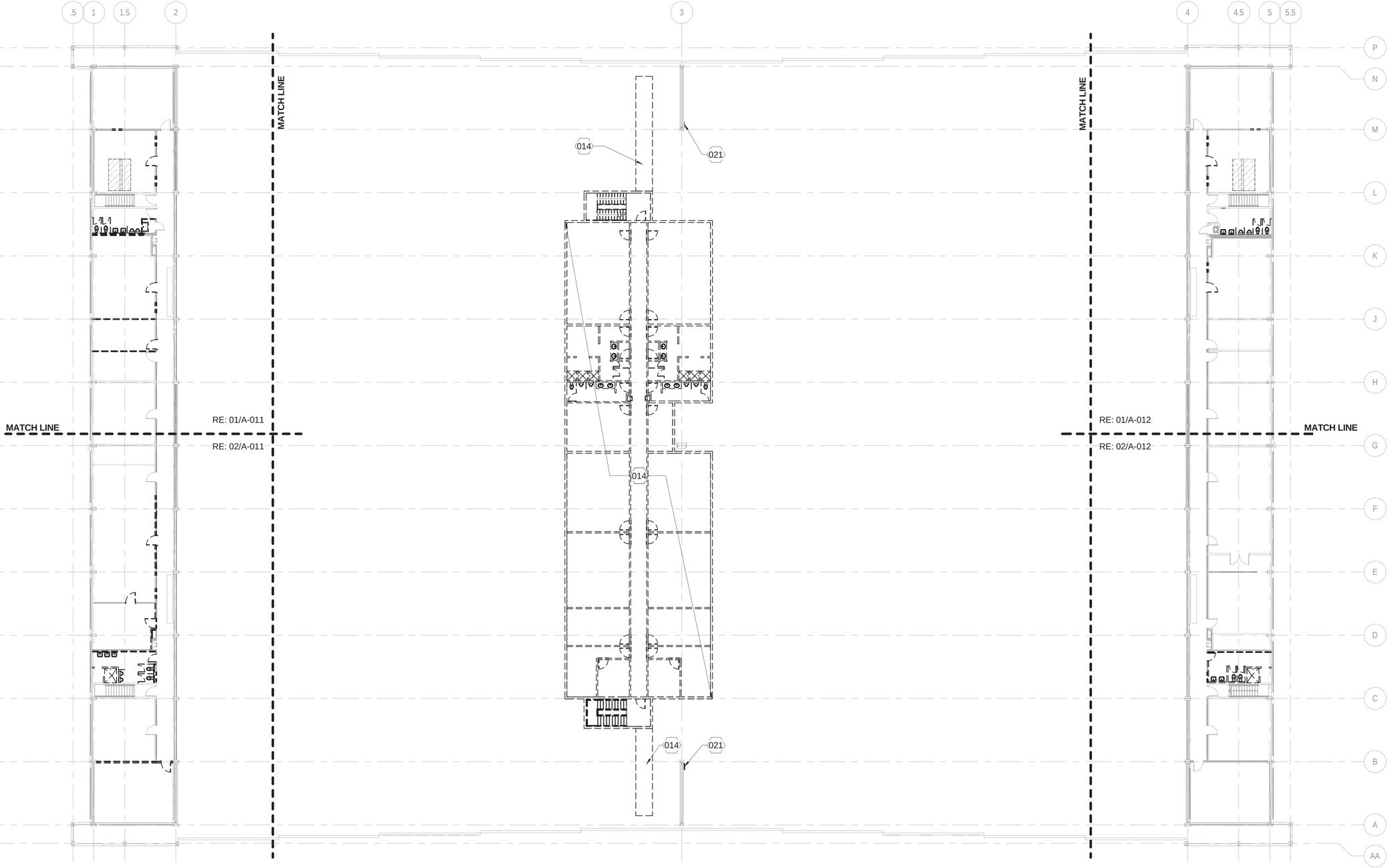

OVERALL DEMOLITION PLAN - LEVEL 2

1/16" = 1'-0"

A-013 (1)

GENERAL NOTES - DEMOLITION PLANS

A	REFERENCE SHEET A-010 FOR TYPICAL NOTES

KEYNOTES

014	REMOVE ENTIRE TWO STORY STRUCTURE IN ITS ENTIRETY, INCLUDING FOUNDATIONS AND UTILITIES. REFER FIRE PROTECTION, MECHANICAL, PLUMBING, AND ELECTRICAL.
021	EXISTING HISTORIC LADDER AND CATWALK ABOVE TO REMAIN, INSTALL A HINGED ACCESS LADDER SECURITY GATE TO FACE OF EXISTING LADDER TO RESTRICT ACCESS; REFER: 14/A-422

0 32

SCALE: 1/16" = 1'-0"

PLAN NORTH

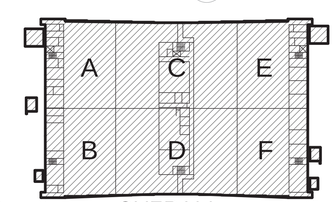

OVERALL KEY PLAN

SYM	DESCRIPTION	DATE	APPR

NAVFAC

REGISTERED ARCHITECT
THEW THOMAS
05.15.2015
22853
STATE OF TEXAS

SEAL

JACOBS/ Burns & McDonnell

JACOBS/BURNS & MCDONNELL, A JOINT VENTURE
155 NORTH LAKE AVENUE
PASADENA, CA 91101 USA
TEL 1 (817) 735-6000
FAX 1 (817) 735-6148

JEG NO. FDWD7911 A/E INFO

APPROVED

FOR COMMANDER NAVFAC 6/11/2015

ACTIVITY

SATISFACTORY TO DATE

DES	CPC	DRW	MTH	CHK	WRP

PM/DM KAO

BRANCH MANAGER

CHIEF ENG/ARCH

FIRE PROTECTION

DEPARTMENT OF THE NAVY
NAVAL FACILITIES ENGINEERING COMMAND
NAVFAC PACIFIC
NAVAL FACILITIES ENGINEERING COMMAND ~ PACIFIC
JOINT BASE PEARL HARBOR - HICKAM
MARINE CORPS BASE HAWAII
KANEOHE, HAWAII

FY14 MCON PROJECT P-863
AIRCRAFT MAINTENANCE HANGAR UPGRADES

DEMOLITION PLAN - LEVEL 2

SCALE AS SHOWN

EPROJECT NO. 862914

CONSTR. CONTR. NO.

NAVFAC DRAWING NO. 19043337

SHEET 72 OF 313

A-013

FINAL DESIGN - 15 MAY 2015

SCALE(S) AS NOTED ON THIS SHEET ARE BASED ON FULL SIZE ANSI D (22' x 34') SHEET. DRAWFORM REVISION: 10 MARCH 2009

5/12/2015 7:33:15 AM

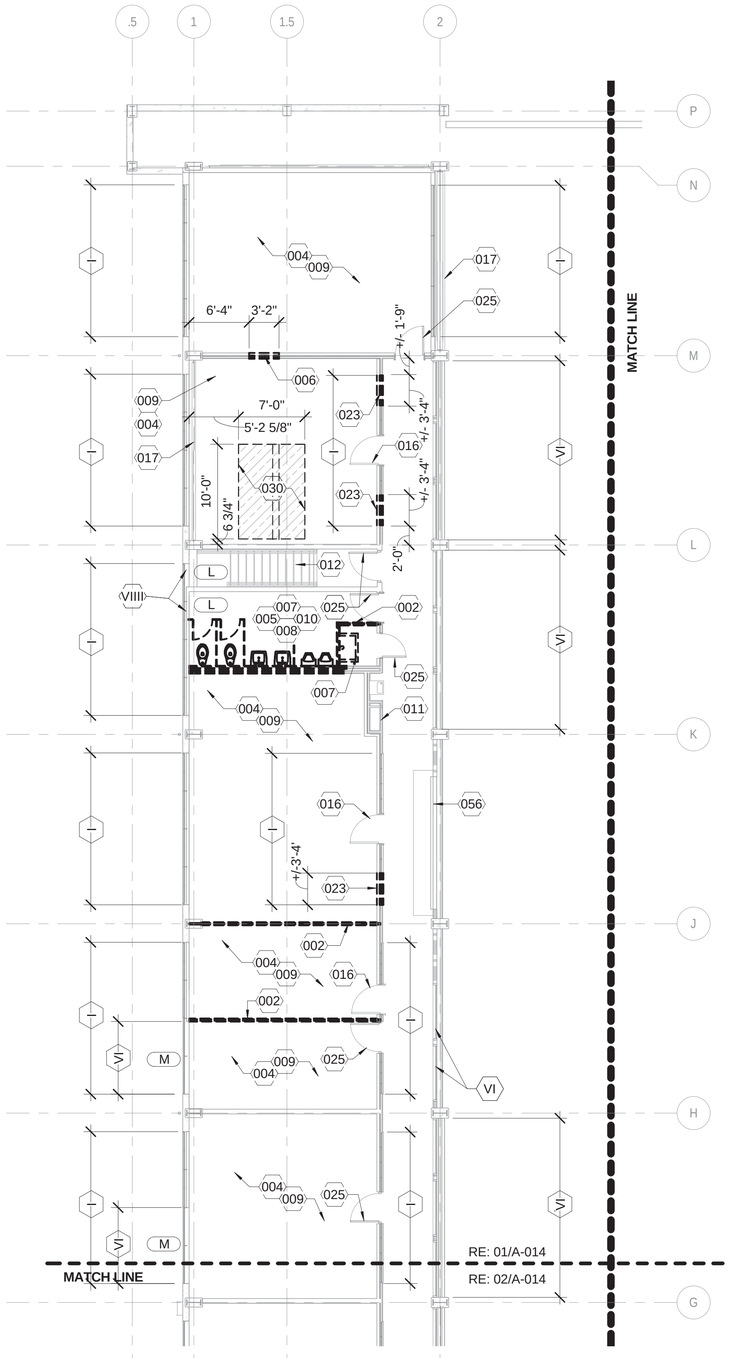

LEVEL 2 - PARTIAL DEMOLITION PLAN - AREA A

1/8" = 1'-0"

A-014
A-013

1

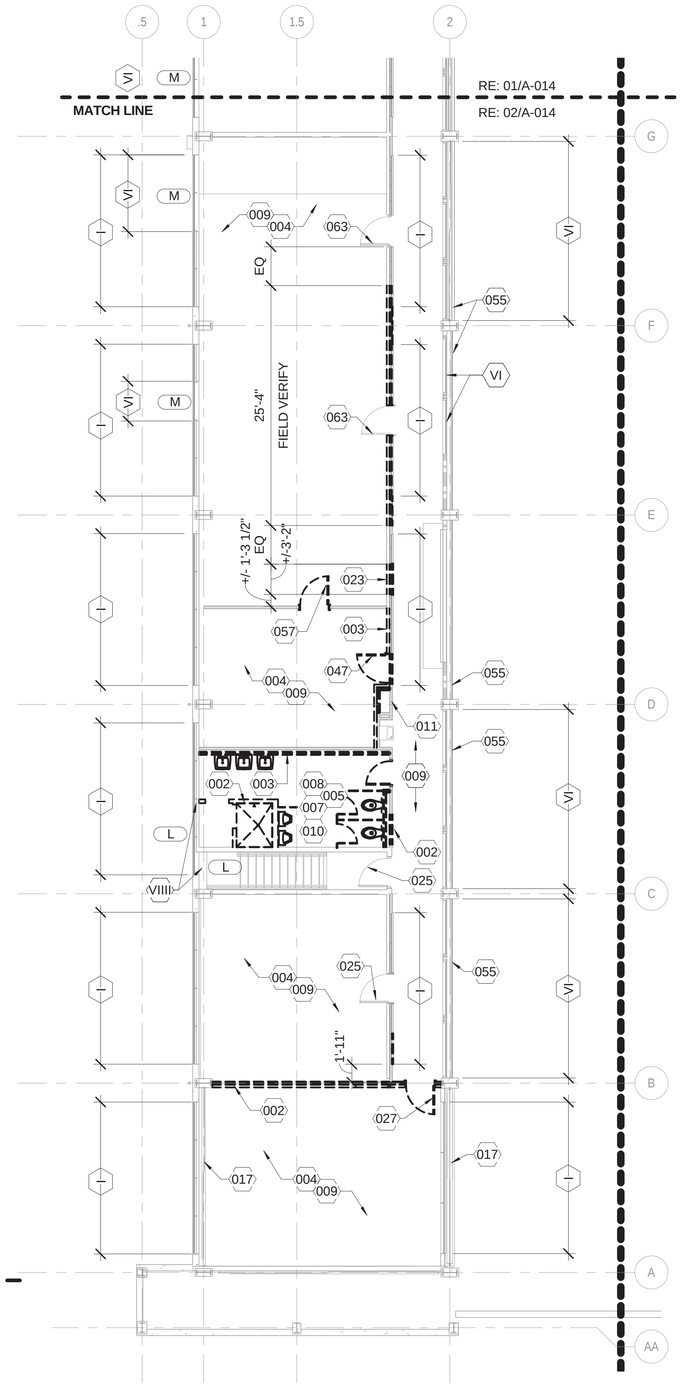

LEVEL 2 - PARTIAL DEMOLITION PLAN - AREA B

1/8" = 1'-0"

A-014
A-013

2

0 16

SCALE: 1/8" = 1'-0"

GENERAL NOTES - DEMOLITION PLANS

A	REFERENCE SHEET A-010 FOR TYPICAL NOTES

KEYNOTES

002	REMOVE AND DISPOSE OF EXISTING PLASTER PARTITION
003	REMOVE AND DISPOSE OF EXISTING GYPSUM BOARD PARTITION
004	REMOVE AND DISPOSE OF RESILIENT TILE FLOORING THIS AREA
005	REMOVE AND DISPOSE OF CERAMIC TILE FLOORING THIS AREA
006	REMOVE PORTION OF WALL FOR DOOR INSTALLATION
007	REMOVE AND DISPOSE OF PLUMBING FIXTURE(S) AND ALL EXPOSED PIPING AND TRIM
008	REMOVE AND DISPOSE OF ALL TOILET PARTITIONS, ACCESSORIES, MIRRORS, ETC
009	REMOVE AND DISPOSE OF LAY IN CEILING SYSTEM, ALL LIGHTING FIXTURES, AND OTHER DEVICES
010	REMOVE AND DISPOSE OF PLASTER CEILING SYSTEM, ALL LIGHTING FIXTURES, AND OTHER DEVICES
011	EXISTING HISTORIC FIRE HOSE CABINET TO REMAIN, PROTECT DURING CONSTRUCTION.
012	EXISTING HISTORIC STAIRS AND RAILING TO REMAIN, PREPARE RAILING AND STAIRS FOR PAINT.
016	EXISTING DOOR TO BE NON-OPERABLE AND REMAIN IN CLOSED POSITION
017	EXISTING STRUCTURAL CROSS BRACING AND FOUNDATION, PROTECT DURING CONSTRUCTION
023	REMOVE PORTION OF EXISTING PLASTER WALL AND STEEL WINDOW FOR NEW DOOR, PROTECT REMAINING STEEL SASH WINDOW SYSTEM EMBEDDED IN WALL
025	EXISTING DOOR TO REMAIN, CLEAN AND PREPARE FOR NEW PAINT AND HARDWARE.
027	REMOVE EXISTING DOOR AND FRAME
030	SAW CUT AND REMOVE PORTION OF CONCRETE SLAB AND STRUCTURE FOR NEW ELEVATOR, REFER STRUCTURAL
039	INTERIOR PARTITION TO BE REMOVED TO FACE OF EXISTING 2" PLASTER PARTITION TO ALLOW FOR INSTALLATION OF RELOCATED STEEL SASH/GLASS PARTITION, REFER PLANS.
047	REMOVE DOOR, EXISTING FRAME TO REMAIN. MAKE THE NECESSARY MODIFICATIONS TO THE EXISTING FRAME TO RECEIVE A NEW DOOR, REFER: FLOOR PLANS
055	CLEAN AND PREPARE EXISTING HISTORIC GUARDRAIL FOR PAINT.
056	EXISTING OVER HEAD DOORS TO REMAIN, PROTECT DURING CONSTRUCTION
057	REMOVE EXISTING DOOR, AND REPLACE FRAME FOR NEW CASED OPENING FRAME
063	EXISTING DOOR TO REMAIN AS-IS; PROTECT DURING CONSTRUCTION

KEYNOTES - HISTORIC WINDOWS

I	LOCATION OF HISTORIC STEEL SASH WINDOW SYSTEM EMBEDDED IN EXISTING WALL TO REMAIN, PROTECT DURING CONSTRUCTION
VI	EXISTING WINDOWS TO REMAIN, AND AT EXTERIOR CONDITIONS WINDOWS TO BE FIXED IN PLACE AND CAULKED. PROTECT DURING CONSTRUCTION.
VIII	EXISTING STEEL SASH WINDOW SYSTEM PARTIALLY EXPOSED IN WALL. EXPOSED STEEL SASH AND GLASS TO BE CLEANED AND PAINTED, PROTECT DURING CONSTRUCTION.

DEMOLITION LEGEND

EXISTING ELEMENT TO REMAIN

EXISTING ELEMENT TO BE DEMOLISHED

AREA OF EXISTING FLOOR TO BE DEMOLISHED

PLAN NORTH

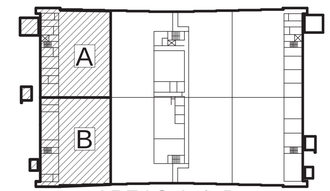

AREAS A & B
KEY PLAN

APPR	DATE	DESCRIPTION	SYM

NAVFAC

REGISTERED ARCHITECT MATTHEW THOMAS 22853 STATE OF TEXAS 5/15/2015

JACOBS/ Burns & McDonnell

JACOBS/BURNS & MCDONNELL, A JOINT VENTURE
155 NORTH LAKE AVENUE
PASADENA, CA 91101 USA
TEL 1 (817) 735-6000
FAX 1 (817) 735-6148

JEG NO. FDWD7911 A/E INFO

APPROVED
FOR COMMANDER NAVFAC 6/11/2015

ACTIVITY

SATISFACTORY TO DATE

DES	CPC	DRW	MTH	CHK	WRP

PM/DM
BRANCH MANAGER
CHIEF ENGR/ARCH
FIRE PROTECTION

DEPARTMENT OF THE NAVY
NAVFAC PACIFIC
NAVAL FACILITIES ENGINEERING COMMAND ~ PACIFIC
JOINT BASE PEARL HARBOR - HICKAM
MARINE CORPS BASE HAWAII
KANEOHE, HAWAII
FY14 MCON PROJECT P-863
AIRCRAFT MAINTENANCE HANGAR UPGRADES
PARTIAL DEMOLITION PLAN - LEVEL 2 AREAS A & B

SCALE	AS SHOWN
EPROJECT NO.	862914
CONSTR. CONTR. NO.	
NAVFAC DRAWING NO.	19043338
SHEET	73 OF 313

A-014

FINAL DESIGN - 15 MAY 2015

5/12/2015 7:33:25 AM

SCALE(S) AS NOTED ON THIS SHEET ARE BASED ON FULL SIZE ANSI D (22 x 34) SHEET. DRAWFORM REVISION: 10 MARCH 2009

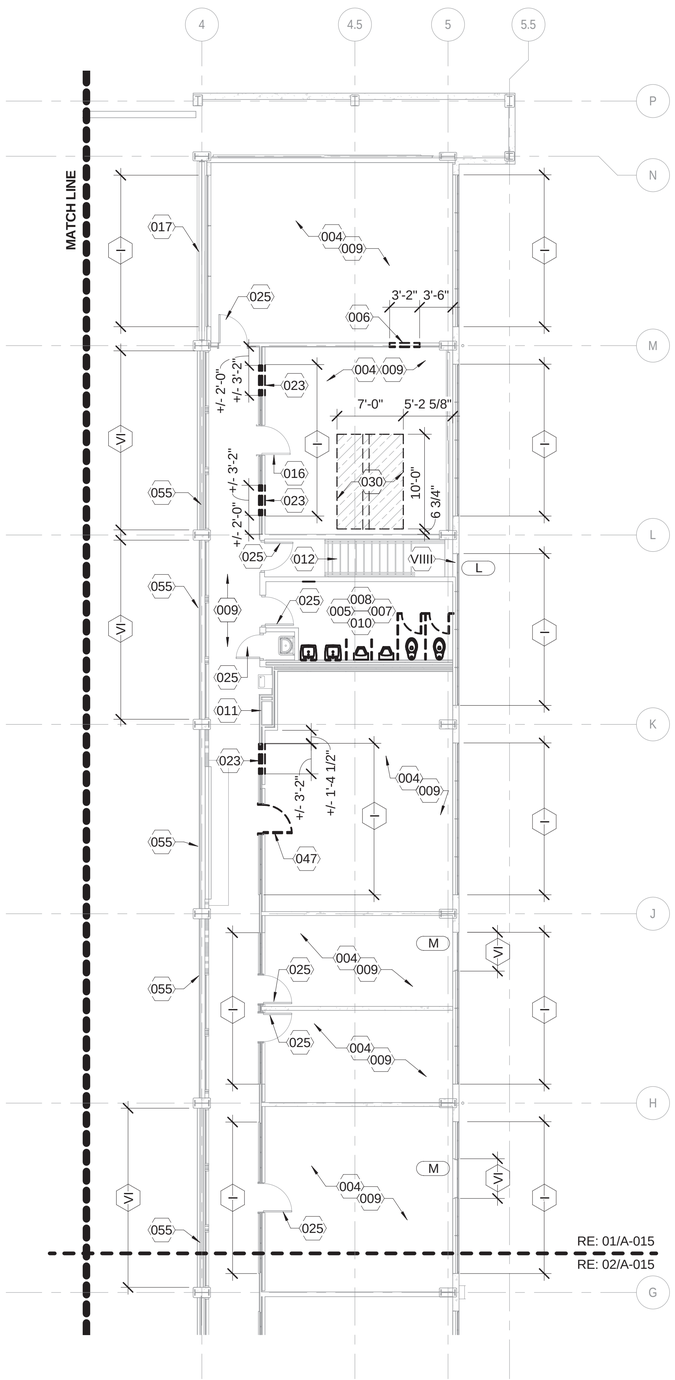

LEVEL 2 - PARTIAL DEMOLITION PLAN - AREA E

1/8" = 1'-0"

A-015
A-013

1

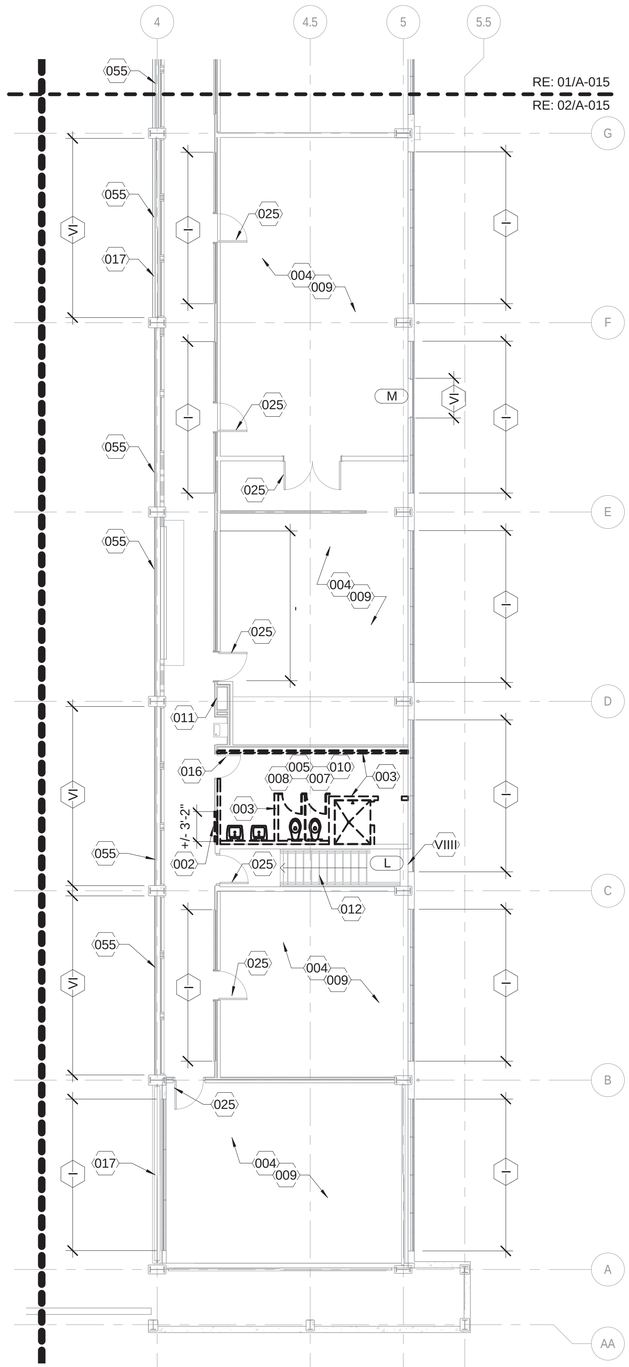

LEVEL 2 - PARTIAL DEMOLITION PLAN - AREA F

1/8" = 1'-0"

A-015
A-013

2

0 16

SCALE: 1/8" = 1'-0"

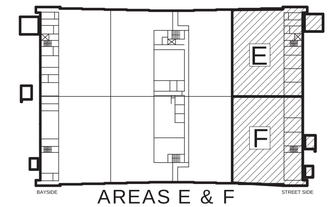

PLAN NORTH

AREAS E & F

KEY PLAN

GENERAL NOTES - DEMOLITION PLANS

A	REFERENCE SHEET A-010 FOR TYPICAL NOTES

KEYNOTES

002	REMOVE AND DISPOSE OF EXISTING PLASTER PARTITION
003	REMOVE AND DISPOSE OF EXISTING GYPSUM BOARD PARTITION
004	REMOVE AND DISPOSE OF RESILIENT TILE FLOORING THIS AREA
005	REMOVE AND DISPOSE OF CERAMIC TILE FLOORING THIS AREA
006	REMOVE PORTION OF WALL FOR DOOR INSTALLATION
007	REMOVE AND DISPOSE OF PLUMBING FIXTURE(S) AND ALL EXPOSED PIPING AND TRIM
008	REMOVE AND DISPOSE OF ALL TOILET PARTITIONS, ACCESSORIES, MIRRORS, ETC
009	REMOVE AND DISPOSE OF LAY IN CEILING SYSTEM, ALL LIGHTING FIXTURES, AND OTHER DEVICES
010	REMOVE AND DISPOSE OF PLASTER CEILING SYSTEM, ALL LIGHTING FIXTURES, AND OTHER DEVICES
011	EXISTING HISTORIC FIRE HOSE CABINET TO REMAIN, PROTECT DURING CONSTRUCTION.
012	EXISTING HISTORIC STAIRS AND RAILING TO REMAIN, PREPARE RAILING AND STAIRS FOR PAINT.
016	EXISTING DOOR TO BE NON-OPERABLE AND REMAIN IN CLOSED POSITION
017	EXISTING STRUCTURAL CROSS BRACING AND FOUNDATION, PROTECT DURING CONSTRUCTION
023	REMOVE PORTION OF EXISTING PLASTER WALL AND STEEL WINDOW FOR NEW DOOR, PROTECT REMAINING STEEL SASH WINDOW SYSTEM EMBEDDED IN WALL
025	EXISTING DOOR TO REMAIN, CLEAN AND PREPARE FOR NEW PAINT AND HARDWARE.
030	SAW CUT AND REMOVE PORTION OF CONCRETE SLAB AND STRUCTURE FOR NEW ELEVATOR, REFER STRUCTURAL
047	REMOVE DOOR, EXISTING FRAME TO REMAIN. MAKE THE NECESSARY MODIFICATIONS TO THE EXISTING FRAME TO RECEIVE A NEW DOOR, REFER: FLOOR PLANS
055	CLEAN AND PREPARE EXISTING HISTORIC GUARDRAIL FOR PAINT.

KEYNOTES - HISTORIC WINDOWS

I	LOCATION OF HISTORIC STEEL SASH WINDOW SYSTEM EMBEDDED IN EXISTING WALL TO REMAIN, PROTECT DURING CONSTRUCTION
VI	EXISTING WINDOWS TO REMAIN, AND AT EXTERIOR CONDITIONS WINDOWS TO BE FIXED IN PLACE AND CAULKED. PROTECT DURING CONSTRUCTION.
VIII	EXISTING STEEL SASH WINDOW SYSTEM PARTIALLY EXPOSED IN WALL. EXPOSED STEEL SASH AND GLASS TO BE CLEANED AND PAINTED, PROTECT DURING CONSTRUCTION.

DEMOLITION LEGEND

EXISTING ELEMENT TO REMAIN

EXISTING ELEMENT TO BE DEMOLISHED

AREA OF EXISTING FLOOR TO BE DEMOLISHED

APPR	DATE	DESCRIPTION	SYM

NAVFAC

REGISTERED ARCHITECT — WILLIAM THOMAS KIRKPATRICK — 05-15-2015 — 22853 — STATE OF TEXAS

JACOBS/BURNS & MCDONNELL, A JOINT VENTURE
155 NORTH LAKE AVENUE
PASADENA, CA 91101 USA
TEL 1 (817) 735-6000
FAX 1 (817) 735-6148

JOG NO. FDWD7911 A/E INFO

APPROVED
FOR COMMANDER NAVFAC 6/11/2015

ACTIVITY

SATISFACTORY TO DATE

DES	CPC	DRW	MTH	CHK	WRP

PMDM KAD
BRANCH MANAGER
CHIEF ENGARCH
FIRE PROTECTION JL

DEPARTMENT OF THE NAVY
NAVFAC PACIFIC
NAVAL FACILITIES ENGINEERING COMMAND
NAVAL FACILITIES ENGINEERING COMMAND ~ PACIFIC
JOINT BASE PEARL HARBOR - HICKAM
MARINE CORPS BASE HAWAII
KANEOHE, HAWAII
FY14 MCON PROJECT P-863
AIRCRAFT MAINTENANCE HANGAR UPGRADES
PARTIAL DEMOLITION PLAN - LEVEL 2 AREAS E & F

SCALE	AS SHOWN
EPROJECT NO.	862914
CONSTR. CONTR. NO.	
NAVFAC DRAWING NO.	19043339
SHEET	74 OF 313

A-015

5/12/2015 7:33:35 AM

FINAL DESIGN - 15 MAY 2015

SCALE(S) AS NOTED ON THIS SHEET ARE BASED ON FULL SIZE ANSI D (22" x 34") SHEET. DRAWFORM REVISION: 10 MARCH 2009

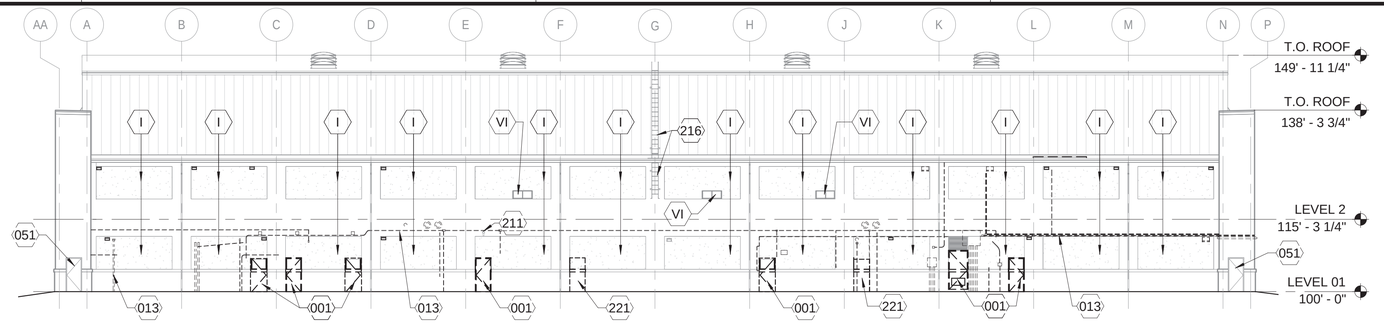

EXTERIOR DEMO ELEVATION - EAST (STREET SIDE)
1/16" = 1'-0"
A-010 1

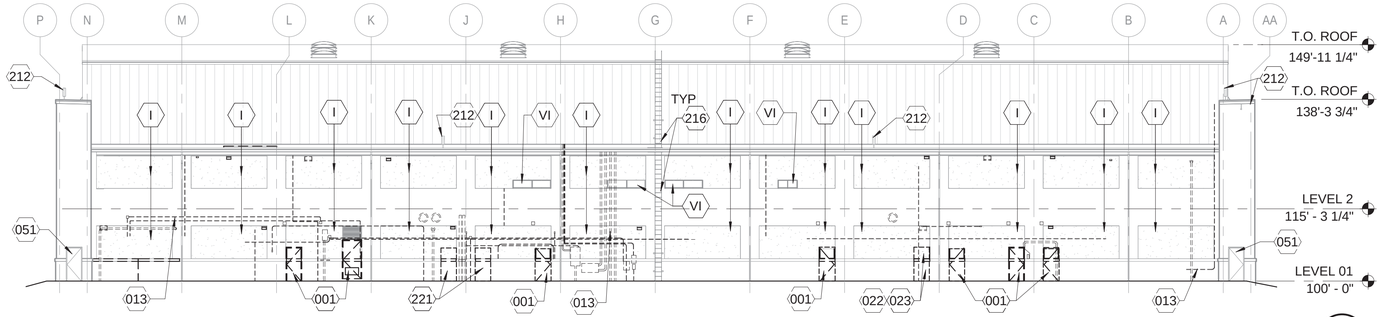

EXTERIOR DEMO ELEVATION - WEST (BAY SIDE)
1/16" = 1'-0"
A-010 2

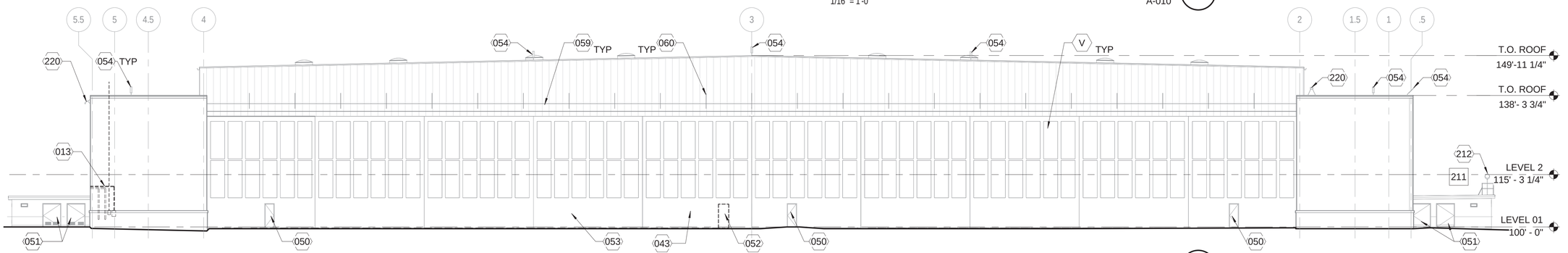

EXTERIOR DEMO ELEVATION - NORTH
1/16" = 1'-0"
A-010 3

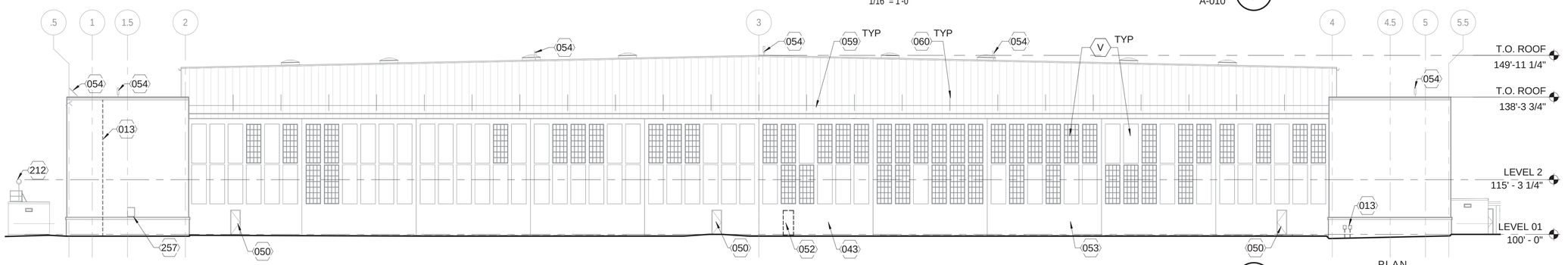

EXTERIOR DEMO ELEVATION - SOUTH
1/16" = 1'-0"
A-010 4

0 32
SCALE: 1/16" = 1'-0"

PLAN NORTH

KEYNOTES

001	REMOVE AND DISPOSE OF EXISTING DOOR, FRAME, AND HARDWARE. DO NOT DAMAGE EXISTING STEEL SASH WINDOW SYSTEM EMBEDDED IN EXISTING WALLS WHERE APPLICABLE.
013	REMOVE AND DISPOSE OF ALL UNUSED/ABANDONED CONDUIT, PIPING, AND FIXTURES ALONG EXTERIOR WALL
022	SAW CUT AND REMOVE PORTION OF CONCRETE WALL FOR NEW DOOR
023	REMOVE PORTION OF EXISTING PLASTER WALL AND STEEL WINDOW FOR NEW DOOR, PROTECT REMAINING STEEL SASH WINDOW SYSTEM EMBEDDED IN WALL
043	HANGAR DOOR LEAF TO BE LOCKED IN PLACE
050	EXISTING HISTORIC HANGAR MAN DOOR TO REMAIN, CLEAN AND PREPARE FOR NEW PAINT.
051	EXISTING HISTORIC STEEL DOOR TO REMAIN, CLEAN AND PREPARE FOR NEW PAINT.
052	REMOVE PORTION OF HANGAR DOOR FOR DOOR INSTALLATION
053	EXISTING HISTORIC HANGAR DOORS TO REMAIN, CLEAN AND PREPARE FOR NEW PAINT, TYPICAL.
054	AREA OF EXISTING ROOFING SYSTEM TO BE REMOVED AND REPLACED WITH ROOFING SYSTEM TO MATCH EXISTING
059	EXISTING HANGAR DOOR CANOPY TO REMAIN
060	EXISTING TENSION RODS TO REMAIN
211	LIGHT FIXTURE; REFER ELECTRICAL
212	EXISTING SPOT LIGHT TO REMAIN
216	EXISTING ACCESS LADDER TO REMAIN
220	EXISTING CAMERA TO REMAIN
221	REMOVE PORTION OF WALL AND WINDOW FOR NEW EXTERIOR DOOR; REFER ARCHITECTURAL FLOOR PLANS
257	HISTORIC MARKER TO REMAIN

KEYNOTES - HISTORIC WINDOWS

I	LOCATION OF HISTORIC STEEL SASH WINDOW SYSTEM EMBEDDED IN EXISTING WALL TO REMAIN, PROTECT DURING CONSTRUCTION
V	EXISTING COVERED AND EXPOSED STEEL SASH WINDOW SYSTEM IN HANGAR DOORS TO REMAIN, PREPARE FOR PAINT AND PROTECT DURING CONSTRUCTION
VI	EXISTING WINDOWS TO REMAIN, AND AT EXTERIOR CONDITIONS WINDOWS TO BE FIXED IN PLACE AND CAULKED. PROTECT DURING CONSTRUCTION.

APPR | DATE | DESCRIPTION | SYM

NAVFAC

REGISTERED ARCHITECT MATTHEW THOMAS HOLLOWAY 22853 STATE OF TEXAS 05.15.2015

JACOBS/ Burns & McDonnell

JACOBS/BURNS & MCDONNELL, A JOINT VENTURE
155 NORTH LAKE AVENUE
PASADENA, CA 91101 USA
TEL 1 (817) 735-6000
FAX 1 (817) 735-6148

JEG NO. FDWD7911 | A/E INFO

APPROVED
FOR COMMANDER NAVFAC 6/11/2015

ACTIVITY

SATISFACTORY TO DATE

DES	CPC	DRW	MTH	CHK	WRP

PMDM
BRANCH MANAGER
CHIEF ENGARCH
FIRE PROTECTION

DEPARTMENT OF THE NAVY
NAVAL FACILITIES ENGINEERING COMMAND
NAVFAC PACIFIC
NAVAL FACILITIES ENGINEERING COMMAND ~ PACIFIC
JOINT BASE PEARL HARBOR - HICKAM
MARINE CORPS BASE HAWAII
KANEOHE, HAWAII
FY14 MCON PROJECT P-863
AIRCRAFT MAINTENANCE HANGAR UPGRADES
EXTERIOR DEMOLITION ELEVATIONS

SCALE	AS SHOWN
EPROJECT NO.	862914
CONSTR. CONTR. NO.	
NAVFAC DRAWING NO.	19043340
SHEET	75 OF 313

A-020

FINAL DESIGN - 15 MAY 2015

5/12/2015 7:34:13 AM

SCALE(S) AS NOTED ON THIS SHEET ARE BASED ON FULL SIZE ANSI D (22" x 34") SHEET. DRAWFORM REVISION: 10 MARCH 2009

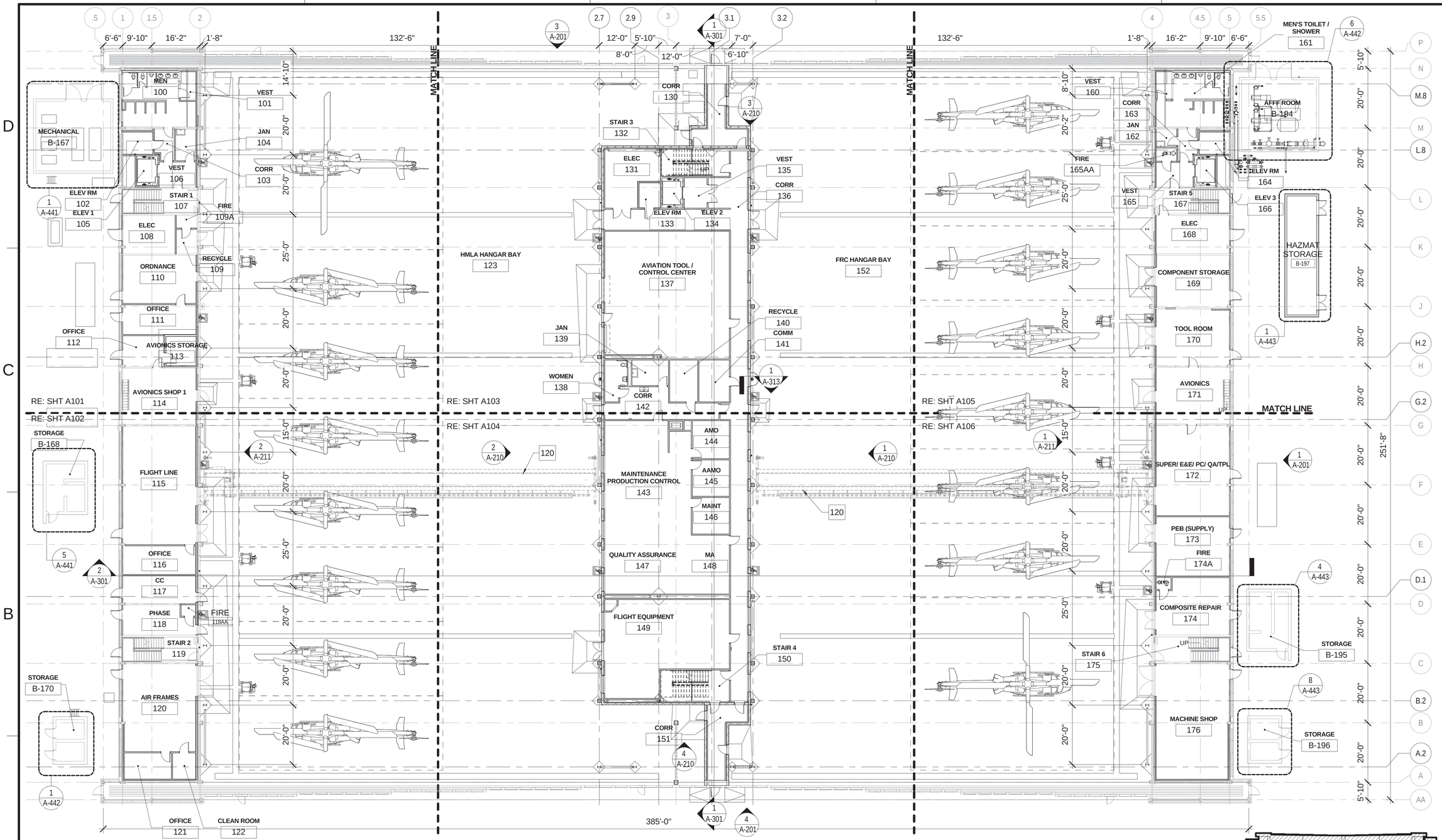

OVERALL PLAN - LEVEL 1

1/16" = 1'-0"

KEYNOTES

120	7 1/2 TON TOP RUNNING OVERHEAD BRIDGE CRANE, ABOVE

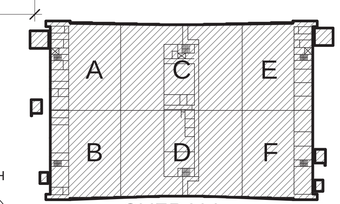

OVERALL KEY PLAN

PLAN NORTH

0 32

SCALE: 1/16" = 1'-0"

NAVFAC

REGISTERED ARCHITECT
ANTHEW THOMAS
05.15.2015
22853
STATE OF TEXAS

JACOBS/ BURNS & MCDONNELL

JACOBS/BURNS & MCDONNELL, A JOINT VENTURE
155 NORTH LAKE AVENUE
PASADENA, CA 91101 USA
TEL 1 (817) 735-6000
FAX 1 (817) 735-6148

JEG NO. FDWD7911 A/E INFO

APPROVED

FOR COMMANDER NAVFAC 6/11/2015

ACTIVITY

SATISFACTORY TO DATE

DES	CPC	DRW	MTH	CHK	WRP

PM/DM

BRANCH MANAGER

CHIEF ENG/ARCH

FIRE PROTECTION

DEPARTMENT OF THE NAVY
NAVAL FACILITIES ENGINEERING COMMAND
NAVFAC PACIFIC
NAVAL FACILITIES ENGINEERING COMMAND ~ PACIFIC
JOINT BASE PEARL HARBOR - HICKAM
MARINE CORPS BASE HAWAII
KANEOHE, HAWAII

FY14 MCON PROJECT P-863
AIRCRAFT MAINTENANCE HANGAR UPGRADES

OVERALL FLOOR PLAN - LEVEL 1

SCALE AS SHOWN

EPROJECT NO. 862914

CONSTR. CONTR. NO.

NAVFAC DRAWING NO. 19043341

SHEET 76 OF 313

A-100

SCALE(S) AS NOTED ON THIS SHEET ARE BASED ON FULL SIZE ANSI D (22' x 34') SHEET. DRAWFORM REVISION: 10 MARCH 2009

5/12/2015 7:34:33 AM

GENERAL NOTES - PARTIAL PLANS

A	REFER TO A-141 FOR HANGAR FLOOR MARKINGS PLAN.
B	REFER TO A-601 FOR PARTITION TYPES.
C	REFER TO A-611 FOR DOOR AND FRAME SCHEDULE.
D	REFER TO I-101 THROUGH I-109 FOR FINISH PLANS. REFER TO I-601 FOR FINISH SCHEDULE.
E	REFER TO A-641 FOR WINDOW AND LOUVER TYPES.
F	EXISTING WALLS AT BAY AND STREET SIDE HANGAR WALLS ARE 1-HOUR RATED WALLS

KEYNOTES

016	EXISTING DOOR TO BE NON-OPERABLE AND REMAIN IN CLOSED POSITION
042	MOVEABLE EXISTING HANGAR DOOR LEAF
102	ROTARY WING AIRCRAFT OUTLINE; FOR REFERENCE ONLY (TYP)
103	BRACKET MOUNTED 10 LB ABC FIRE EXTINGUISHER
106	HANGAR DOOR RAILS
109	STRUCTURAL CROSS BRACING; REFER STRUCTURAL FRAMING PLANS (TYP)
112	SHOWER/EYEWASH FIXTURE IN HANGAR BAYS (TYP); EYEWASH FIXTURE IN SHOPS (TYP); REFER: 7/A-501 FOR STRIPING; REFER PLUMBING
117	PLUMBING FIXTURE; REFER PLUMBING
118	MECHANICAL EQUIPMENT; REFER MECHANICAL
130	ELECTRICAL EQUIPMENT; REFER ELECTRICAL
131	STEEL COLUMN FOR BRIDGE CRANE, REFER: STRUCTURAL
142	CAST-IN-PLACE LANDING AND 1:12 SLOPE RAMP AS SHOWN; REFER: 2/A-101 AND STRUCTURAL
162	UTILITY PEDESTAL; REFER ELECTRICAL
164	LINE OF EXISTING MEZZANINE ABOVE
167	FRAME NEW WALL AROUND EXISTING HISTORIC WINDOW TO REMAIN EXPOSED
262	WASH CURTAIN AND TRACK FOR WASH BAY SUSPENDED FROM EXISTING STRUCTURE, REFER TO 11/A-511

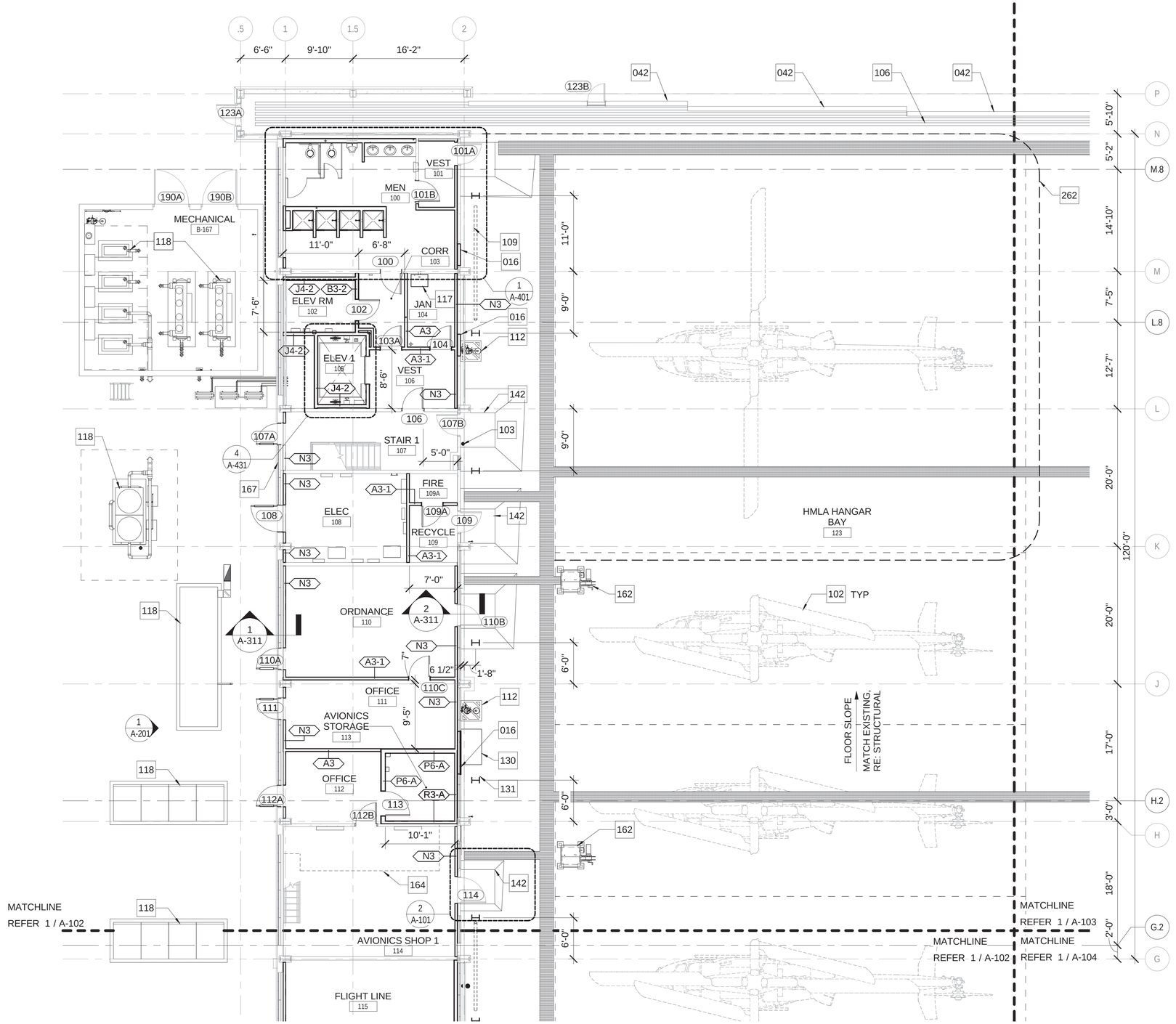

LEVEL 1 - PARTIAL FLOOR PLAN - AREA A
1/8" = 1'-0"
A-100 (1)

0 16
SCALE: 1/8" = 1'-0"

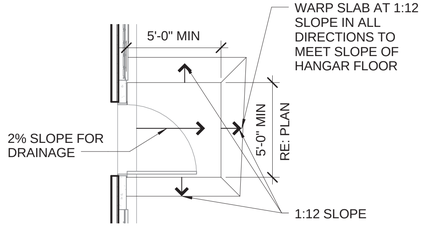

PLAN DETAIL - RAMP AT DOORS IN HANGAR (2)
1/4" = 1'-0"

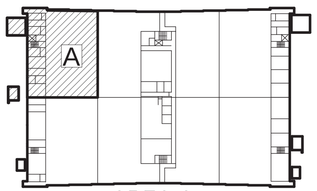

PLAN NORTH

AREA A
KEY PLAN

JACOBS/BURNS & MCDONNELL, A JOINT VENTURE
155 NORTH LAKE AVENUE
PASADENA, CA 91101 USA
TEL 1 (817) 735-6000
FAX 1 (817) 735-6148

JEG NO. FGWD7911 A/E INFO

APPROVED
FOR COMMANDER NAVFAC 6/11/2015

ACTIVITY

SATISFACTORY TO DATE

DES	CPC	DRW	MTH	CHK	WRP
PMDM					
BRANCH MANAGER					
CHIEF ENGARCH					
FIRE PROTECTION					

DEPARTMENT OF THE NAVY
NAVFAC PACIFIC
NAVAL FACILITIES ENGINEERING COMMAND
NAVAL FACILITIES ENGINEERING COMMAND – PACIFIC
JOINT BASE PEARL HARBOR - HICKAM
MARINE CORPS BASE HAWAII
KANEOHE, HAWAII
FY14 MCON PROJECT P-863
AIRCRAFT MAINTENANCE HANGAR UPGRADES
PARTIAL FLOOR PLAN - LEVEL 1 - AREA A

SCALE	AS SHOWN
EPROJECT NO.	862914
CONSTR. CONTR. NO.	
NAVFAC DRAWING NO.	19043342
SHEET	77 OF 313

A-101

APPR | DATE | DESCRIPTION | SYM

5/12/2015 7:34:44 AM

SCALE(S) AS NOTED ON THIS SHEET ARE BASED ON FULL SIZE ANSI D (22" x 34") SHEET. DRAWFORM REVISION: 10 MARCH 2009

FINAL DESIGN - 15 MAY 2015

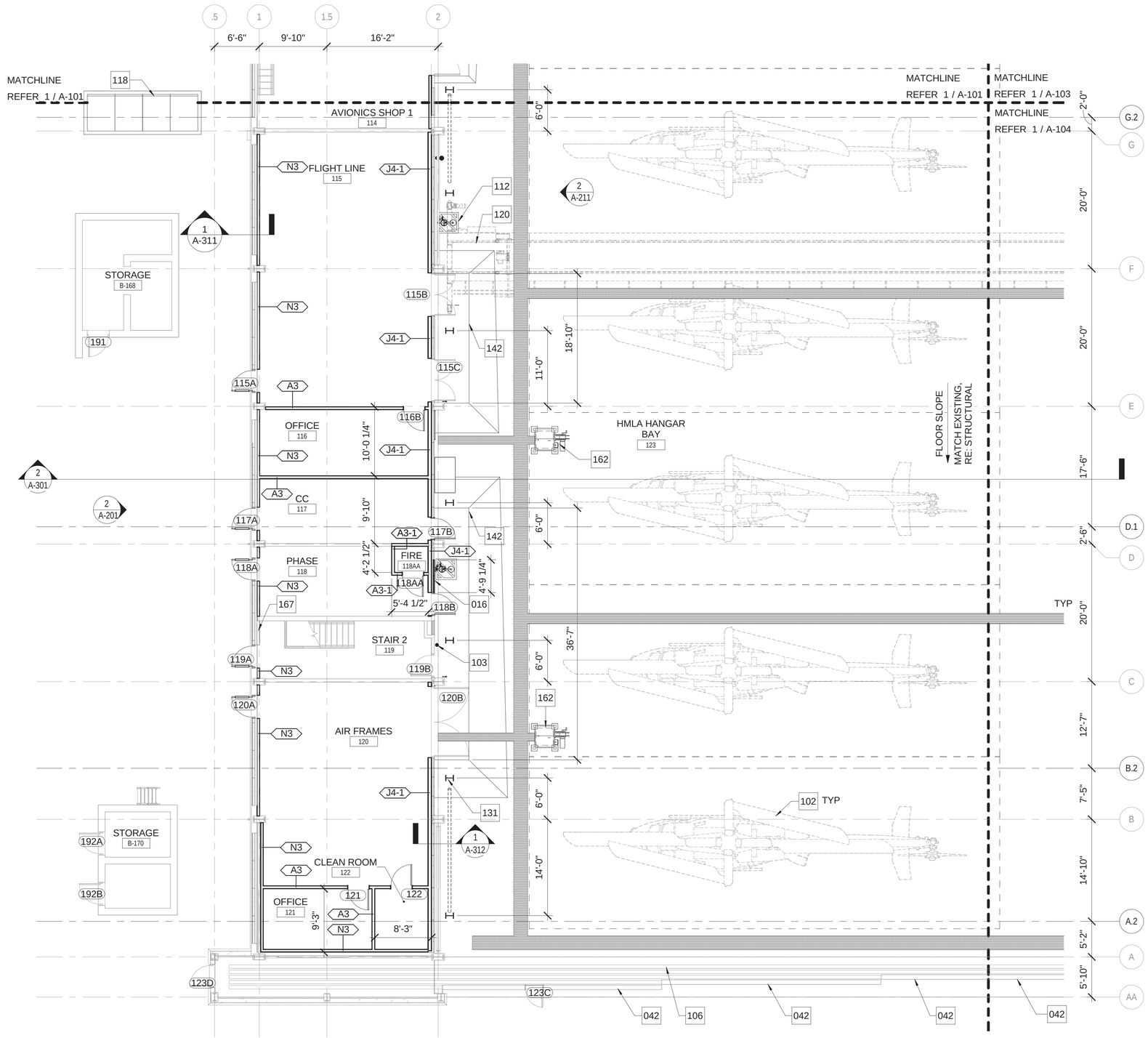

LEVEL 1 - PARTIAL FLOOR PLAN - AREA B

1/8" = 1'-0"

A-100 1

0 16

SCALE: 1/8" = 1'-0"

PLAN NORTH

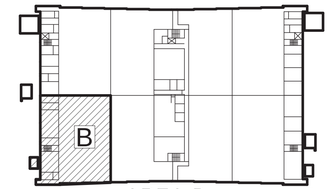

AREA B

KEY PLAN

GENERAL NOTES - PARTIAL PLANS

A	REFER TO A-141 FOR HANGAR FLOOR MARKINGS PLAN.
B	REFER TO A-601 FOR PARTITION TYPES.
C	REFER TO A-611 FOR DOOR AND FRAME SCHEDULE.
D	REFER TO I-101 THROUGH I-109 FOR FINISH PLANS. REFER TO I-601 FOR FINISH SCHEDULE.
E	REFER TO A-641 FOR WINDOW AND LOUVER TYPES.
F	EXISTING WALLS AT BAY AND STREET SIDE HANGAR WALLS ARE 1-HOUR RATED WALLS

KEYNOTES

016	EXISTING DOOR TO BE NON-OPERABLE AND REMAIN IN CLOSED POSITION
042	MOVEABLE EXISTING HANGAR DOOR LEAF
102	ROTARY WING AIRCRAFT OUTLINE; FOR REFERENCE ONLY (TYP)
103	BRACKET MOUNTED 10 LB ABC FIRE EXTINGUISHER
106	HANGAR DOOR RAILS
112	SHOWER/EYEWASH FIXTURE IN HANGAR BAYS (TYP); EYEWASH FIXTURE IN SHOPS (TYP); REFER: 7/A-501 FOR STRIPING; REFER PLUMBING
116	TRENCH DRAIN, REFER STRUCTURAL, FIRE PROTECTION, AND PLUMBING (TYP)
118	MECHANICAL EQUIPMENT; REFER MECHANICAL
120	7 1/2 TON TOP RUNNING OVERHEAD BRIDGE CRANE, ABOVE
131	STEEL COLUMN FOR BRIDGE CRANE, REFER: STRUCTURAL
133	CASEWORK, REFER INTERIORS
142	CAST-IN-PLACE LANDING AND 1:12 SLOPE RAMP AS SHOWN; REFER: 2/A-101 AND STRUCTURAL
162	UTILITY PEDESTAL; REFER ELECTRICAL
167	FRAME NEW WALL AROUND EXISTING HISTORIC WINDOW TO REMAIN EXPOSED

SYM	DESCRIPTION	DATE	APPR

NAVFAC

REGISTERED ARCHITECT
MATTHEW THOMAS PERRY
05-15-2015
22853
STATE OF TEXAS

JACOBS/BURNS & MCDONNELL

JACOBS/BURNS & MCDONNELL, A JOINT VENTURE
155 NORTH LAKE AVENUE
PASADENA, CA 91101 USA
TEL 1 (817) 735-6000
FAX 1 (817) 735-6148

JEG NO. FDWD7911 A/E INFO

APPROVED
FOR COMMANDER NAVFAC 6/11/2015

ACTIVITY

SATISFACTORY TO DATE

DES	CPC	DRW	MTH	CHK	WRP

PMDM

BRANCH MANAGER

CHIEF ENGARCH

FIRE PROTECTION

DEPARTMENT OF THE NAVY
NAVFAC PACIFIC
NAVAL FACILITIES ENGINEERING COMMAND ~ PACIFIC
NAVAL FACILITIES ENGINEERING COMMAND
JOINT BASE PEARL HARBOR - HICKAM
MARINE CORPS BASE HAWAII
KANEOHE, HAWAII
FY14 MCON PROJECT P-863
AIRCRAFT MAINTENANCE HANGAR UPGRADES
PARTIAL FLOOR PLAN - LEVEL 1 - AREA B

SCALE	AS SHOWN
EPROJECT NO.	862914
CONSTR. CONTR. NO.	
NAVFAC DRAWING NO.	19043343
SHEET	78 OF 313

A-102

5/12/2015 7:34:51 AM

SCALE(S) AS NOTED ON THIS SHEET ARE BASED ON FULL SIZE ANSI D (22" x 34") SHEET. DRAWFORM REVISION: 10 MARCH 2009

FINAL DESIGN - 15 MAY 2015

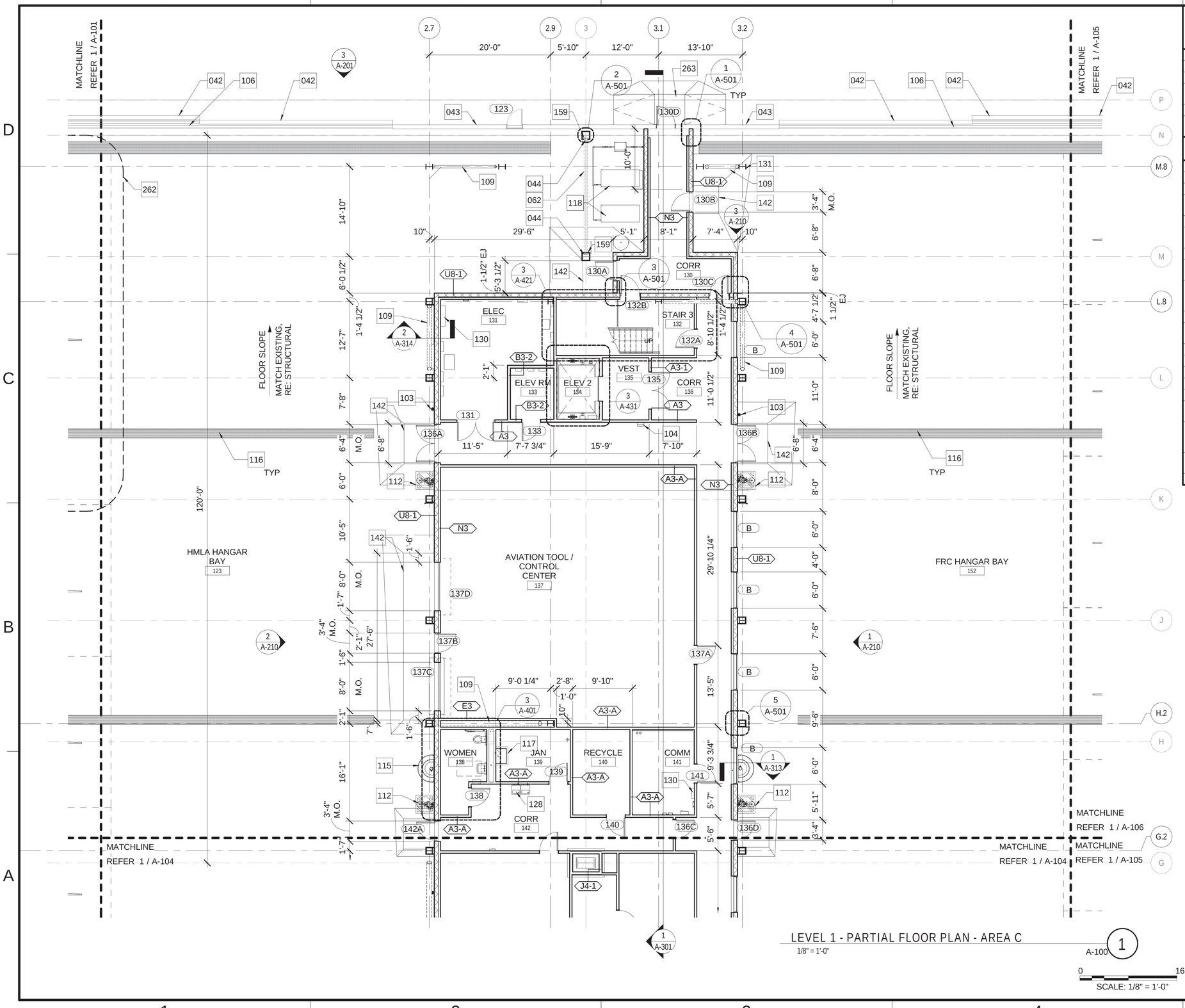

LEVEL 1 - PARTIAL FLOOR PLAN - AREA C

1/8" = 1'-0"

A-100 1

0 16

SCALE: 1/8" = 1'-0"

PLAN NORTH

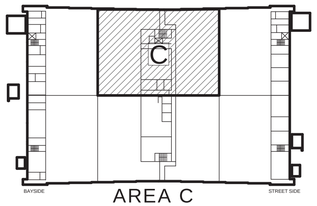

AREA C

KEY PLAN

GENERAL NOTES - PARTIAL PLANS

A	REFER TO A-141 FOR HANGAR FLOOR MARKINGS PLAN.
B	REFER TO A-601 FOR PARTITION TYPES.
C	REFER TO A-611 FOR DOOR AND FRAME SCHEDULE.
D	REFER TO I-101 THROUGH I-109 FOR FINISH PLANS. REFER TO I-601 FOR FINISH SCHEDULE.
E	REFER TO A-641 FOR WINDOW AND LOUVER TYPES.
F	EXISTING WALLS AT BAY AND STREET SIDE HANGAR WALLS ARE 1-HOUR RATED WALLS

KEYNOTES

042	MOVEABLE EXISTING HANGAR DOOR LEAF
043	HANGAR DOOR LEAF TO BE LOCKED IN PLACE
044	EXISTING HISTORIC COLUMN; PROTECT DURING CONSTRUCTION
062	EXISTING HISTORIC STEEL BRACING, PAINTED AS-IS; PROTECT DURING CONSTRUCTION
103	BRACKET MOUNTED 10 LB ABC FIRE EXTINGUISHER
104	SEMI-RECESSED FIRE EXTINGUISHER CABINET WITH 10 LB ABC FIRE EXTINGUISHER
106	HANGAR DOOR RAILS
109	STRUCTURAL CROSS BRACING; REFER STRUCTURAL FRAMING PLANS (TYP)
112	SHOWER/EYEWASH FIXTURE IN HANGAR BAYS (TYP); EYEWASH FIXTURE IN SHOPS (TYP); REFER: 7/A-501 FOR STRIPING; REFER PLUMBING
115	SHOP SINK; REFER PLUMBING
116	TRENCH DRAIN, REFER STRUCTURAL, FIRE PROTECTION, AND PLUMBING (TYP)
117	PLUMBING FIXTURE; REFER PLUMBING
118	MECHANICAL EQUIPMENT; REFER MECHANICAL
128	HIGH-LO ELECTRIC WATER COOLER, REFER PLUMBING
130	ELECTRICAL EQUIPMENT; REFER ELECTRICAL
131	STEEL COLUMN FOR BRIDGE CRANE, REFER: STRUCTURAL
142	CAST-IN-PLACE LANDING AND 1:12 SLOPE RAMP AS SHOWN; REFER: 2/A-101 AND STRUCTURAL
159	WRAP EXISTING COLUMN WITH A 1-HOUR RATED TROWEL APPLIED CEMENTITIOUS FIRE PROOFING AND METAL LATH UP TO UNDERSIDE OF TRUSS ABOVE. (UL DESIGN NO. X746)
262	WASH CURTAIN AND TRACK FOR WASH BAY SUSPENDED FROM EXISTING STRUCTURE, REFER TO 11/A-511
263	5'-0" X 5'-0" LANDING AND RAMP, REFER TO CIVIL

SYM	DESCRIPTION	DATE	APPR

NAVFAC

REGISTERED ARCHITECT THEW THOMAS 25.15.2015 22853 STATE OF TEXAS

SEAL

JACOBS/BURNS & MCDONNELL

JACOBS/BURNS & MCDONNELL, A JOINT VENTURE
155 NORTH LAKE AVENUE
PASADENA, CA 91101 USA
TEL 1 (817) 735-6000
FAX 1 (817) 735-6148

JEG NO. FDW07911 A/E INFO

APPROVED

FOR COMMANDER NAVFAC 6/11/2015

ACTIVITY

SATISFACTORY TO DATE

DES	CPC	DRW	MTH	CHK	WRP

PMDM KAD

BRANCH MANAGER

CHIEF ENGIARCH

FIRE PROTECTION

DEPARTMENT OF THE NAVY
NAVAL FACILITIES ENGINEERING COMMAND
NAVFAC PACIFIC
NAVAL FACILITIES ENGINEERING COMMAND ~ PACIFIC
JOINT BASE PEARL HARBOR - HICKAM
MARINE CORPS BASE HAWAII
KANEOHE, HAWAII

FY14 MCON PROJECT P-863
AIRCRAFT MAINTENANCE HANGAR UPGRADES

PARTIAL FLOOR PLAN - LEVEL 1 - AREA C

SCALE AS SHOWN

EPROJECT NO. 862914

CONSTR. CONTR. NO.

NAVFAC DRAWING NO. 19043344

SHEET 79 OF 313

A-103

FINAL DESIGN - 15 MAY 2015

SCALE(S) AS NOTED ON THIS SHEET ARE BASED ON FULL SIZE ANSI D (22" x 34") SHEET. DRAWFORM REVISION: 10 MARCH 2009

5/12/2015 7:34:59 AM

GENERAL NOTES - PARTIAL PLANS

A	REFER TO A-141 FOR HANGAR FLOOR MARKINGS PLAN.
B	REFER TO A-601 FOR PARTITION TYPES.
C	REFER TO A-611 FOR DOOR AND FRAME SCHEDULE.
D	REFER TO I-101 THROUGH I-109 FOR FINISH PLANS. REFER TO I-601 FOR FINISH SCHEDULE.
E	REFER TO A-641 FOR WINDOW AND LOUVER TYPES.
F	EXISTING WALLS AT BAY AND STREET SIDE HANGAR WALLS ARE 1-HOUR RATED WALLS

KEYNOTES

042	MOVEABLE EXISTING HANGAR DOOR LEAF
043	HANGAR DOOR LEAF TO BE LOCKED IN PLACE
044	EXISTING HISTORIC COLUMN; PROTECT DURING CONSTRUCTION
062	EXISTING HISTORIC STEEL BRACING, PAINTED AS-IS; PROTECT DURING CONSTRUCTION
103	BRACKET MOUNTED 10 LB ABC FIRE EXTINGUISHER
104	SEMI-RECESSED FIRE EXTINGUISHER CABINET WITH 10 LB ABC FIRE EXTINGUISHER
106	HANGAR DOOR RAILS
109	STRUCTURAL CROSS BRACING; REFER STRUCTURAL FRAMING PLANS (TYP)
112	SHOWER/EYEWASH FIXTURE IN HANGAR BAYS (TYP); EYEWASH FIXTURE IN SHOPS (TYP); REFER: 7/A-501 FOR STRIPING; REFER PLUMBING
115	SHOP SINK; REFER PLUMBING
116	TRENCH DRAIN, REFER STRUCTURAL, FIRE PROTECTION, AND PLUMBING (TYP)
120	7 1/2 TON TOP RUNNING OVERHEAD BRIDGE CRANE, ABOVE
128	HIGH-LO ELECTRIC WATER COOLER, REFER PLUMBING
130	ELECTRICAL EQUIPMENT; REFER ELECTRICAL
131	STEEL COLUMN FOR BRIDGE CRANE, REFER: STRUCTURAL
142	CAST-IN-PLACE LANDING AND 1:12 SLOPE RAMP AS SHOWN; REFER: 2/A-101 AND STRUCTURAL
154	1-HR RATED STEEL FRAMED WINDOWS AS SCHEDULED, TYP.
159	WRAP EXISTING COLUMN WITH A 1-HOUR RATED TROWEL APPLIED CEMENTITIOUS FIRE PROOFING AND METAL LATH UP TO UNDERSIDE OF TRUSS ABOVE. (UL DESIGN NO. X746)
177	WALK-OFF MAT, REFER INTERIORS
194	WRAP STEEL COLUMN UP TO UNDERSIDE OF STRUCTURE OR BOTTOM OF TRUSS WITH A 1-HOUR RATED TROWEL APPLIED CEMENTITIOUS FIRE PROOFING AND METAL LATH PARTITION. (UL DESIGN NO. X746)
263	5'-0" X 5'-0" LANDING AND RAMP, REFER TO CIVIL

LEVEL 1 - PARTIAL FLOOR PLAN - AREA D

1/8" = 1'-0"

A-100 (1)

0 16

SCALE: 1/8" = 1'-0"

PLAN NORTH

AREA D KEY PLAN

JACOBS/BURNS & MCDONNELL, A JOINT VENTURE
155 NORTH LAKE AVENUE
PASADENA, CA 91101 USA
TEL 1 (817) 735-6000
FAX 1 (817) 735-6148

JEG NO. FDWD7911 A/E INFO

APPROVED
FOR COMMANDER NAVFAC 6/11/2015

ACTIVITY

SATISFACTORY TO DATE

DES	CPC	DRW	MTH	CHK	WRP
PMOM					
BRANCH MANAGER					
CHIEF ENGARCH					
FIRE PROTECTION					

DEPARTMENT OF THE NAVY
NAVFAC PACIFIC
NAVAL FACILITIES ENGINEERING COMMAND
NAVAL FACILITIES ENGINEERING COMMAND – PACIFIC
JOINT BASE PEARL HARBOR – HICKAM
MARINE CORPS BASE HAWAII
KANEOHE, HAWAII
FY14 MCON PROJECT P-863
AIRCRAFT MAINTENANCE HANGAR UPGRADES
PARTIAL FLOOR PLAN - LEVEL 1 - AREA D

SCALE	AS SHOWN
EPROJECT NO.	862914
CONSTR. CONTR. NO.	
NAVFAC DRAWING NO.	19043345
SHEET	80 OF 313

A-104

FINAL DESIGN - 15 MAY 2015

5/12/2015 7:35:06 AM

SCALE(S) AS NOTED ON THIS SHEET ARE BASED ON FULL SIZE ANSI D (22" x 34") SHEET. DRAWFORM REVISION: 10 MARCH 2009

GENERAL NOTES - PARTIAL PLANS

A	REFER TO A-141 FOR HANGAR FLOOR MARKINGS PLAN.
B	REFER TO A-601 FOR PARTITION TYPES.
C	REFER TO A-611 FOR DOOR AND FRAME SCHEDULE.
D	REFER TO I-101 THROUGH I-109 FOR FINISH PLANS. REFER TO I-601 FOR FINISH SCHEDULE.
E	REFER TO A-641 FOR WINDOW AND LOUVER TYPES.
F	EXISTING WALLS AT BAY AND STREET SIDE HANGAR WALLS ARE 1-HOUR RATED WALLS

KEYNOTES

042	MOVEABLE EXISTING HANGAR DOOR LEAF
102	ROTARY WING AIRCRAFT OUTLINE; FOR REFERENCE ONLY (TYP)
103	BRACKET MOUNTED 10 LB ABC FIRE EXTINGUISHER
106	HANGAR DOOR RAILS
109	STRUCTURAL CROSS BRACING; REFER STRUCTURAL FRAMING PLANS (TYP)
112	SHOWER/EYEWASH FIXTURE IN HANGAR BAYS (TYP); EYEWASH FIXTURE IN SHOPS (TYP); REFER: 7/A-501 FOR STRIPING; REFER PLUMBING
116	TRENCH DRAIN, REFER STRUCTURAL, FIRE PROTECTION, AND PLUMBING (TYP)
117	PLUMBING FIXTURE; REFER PLUMBING
130	ELECTRICAL EQUIPMENT; REFER ELECTRICAL
131	STEEL COLUMN FOR BRIDGE CRANE, REFER: STRUCTURAL
142	CAST-IN-PLACE LANDING AND 1:12 SLOPE RAMP AS SHOWN; REFER: 2/A-101 AND STRUCTURAL
161	INFILL EXISTING OPENING TO MATCH ADJACENT WALLS
162	UTILITY PEDESTAL; REFER ELECTRICAL
164	LINE OF EXISTING MEZZANINE ABOVE
165	EXISTING STAIR TO REMAIN
167	FRAME NEW WALL AROUND EXISTING HISTORIC WINDOW TO REMAIN EXPOSED
198	FIRE PROTECTION EQUIPMENT, REFER FIRE PROTECTION

LEVEL 1 - PARTIAL FLOOR PLAN - AREA E

1/8" = 1'-0"

A-100 1

SCALE: 1/8" = 1'-0"

PLAN NORTH

AREA E KEY PLAN

JACOBS/BURNS & McDONNELL, A JOINT VENTURE
155 NORTH LAKE AVENUE
PASADENA, CA 91101 USA
TEL 1 (817) 735-6000
FAX 1 (817) 735-6148

JEG NO. FDWD7911 A/E INFO

APPROVED
FOR COMMANDER NAVFAC 6/11/2015

ACTIVITY

SATISFACTORY TO DATE

DES	CPC	DRW	MTH	CHK	WRP

PMDM
BRANCH MANAGER
CHIEF ENGARCH
FIRE PROTECTION

DEPARTMENT OF THE NAVY
NAVFAC PACIFIC
NAVAL FACILITIES ENGINEERING COMMAND – PACIFIC
JOINT BASE PEARL HARBOR - HICKAM
MARINE CORPS BASE HAWAII
KANEOHE, HAWAII
FY14 MCON PROJECT P-863
AIRCRAFT MAINTENANCE HANGAR UPGRADES
PARTIAL FLOOR PLAN - LEVEL 1 - AREA E

SCALE AS SHOWN
EPROJECT NO. 862914
CONSTR. CONTR. NO.
NAVFAC DRAWING NO. 19043346
SHEET 81 OF 313

A-105

SCALE(S) AS NOTED ON THIS SHEET ARE BASED ON FULL SIZE ANSI D (22" x 34") SHEET. DRAWFORM REVISION: 10 MARCH 2009

FINAL DESIGN - 15 MAY 2015

5/12/2015 7:35:18 AM

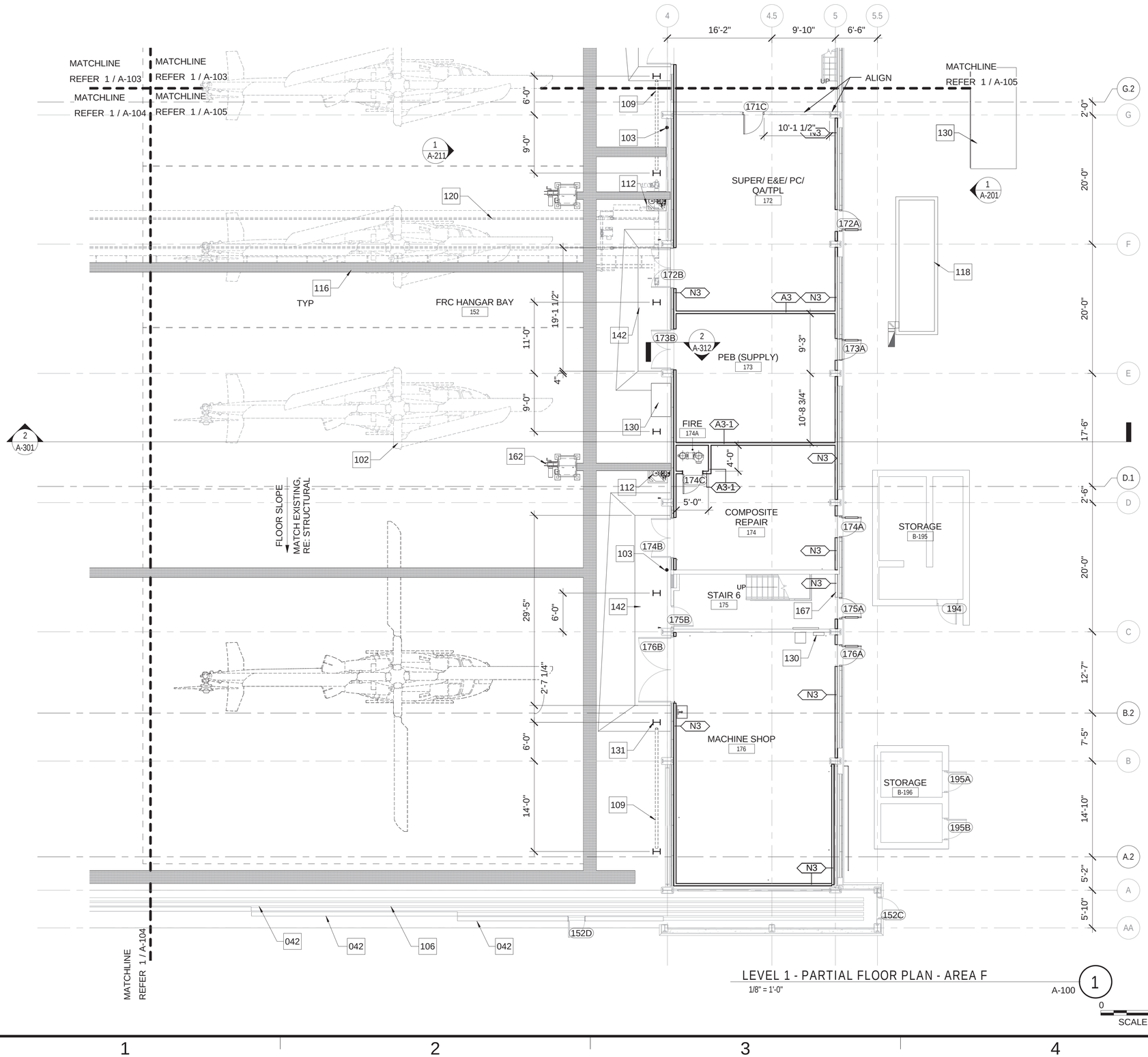

LEVEL 1 - PARTIAL FLOOR PLAN - AREA F

1/8" = 1'-0"

A-100 1

0 16

SCALE: 1/8" = 1'-0"

PLAN NORTH

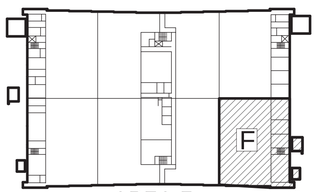

AREA F KEY PLAN

GENERAL NOTES - PARTIAL PLANS

A	REFER TO A-141 FOR HANGAR FLOOR MARKINGS PLAN.
B	REFER TO A-601 FOR PARTITION TYPES.
C	REFER TO A-611 FOR DOOR AND FRAME SCHEDULE.
D	REFER TO I-101 THROUGH I-109 FOR FINISH PLANS. REFER TO I-601 FOR FINISH SCHEDULE.
E	REFER TO A-641 FOR WINDOW AND LOUVER TYPES.
F	EXISTING WALLS AT BAY AND STREET SIDE HANGAR WALLS ARE 1-HOUR RATED WALLS

KEYNOTES

042	MOVEABLE EXISTING HANGAR DOOR LEAF
102	ROTARY WING AIRCRAFT OUTLINE; FOR REFERENCE ONLY (TYP)
103	BRACKET MOUNTED 10 LB ABC FIRE EXTINGUISHER
106	HANGAR DOOR RAILS
109	STRUCTURAL CROSS BRACING; REFER STRUCTURAL FRAMING PLANS (TYP)
112	SHOWER/EYEWASH FIXTURE IN HANGAR BAYS (TYP); EYEWASH FIXTURE IN SHOPS (TYP); REFER: 7/A-501 FOR STRIPING; REFER PLUMBING
116	TRENCH DRAIN, REFER STRUCTURAL, FIRE PROTECTION, AND PLUMBING (TYP)
118	MECHANICAL EQUIPMENT; REFER MECHANICAL
120	7 1/2 TON TOP RUNNING OVERHEAD BRIDGE CRANE, ABOVE
130	ELECTRICAL EQUIPMENT; REFER ELECTRICAL
131	STEEL COLUMN FOR BRIDGE CRANE, REFER: STRUCTURAL
142	CAST-IN-PLACE LANDING AND 1:12 SLOPE RAMP AS SHOWN; REFER: 2/A-101 AND STRUCTURAL
162	UTILITY PEDESTAL; REFER ELECTRICAL
167	FRAME NEW WALL AROUND EXISTING HISTORIC WINDOW TO REMAIN EXPOSED

APPR | DATE | DESCRIPTION | SYM

NAVFAC

REGISTERED ARCHITECT — ANDREW THOMAS — 5-15-2015 — 22853 — STATE OF TEXAS

JACOBS/ BURNS & MCDONNELL

JACOBS/BURNS & MCDONNELL, A JOINT VENTURE
155 NORTH LAKE AVENUE
PASADENA, CA 91101 USA
TEL 1 (817) 735-6000
FAX 1 (817) 735-6148

JEG NO. FDWD7911 | A/E INFO

APPROVED
FOR COMMANDER NAVFAC 6/11/2015

ACTIVITY

SATISFACTORY TO DATE

DES	CPC	DRW	MTH	CHK	WRP

PMDM
BRANCH MANAGER
CHIEF ENGARCH
FIRE PROTECTION

DEPARTMENT OF THE NAVY
NAVFAC PACIFIC
NAVAL FACILITIES ENGINEERING COMMAND ~ PACIFIC
JOINT BASE PEARL HARBOR - HICKAM
MARINE CORPS BASE HAWAII
KANEOHE, HAWAII
FY14 MCON PROJECT P-863
AIRCRAFT MAINTENANCE HANGAR UPGRADES
PARTIAL FLOOR PLAN - LEVEL 1 - AREA F

SCALE	AS SHOWN
EPROJECT NO.	862914
CONSTR. CONTR. NO.	
NAVFAC DRAWING NO.	19043347
SHEET	82 OF 313

A-106

5/12/2015 7:35:26 AM

SCALE(S) AS NOTED ON THIS SHEET ARE BASED ON FULL SIZE ANSI D (22" x 34") SHEET. DRAWFORM REVISION: 10 MARCH 2009

FINAL DESIGN - 15 MAY 2015

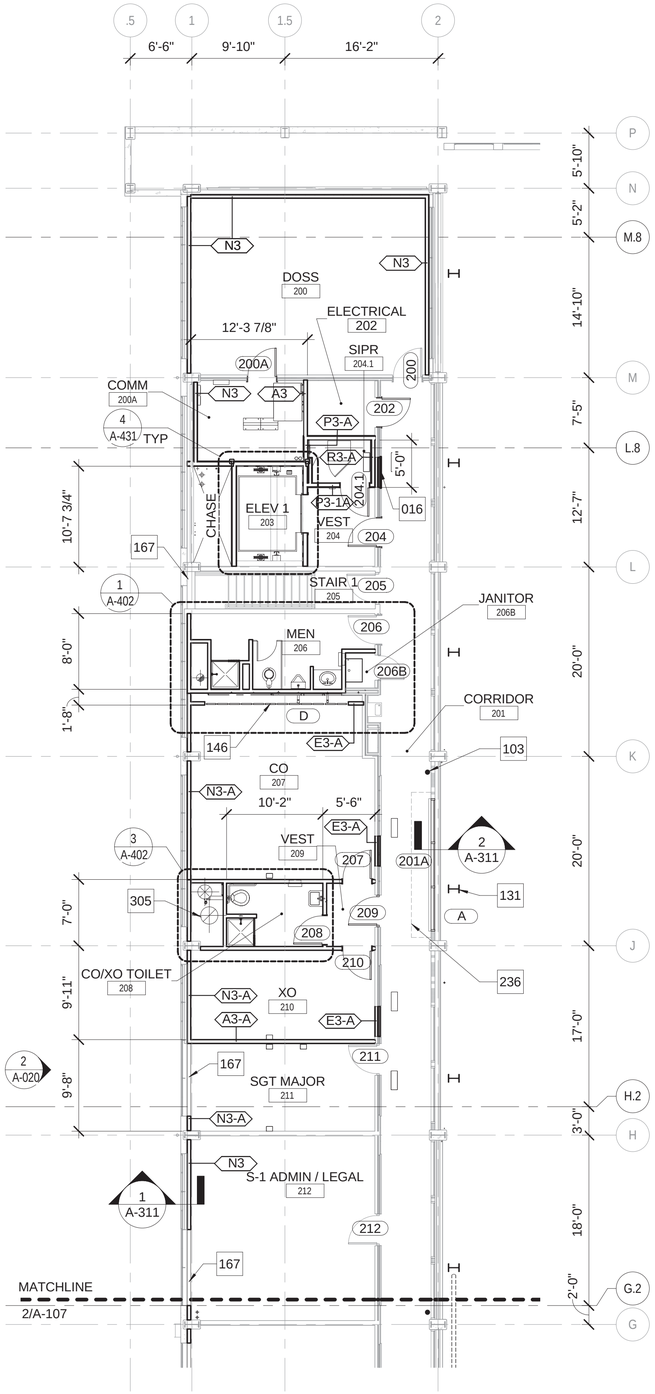

LEVEL 2 - PARTIAL FLOOR PLAN - AREA A

1/8" = 1'-0"

1

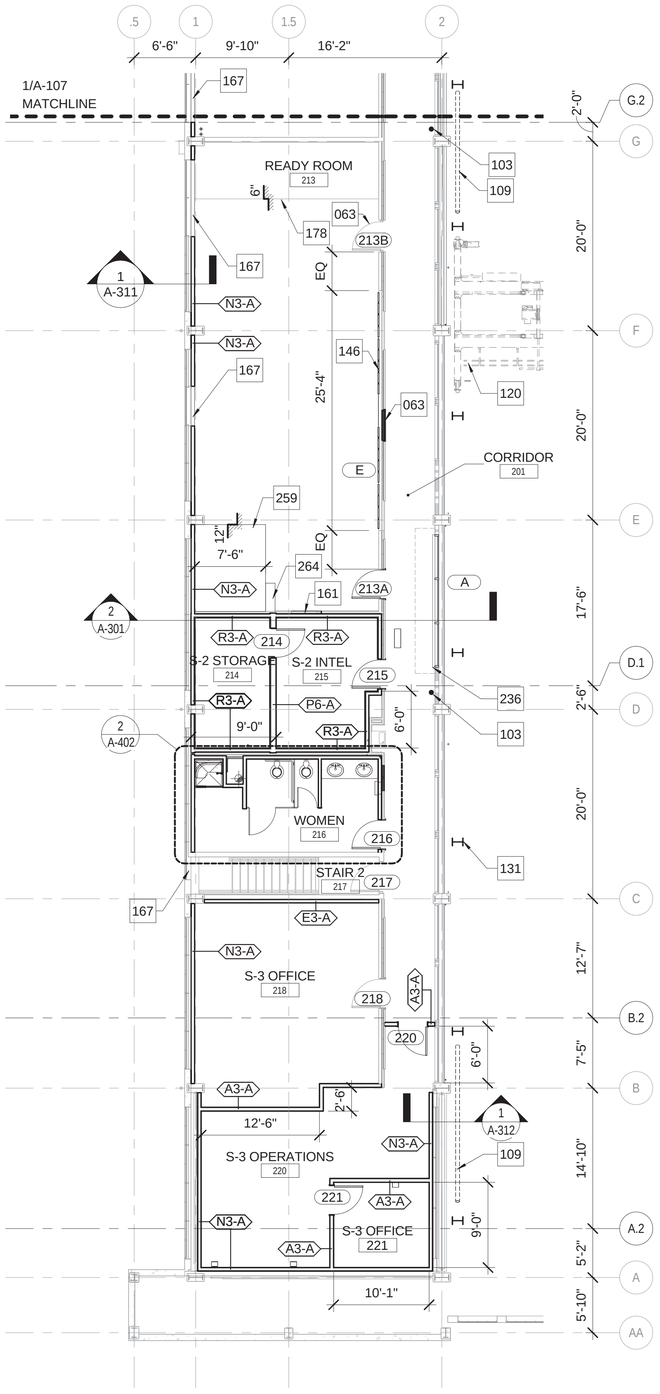

LEVEL 2 - PARTIAL FLOOR PLAN - AREA B

1/8" = 1'-0"

2

0 16

SCALE: 1/8" = 1'-0"

PLAN NORTH

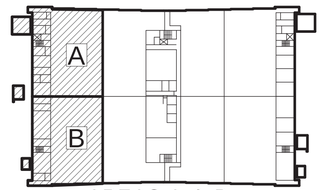

AREAS A & B

KEY PLAN

GENERAL NOTES - PARTIAL PLANS

A	REFER TO A-141 FOR HANGAR FLOOR MARKINGS PLAN.
B	REFER TO A-601 FOR PARTITION TYPES.
C	REFER TO A-611 FOR DOOR AND FRAME SCHEDULE.
D	REFER TO I-101 THROUGH I-109 FOR FINISH PLANS. REFER TO I-601 FOR FINISH SCHEDULE.
E	REFER TO A-641 FOR WINDOW AND LOUVER TYPES.
F	EXISTING WALLS AT BAY AND STREET SIDE HANGAR WALLS ARE 1-HOUR RATED WALLS

KEYNOTES

016	EXISTING DOOR TO BE NON-OPERABLE AND REMAIN IN CLOSED POSITION
063	EXISTING DOOR TO REMAIN AS-IS; PROTECT DURING CONSTRUCTION
103	BRACKET MOUNTED 10 LB ABC FIRE EXTINGUISHER
109	STRUCTURAL CROSS BRACING; REFER STRUCTURAL FRAMING PLANS (TYP)
120	7 1/2 TON TOP RUNNING OVERHEAD BRIDGE CRANE, ABOVE
131	STEEL COLUMN FOR BRIDGE CRANE, REFER: STRUCTURAL
146	RELOCATED RESTORED STEEL AND GLASS PARTITION, REFER: INTERIORS FOR FINISH INFORMATION
161	INFILL EXISTING OPENING TO MATCH ADJACENT WALLS
167	FRAME NEW WALL AROUND EXISTING HISTORIC WINDOW TO REMAIN EXPOSED
178	EXISTING PLATFORM TO REMAIN.
236	VERIFY EXISTING FUSIBLE LINK AT EXISTING FIRE RATED OVERHEAD COILING DOOR
259	1'-0" HIGH PLATFORM
264	6" HIGH STEP FOR RISER
305	MECHANICAL DUCTWORK; REFER MECHANICAL

APPR			
DATE			
DESCRIPTION			
SYM			

NAVFAC

REGISTERED ARCHITECT MATTHEW THORNBERRY 22853 STATE OF TEXAS 5.15.2015

JACOBS/BURNS & MCDONNELL

JACOBS/BURNS & MCDONNELL, A JOINT VENTURE
155 NORTH LAKE AVENUE
PASADENA, CA 91101 USA
TEL 1 (817) 735-6000
FAX 1 (817) 735-6148

JEG NO. FGWD7911 A/E INFO

APPROVED

FOR COMMANDER NAVFAC 6/11/2015

ACTIVITY

SATISFACTORY TO DATE

DES	CPC	DRW	MTH	CHK	WRP

PMDM KAP

BRANCH MANAGER

CHIEF ENGARCH

FIRE PROTECTION

DEPARTMENT OF THE NAVY
NAVFAC PACIFIC
NAVAL FACILITIES ENGINEERING COMMAND – PACIFIC
MARINE CORPS BASE HAWAII
JOINT BASE PEARL HARBOR - HICKAM
KANEOHE, HAWAII

FY14 MCON PROJECT P-863
AIRCRAFT MAINTENANCE HANGAR UPGRADES

PARTIAL FLOOR PLANS - LEVEL 2 - AREAS A & B

SCALE	AS SHOWN
EPROJECT NO.	862914
CONSTR. CONTR. NO.	
NAVFAC DRAWING NO.	19043348
SHEET	83 OF 313

A-107

FINAL DESIGN - 15 MAY 2015

5/12/2015 7:35:36 AM

SCALE(S) AS NOTED ON THIS SHEET ARE BASED ON FULL SIZE ANSI D (22" x 34") SHEET. DRAWFORM REVISION: 10 MARCH 2009

GENERAL NOTES - PARTIAL PLANS

A	REFER TO A-141 FOR HANGAR FLOOR MARKINGS PLAN.
B	REFER TO A-601 FOR PARTITION TYPES.
C	REFER TO A-611 FOR DOOR AND FRAME SCHEDULE.
D	REFER TO I-101 THROUGH I-109 FOR FINISH PLANS. REFER TO I-601 FOR FINISH SCHEDULE.
E	REFER TO A-641 FOR WINDOW AND LOUVER TYPES.
F	EXISTING WALLS AT BAY AND STREET SIDE HANGAR WALLS ARE 1-HOUR RATED WALLS

KEYNOTES

104	SEMI-RECESSED FIRE EXTINGUISHER CABINET WITH 10 LB ABC FIRE EXTINGUISHER
109	STRUCTURAL CROSS BRACING; REFER STRUCTURAL FRAMING PLANS (TYP)
119	MTL ACCESS LADDER AND ROOF HATCH ABOVE
120	7 1/2 TON TOP RUNNING OVERHEAD BRIDGE CRANE, ABOVE
130	ELECTRICAL EQUIPMENT; REFER ELECTRICAL
168	CONCRETE ROOF BELOW
169	EXISTING STRUCTURE; CLEAN AND PAINT EXPOSED PORTIONS
185	OPERABLE PARTITION, RE: 10/A-511
265	2" CMU SOAP AT PERIMETER

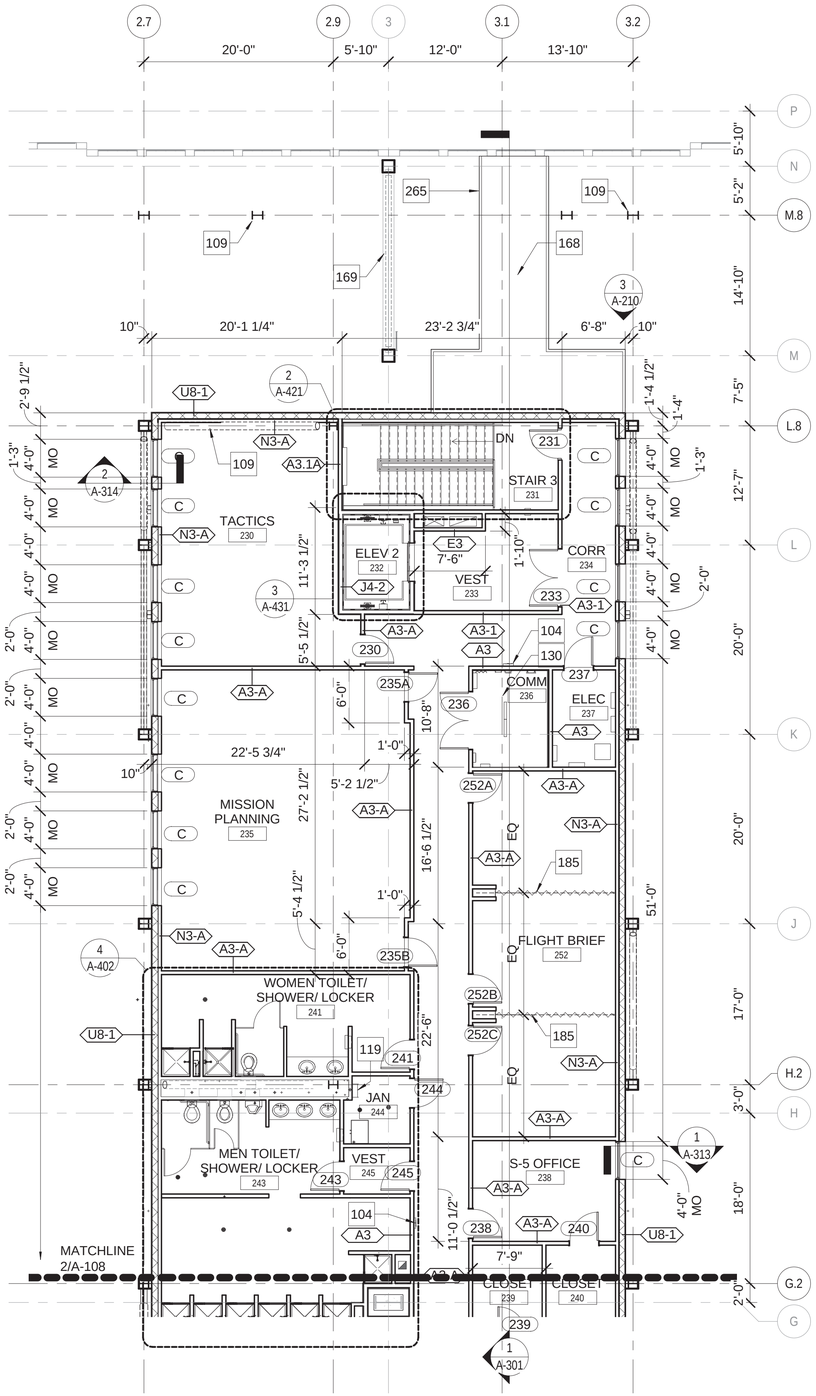

LEVEL 2 - PARTIAL FLOOR PLAN - AREA C

1/8" = 1'-0"

A-108 (1)

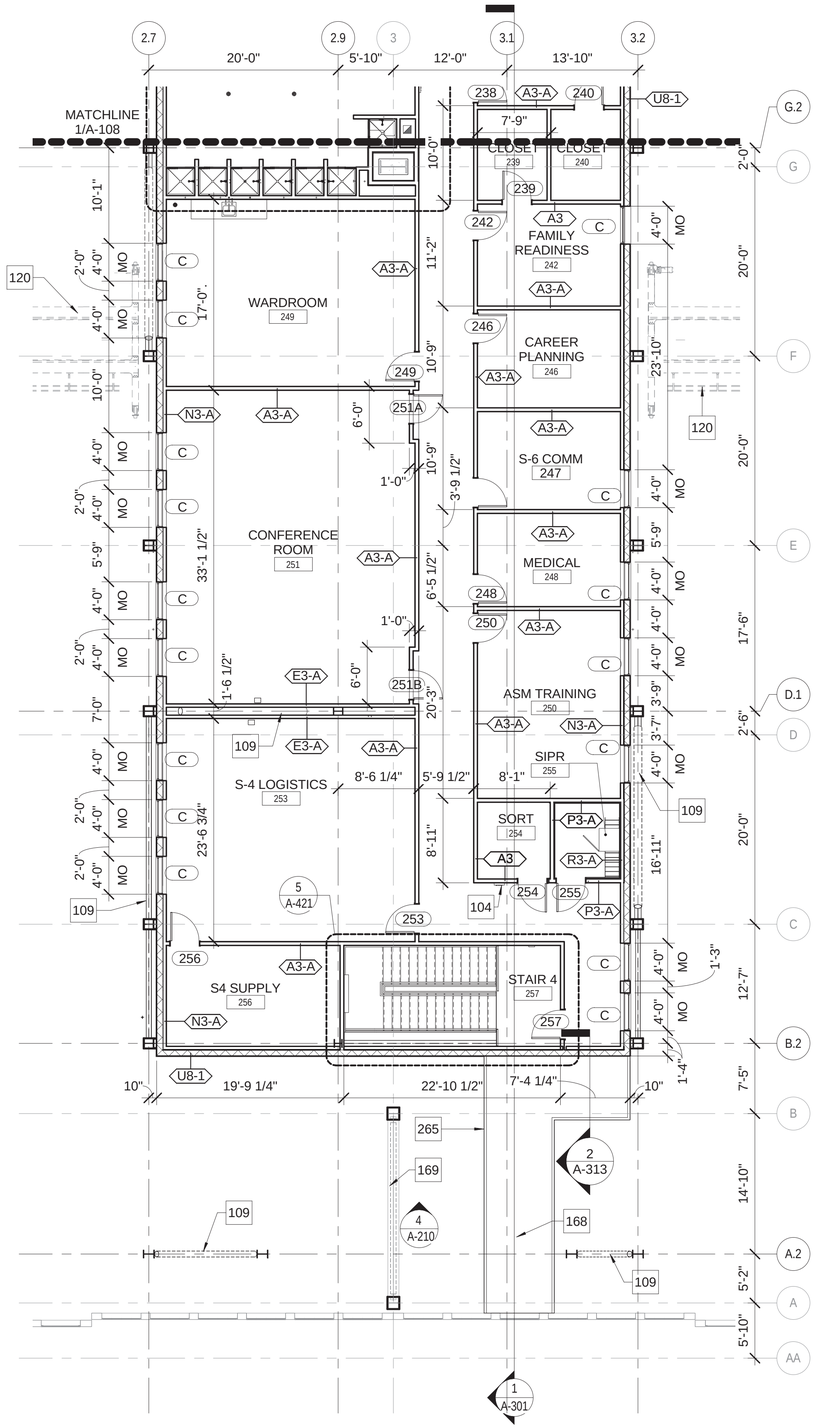

LEVEL 2 - PARTIAL FLOOR PLAN - AREA D

1/8" = 1'-0"

A-108 (2)

0 16

SCALE: 1/8" = 1'-0"

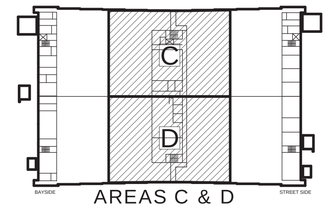

PLAN NORTH

AREAS C & D KEY PLAN

NAVFAC

REGISTERED ARCHITECT MATTHEW THOMAS ROSS 25-15-2015 22853 STATE OF TEXAS

JACOBS/ BURNS & MCDONNELL

JACOBS/BURNS & MCDONNELL, A JOINT VENTURE
155 NORTH LAKE AVENUE
PASADENA, CA 91101 USA
TEL 1 (817) 735-6000
FAX 1 (817) 735-6148

JEG NO. FDWD7911 A/E INFO

APPROVED
FOR COMMANDER NAVFAC 6/11/2015

ACTIVITY

SATISFACTORY TO DATE

DES	CPC	DRW	MTH	CHK	WRP
PMDM					KAD
BRANCH MANAGER					
CHIEF ENGARCH					
FIRE PROTECTION					

DEPARTMENT OF THE NAVY
NAVFAC PACIFIC
MARINE CORPS BASE HAWAII

NAVAL FACILITIES ENGINEERING COMMAND – PACIFIC
JOINT BASE PEARL HARBOR - HICKAM

KANEOHE, HAWAII

FY14 MCON PROJECT P-863
AIRCRAFT MAINTENANCE HANGAR UPGRADES

PARTIAL FLOOR PLANS - LEVEL 2 - AREAS C & D

SCALE	AS SHOWN
EPROJECT NO.	862914
CONSTR. CONTR. NO.	
NAVFAC DRAWING NO.	19043349
SHEET	84 OF 313

A-108

FINAL DESIGN - 15 MAY 2015

5/12/2015 7:35:46 AM

SCALE(S) AS NOTED ON THIS SHEET ARE BASED ON FULL SIZE ANSI D (22" x 34") SHEET. DRAWFORM REVISION: 10 MARCH 2009

GENERAL NOTES - PARTIAL PLANS

A	REFER TO A-141 FOR HANGAR FLOOR MARKINGS PLAN.
B	REFER TO A-601 FOR PARTITION TYPES.
C	REFER TO A-611 FOR DOOR AND FRAME SCHEDULE.
D	REFER TO I-101 THROUGH I-109 FOR FINISH PLANS. REFER TO I-601 FOR FINISH SCHEDULE.
E	REFER TO A-641 FOR WINDOW AND LOUVER TYPES.
F	EXISTING WALLS AT BAY AND STREET SIDE HANGAR WALLS ARE 1-HOUR RATED WALLS

KEYNOTES

016	EXISTING DOOR TO BE NON-OPERABLE AND REMAIN IN CLOSED POSITION
103	BRACKET MOUNTED 10 LB ABC FIRE EXTINGUISHER
104	SEMI-RECESSED FIRE EXTINGUISHER CABINET WITH 10 LB ABC FIRE EXTINGUISHER
109	STRUCTURAL CROSS BRACING; REFER STRUCTURAL FRAMING PLANS (TYP)
120	7 1/2 TON TOP RUNNING OVERHEAD BRIDGE CRANE, ABOVE
130	ELECTRICAL EQUIPMENT; REFER ELECTRICAL
131	STEEL COLUMN FOR BRIDGE CRANE, REFER: STRUCTURAL
133	CASEWORK, REFER INTERIORS
167	FRAME NEW WALL AROUND EXISTING HISTORIC WINDOW TO REMAIN EXPOSED
178	EXISTING PLATFORM TO REMAIN.
305	MECHANICAL DUCTWORK; REFER MECHANICAL

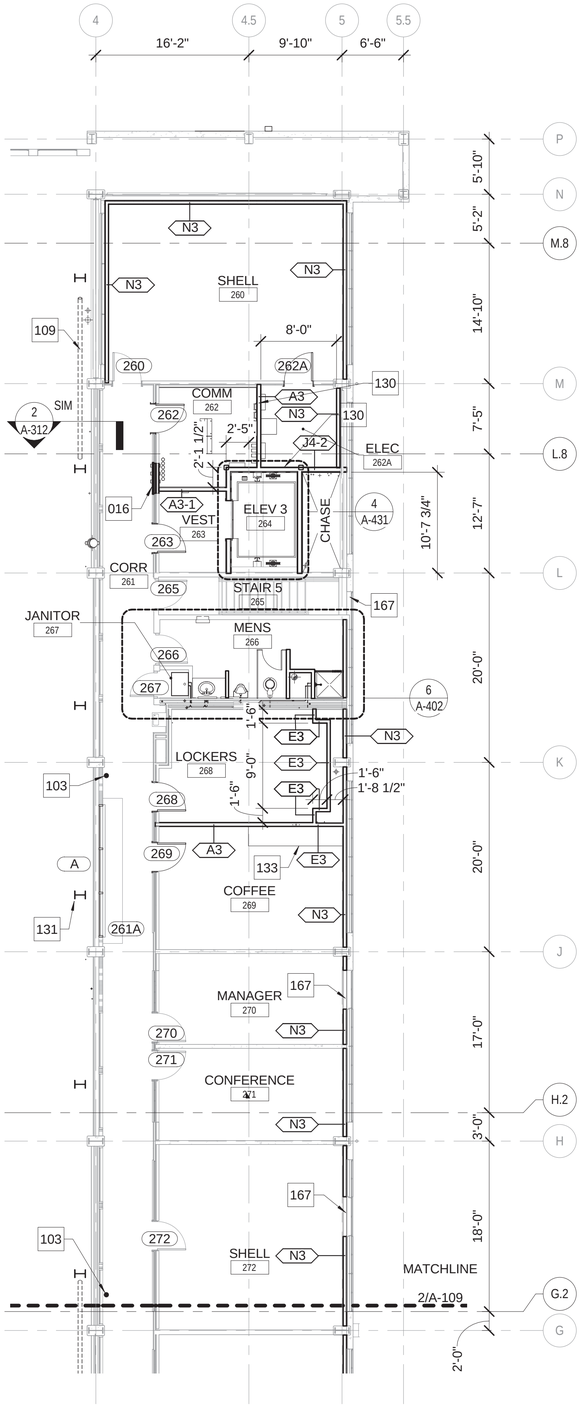

LEVEL 2 - PARTIAL FLOOR PLAN - AREA E

1/8" = 1'-0"

A-109 1

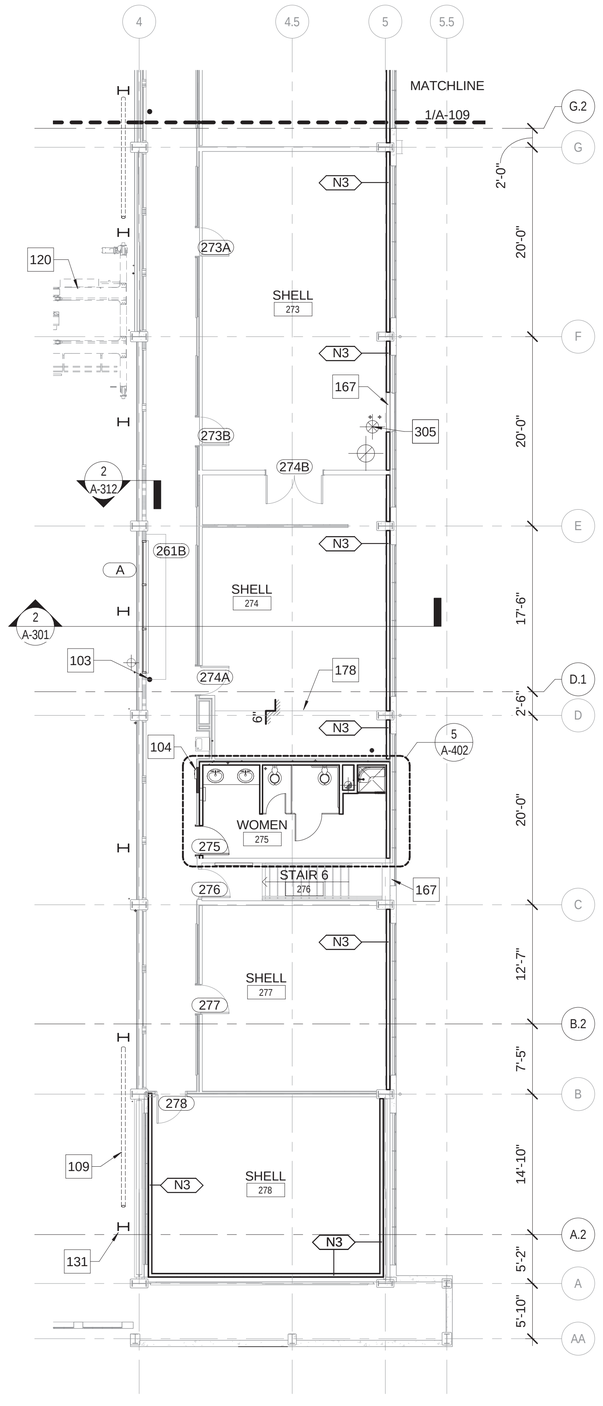

LEVEL 2 - PARTIAL FLOOR PLAN - AREA F

1/8" = 1'-0"

A-109 2

0 16

SCALE: 1/8" = 1'-0"

PLAN NORTH

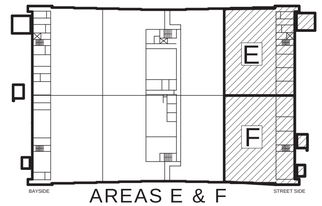

AREAS E & F KEY PLAN

				APPR	
				DATE	
				DESCRIPTION	
				SYM	

NAVFAC

REGISTERED ARCHITECT MELVIN THOMAS 22853 STATE OF TEXAS 05-15-2015

JACOBS/BURNS & McDONNELL

JACOBS/BURNS & MCDONNELL, A JOINT VENTURE
155 NORTH LAKE AVENUE
PASADENA, CA 91101 USA
TEL 1 (817) 735-6000
FAX 1 (817) 735-6148

JEG NO. FDWD7911 A/E INFO

APPROVED

FOR COMMANDER NAVFAC 6/11/2015

ACTIVITY

SATISFACTORY TO DATE

DES	CPC	DRW	MTH	CHK	WRP

PM/DM KAO

BRANCH MANAGER PM

CHIEF ENG/ARCH

FIRE PROTECTION

DEPARTMENT OF THE NAVY
NAVFAC PACIFIC
NAVAL FACILITIES ENGINEERING COMMAND – PACIFIC
NAVAL FACILITIES ENGINEERING COMMAND
MARINE CORPS BASE HAWAII
JOINT BASE PEARL HARBOR - HICKAM
KANEOHE, HAWAII
FY14 MCON PROJECT P-863
AIRCRAFT MAINTENANCE HANGAR UPGRADES
PARTIAL FLOOR PLANS - LEVEL 2 - AREAS E & F

SCALE	AS SHOWN
EPROJECT NO.	862914
CONSTR. CONTR. NO.	
NAVFAC DRAWING NO.	19043350
SHEET	85 OF 313

A-109

FINAL DESIGN - 15 MAY 2015

5/12/2015 7:35:56 AM

SCALE(S) AS NOTED ON THIS SHEET ARE BASED ON FULL SIZE ANSI D (22" x 34") SHEET. DRAWFORM REVISION: 10 MARCH 2009

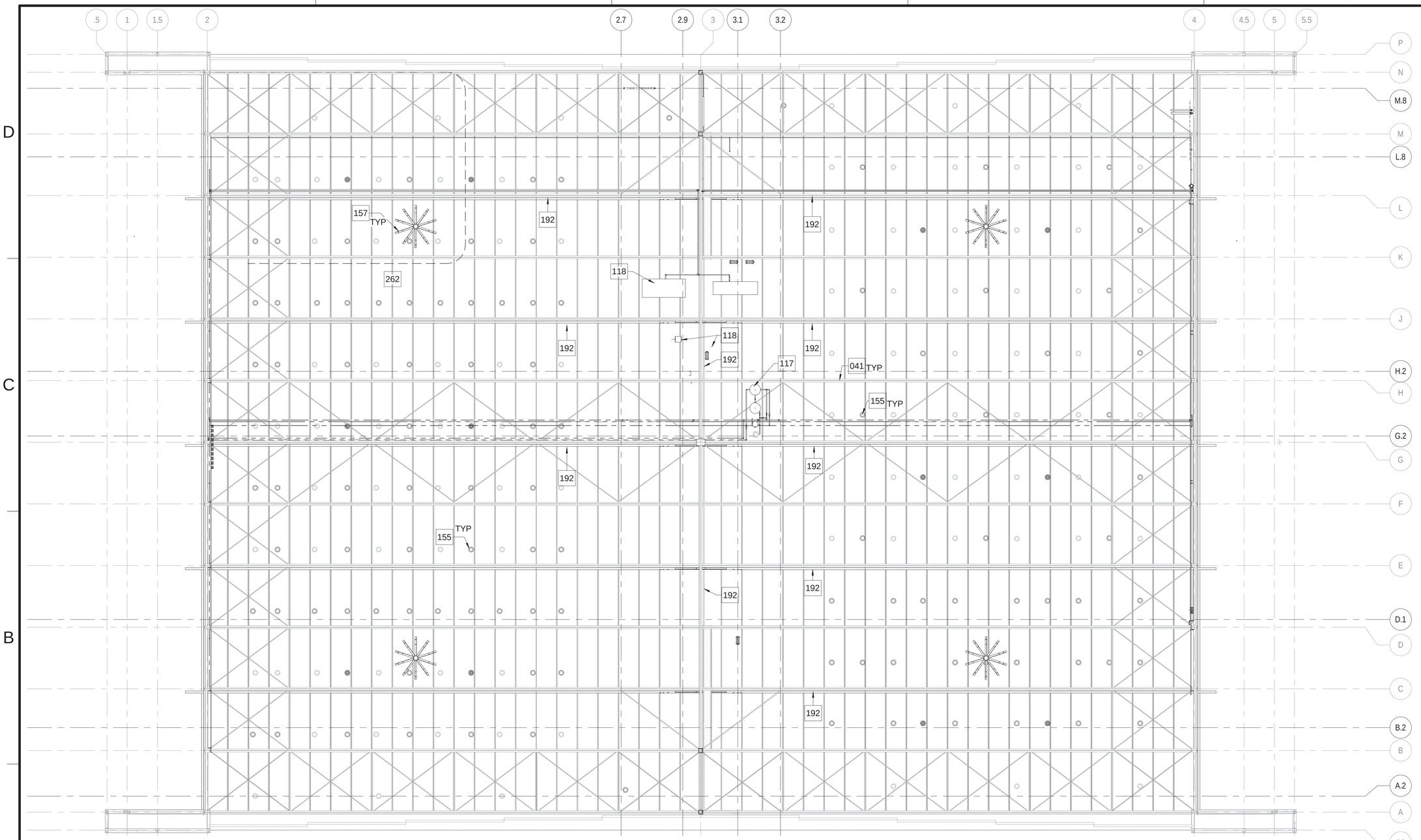

REFLECTED CEILING PLAN LEGEND

GYPSUM BOARD CEILING AS SCHEDULED.

CONTROL JOINT

ACOUSTICAL CEILING TILE; AS SCHEDULED.

LIGHT FIXTURE; REFER TO ELECTRICAL DRAWINGS.

OCCUPANCY SENSOR; REFER TO ELECTRICAL DRAWINGS.

WALL MOUNTED LIGHT FIXTURE; REFER TO ELECTRICAL DRAWINGS.

EXIT LIGHT FIXTURE; REFER TO ELECTRICAL DRAWINGS.

SUPPLY AIR DIFFUSERS; REFER TO MECHANICAL DRAWINGS.

RETURN AIR DIFUSSER; REFER TO MECHANICAL DRAWINGS.

REFLECTED CEILING PLAN - HANGAR

1/16" = 1'-0"

KEYNOTES

041	EXISTING STEEL ROOF STRUCTURE TO REMAIN PAINTED AS-IS, PROTECT DURING CONSTRUCTION
117	PLUMBING FIXTURE; REFER PLUMBING
118	MECHANICAL EQUIPMENT; REFER MECHANICAL
155	LIGHT FIXTURE; REFER ELECTRICAL (TYP)
157	HANGAR BAY FAN; REFER MECHANICAL
192	DRAFT CURTAIN ABOVE (TYP); REFER 9/A-511

PLAN NORTH

0' 8' 16' 32' 64'

SCALE: 3/64" = 1' - 0"

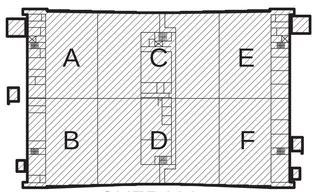

OVERALL KEY PLAN

APPR	
DATE	
DESCRIPTION	
SYM	

NAVFAC

REGISTERED ARCHITECT
STEVEN THOMAS PAGE
22853
STATE OF TEXAS
5-15-2015

JACOBS/ BURNS & MCDONNELL

JACOBS/BURNS & MCDONNELL, A JOINT VENTURE
155 NORTH LAKE AVENUE
PASADENA, CA 91101 USA
TEL 1 (817) 735-6000
FAX 1 (817) 735-6148

JEG NO. FDWD7911 A/E INFO

APPROVED
FOR COMMANDER NAVFAC 6/11/2015

ACTIVITY

SATISFACTORY TO DATE

DES	CPC	DRW	MTH	CHK	WRP

PMDM KAD
BRANCH MANAGER
CHIEF ENGARCH
FIRE PROTECTION

DEPARTMENT OF THE NAVY
NAVFAC PACIFIC
NAVAL FACILITIES ENGINEERING COMMAND
NAVAL FACILITIES ENGINEERING COMMAND ~ PACIFIC
JOINT BASE PEARL HARBOR - HICKAM
MARINE CORPS BASE HAWAII
KANEOHE, HAWAII
FY14 MCON PROJECT P-863
AIRCRAFT MAINTENANCE HANGAR UPGRADES
REFLECTED CEILING PLAN - HANGAR

SCALE	AS SHOWN
EPROJECT NO.	862914
CONSTR. CONTR. NO.	
NAVFAC DRAWING NO.	19043351
SHEET	86 OF 313

A-120

5/12/2015 7:36:09 AM

SCALE(S) AS NOTED ON THIS SHEET ARE BASED ON FULL SIZE ANSI D (22" x 34") SHEET. DRAWFORM REVISION: 10 MARCH 2009

FINAL DESIGN - 15 MAY 2015

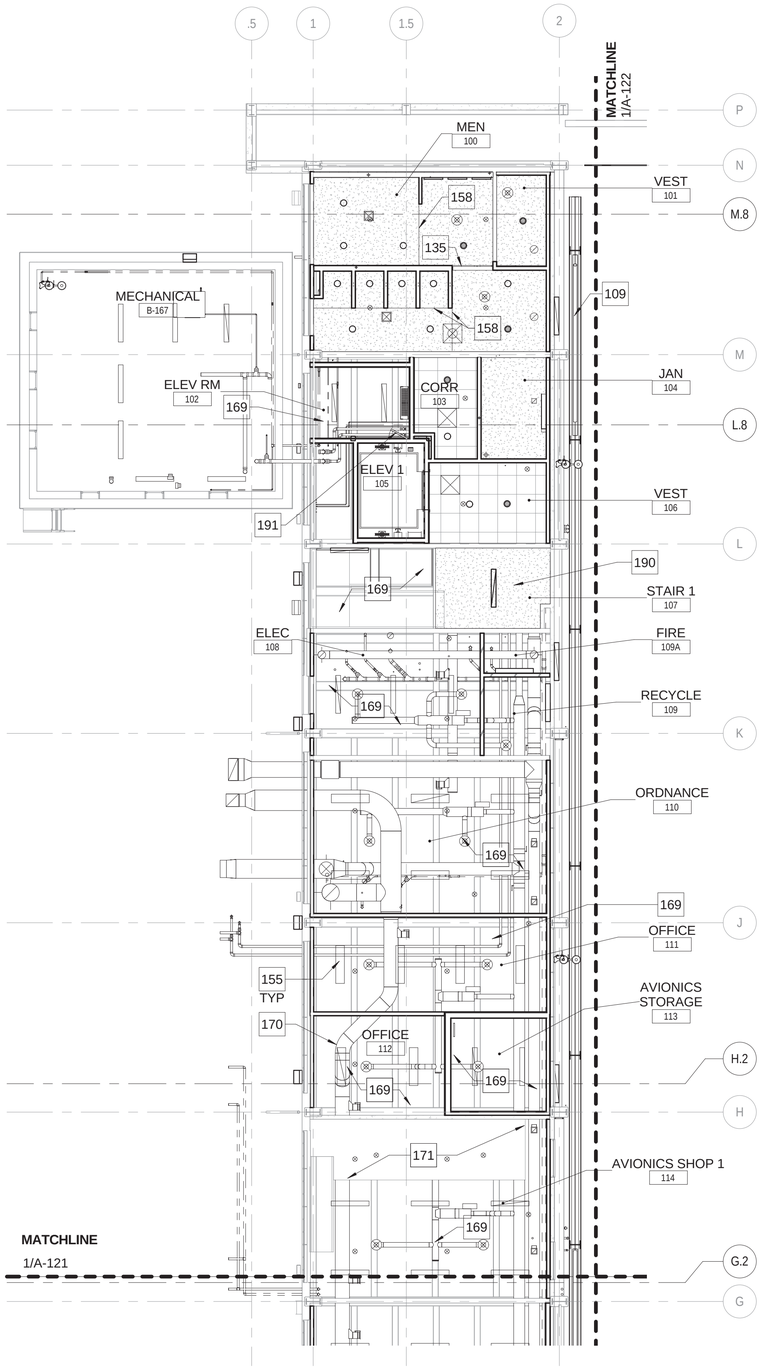

LEVEL 1 - REFLECTED CEILING PLAN - AREA A

1/8" = 1'-0"

1

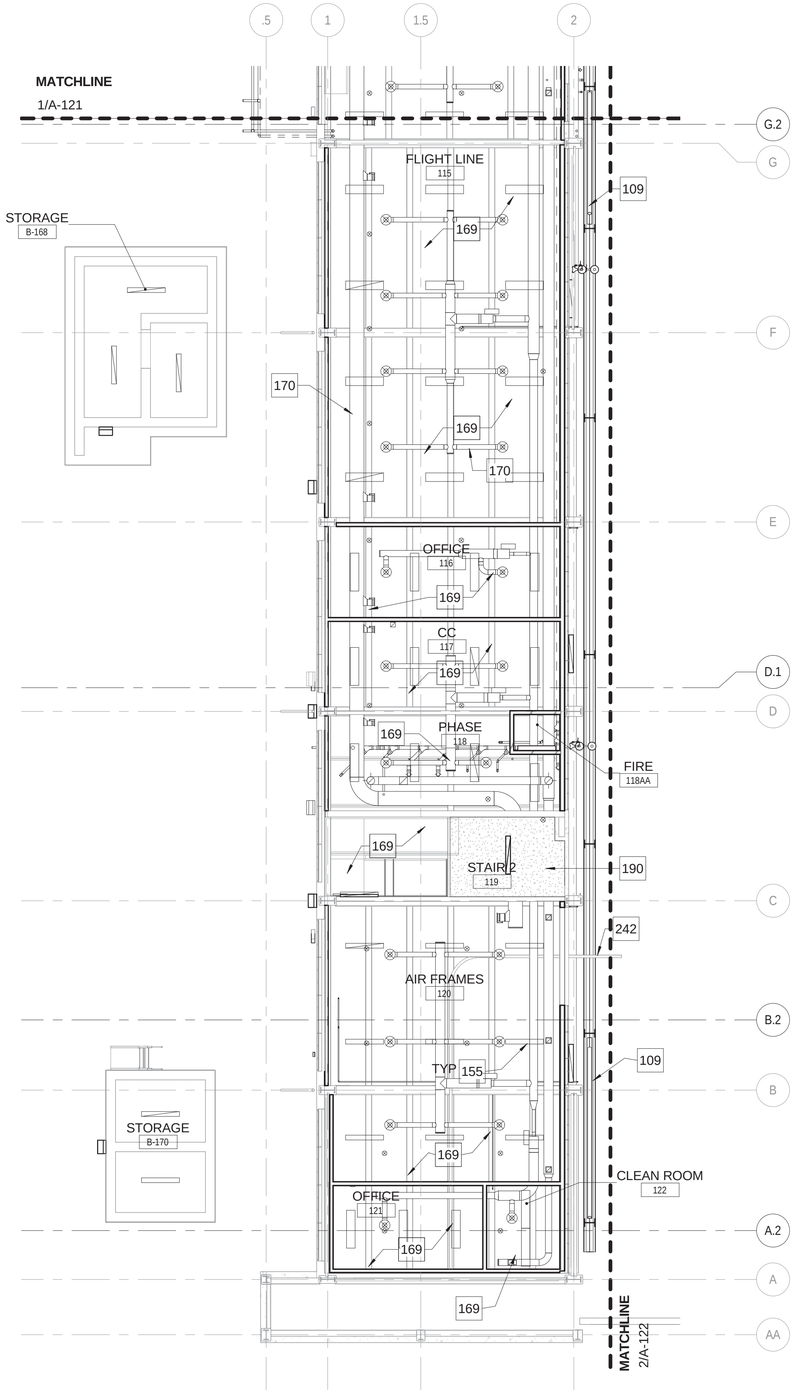

LEVEL 1 - REFLECTED CEILING PLAN - AREA B

1/8" = 1'-0"

2

0 16

SCALE: 1/8" = 1'-0"

GENERAL NOTES - REFLECTED CEILING PLANS

A	REFER I-101 THROUGH I-109 FOR FINISH PLANS. REFER TO I-601 FOR FINISH SCHEDULE.
B	ALL GYPSUM BOARD AND ACOUSTICAL CEILINGS TO BE 9'-0" ABOVE FINISH FLOOR UNLESS OTHERWISE NOTED.
C	PROVIDE HOLD-DOWN CLIPS AT ALL ACOUSTICAL CEILING TILE WITHIN 10'-0" OF AN EXTERIOR DOOR.
D	MOUNT 1/2" GYPSUM BOARD ON 2" RIGID INSULATION (R-12 MINIMUM) TO UNDERSIDE OF STRUCTURE IN ALL BAY AND STREET SIDE LEVEL 2 AREAS.
E	MINIMUM CLEAR HEIGHT FOR ALL CEILING MOUNTED EQUIPMENT, LIGHT FIXTURES, ETC. IN SHOP SPACES AT THE BAY, CENTER, AND STREET SIDES WILL BE 11'-0" MINIMUM UNLESS OTHERWISE NOTED.
F	MINIMUM CLEAR HEIGHT FOR ALL CEILING MOUNTED EQUIPMENT, LIGHT FIXTURES, ETC. IN ADMIN SPACES AT THE BAY, CENTER, AND STREET SIDES WILL BE 9'-0" MINIMUM UNLESS OTHERWISE NOTED.
G	MINIMUM CLEAR HEIGHT FOR ALL CEILING MOUNTED EQUIPMENT, LIGHT FIXTURES, ETC. IN CORRIDORS AT THE BAY AND STREET SIDES WILL BE 8'-0" MINIMUM UNLESS OTHERWISE NOTED.

KEYNOTES

109	STRUCTURAL CROSS BRACING; REFER STRUCTURAL FRAMING PLANS (TYP)
135	GYPSUM BOARD BULKHEAD, RE 6/A-511
155	LIGHT FIXTURE; REFER ELECTRICAL (TYP)
158	GYPSUM BOARD CEILING CONTROL JOINT; REFER 1/A-511
169	EXISTING STRUCTURE; CLEAN AND PAINT EXPOSED PORTIONS
170	MECHANICAL DUCT AND EQUIPMENT; REFER MECHANICAL
171	EXISTING MEZZANINE; CLEAN AND PAINT
190	1-HOUR RATED GYP BD CEILING.
191	2'-0" X 2'-0" GOVERNOR ACCESS PANEL, SILL AT 10'-0" AFF VERIFY WITH MANUFACTURER.
242	EXISTING HOIST BEAM AND SUPPORT CABLE TO REMAIN

REFLECTED CEILING PLAN LEGEND

GYPSUM BOARD CEILING AS SCHEDULED.

CONTROL JOINT

ACOUSTICAL CEILING TILE; AS SCHEDULED.

LIGHT FIXTURE; REFER TO ELECTRICAL DRAWINGS.

WALL MOUNTED LIGHT FIXTURE; REFER TO ELECTRICAL DRAWINGS.

EXIT LIGHT FIXTURE; REFER TO ELECTRICAL DRAWINGS.

OCCUPANCY SENSOR; REFER TO ELECTRICAL DRAWINGS.

SUPPLY AIR DIFFUSERS; REFER TO MECHANICAL DRAWINGS.

RETURN AIR DIFFUSER; REFER TO MECHANICAL DRAWINGS.

AIR DIFFUSER; REFER TO MECHANICAL DRAWINGS.

PLAN NORTH

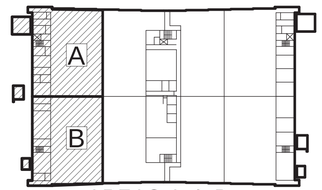

AREAS A & B
KEY PLAN

NO.	DESCRIPTION	DATE	APPR

NAVFAC

REGISTERED ARCHITECT
EVAN THOMAS MAJURE
6-15-2016
22853
STATE OF TEXAS

JACOBS/ BURNS & McDONNELL

JACOBS/BURNS & MCDONNELL, A JOINT VENTURE
155 NORTH LAKE AVENUE
PASADENA, CA 91101 USA
TEL 1 (817) 735-6000
FAX 1 (817) 735-6148

JEG NO. FDWD7911 A/E INFO

APPROVED
FOR COMMANDER NAVFAC 6/11/2015

ACTIVITY

SATISFACTORY TO DATE

DES	CPC	DRW	MTH	CHK	WRP

PMDM KAO
BRANCH MANAGER
CHIEF ENGARCH
FIRE PROTECTION

DEPARTMENT OF THE NAVY
NAVFAC PACIFIC
MARINE CORPS BASE HAWAII

NAVAL FACILITIES ENGINEERING COMMAND – PACIFIC
JOINT BASE PEARL HARBOR - HICKAM

KANEOHE, HAWAII

FY14 MCON PROJECT P-863
AIRCRAFT MAINTENANCE HANGAR UPGRADES

REFLECTED CEILING PLAN - LEVEL 1 - AREAS A & B

SCALE	AS SHOWN
EPROJECT NO.	862914
CONSTR. CONTR. NO.	
NAVFAC DRAWING NO.	19043352
SHEET	87 OF 313

A-121

FINAL DESIGN - 15 MAY 2015

SCALE(S) AS NOTED ON THIS SHEET ARE BASED ON FULL SIZE ANSI D (22 x 34) SHEET. DRAWFORM REVISION: 10 MARCH 2009

5/12/2015 7:36:27 AM

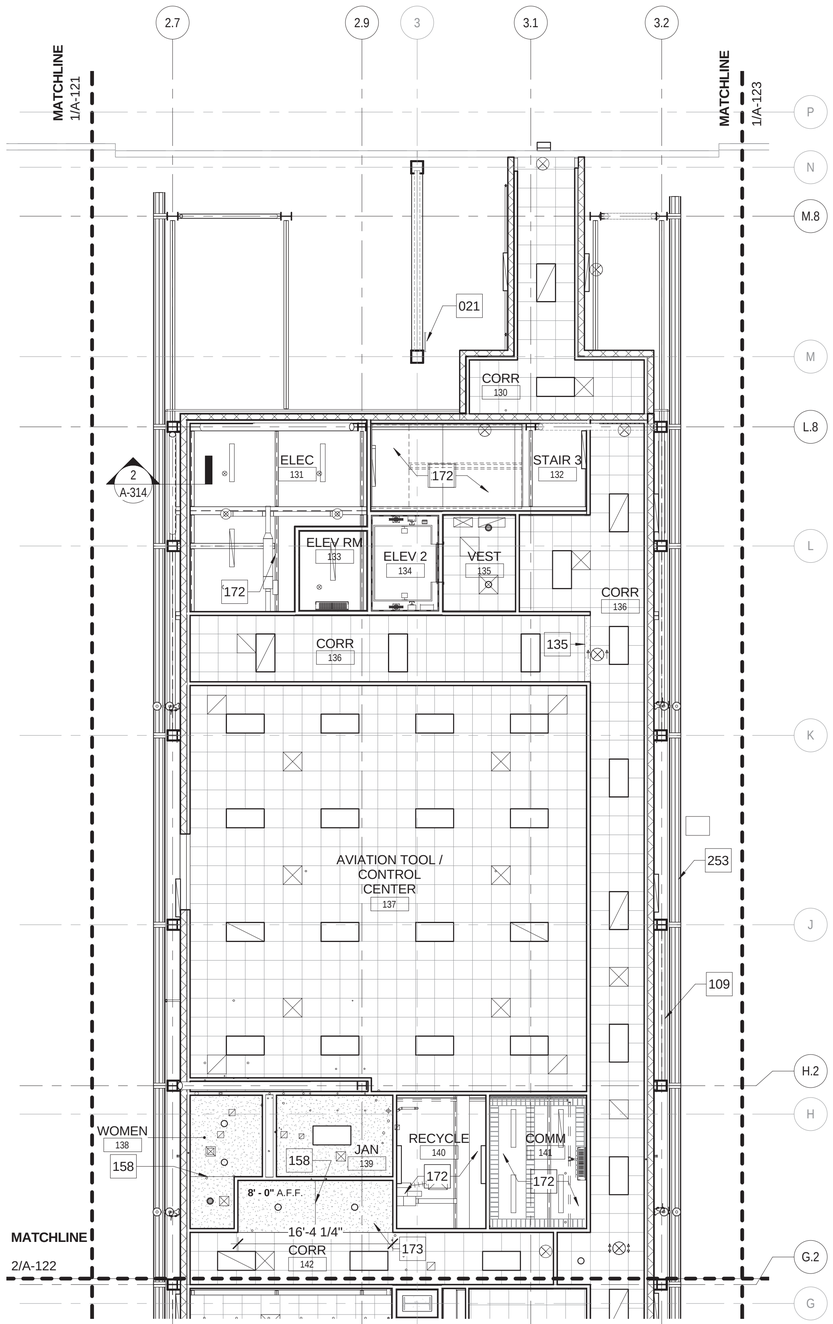

LEVEL 1 - REFLECTED CEILING PLAN - AREA C

1/8" = 1'-0"

1

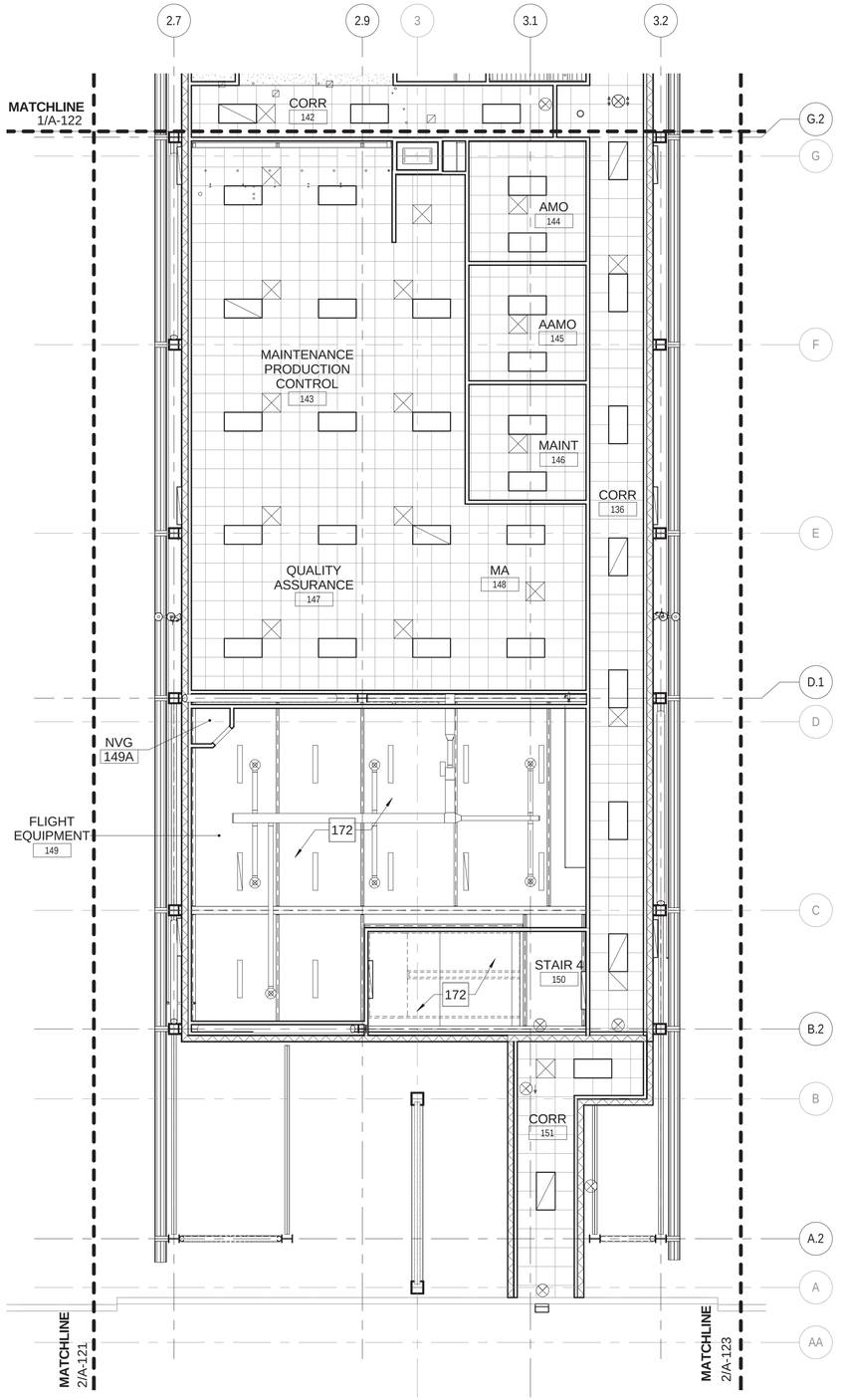

LEVEL 1 - REFLECTED CEILING PLAN - AREA D

1/8" = 1'-0"

2

0 16

SCALE: 1/8" = 1'-0"

GENERAL NOTES - REFLECTED CEILING PLANS

A	REFER I-101 THROUGH I-109 FOR FINISH PLANS. REFER TO I-601 FOR FINISH SCHEDULE.
B	ALL GYPSUM BOARD AND ACOUSTICAL CEILINGS TO BE 9'-0" ABOVE FINISH FLOOR UNLESS OTHERWISE NOTED.
C	PROVIDE HOLD-DOWN CLIPS AT ALL ACOUSTICAL CEILING TILE WITHIN 10'-0" OF AN EXTERIOR DOOR.
D	MOUNT 1/2" GYPSUM BOARD ON 2" RIGID INSULATION (R-12 MINIMUM) TO UNDERSIDE OF STRUCTURE IN ALL BAY AND STREET SIDE LEVEL 2 AREAS.
E	MINIMUM CLEAR HEIGHT FOR ALL CEILING MOUNTED EQUIPMENT, LIGHT FIXTURES, ETC. IN SHOP SPACES AT THE BAY, CENTER, AND STREET SIDES WILL BE 11'-0" MINIMUM UNLESS OTHERWISE NOTED.
F	MINIMUM CLEAR HEIGHT FOR ALL CEILING MOUNTED EQUIPMENT, LIGHT FIXTURES, ETC. IN ADMIN SPACES AT THE BAY, CENTER, AND STREET SIDES WILL BE 9'-0" MINIMUM UNLESS OTHERWISE NOTED.
G	MINIMUM CLEAR HEIGHT FOR ALL CEILING MOUNTED EQUIPMENT, LIGHT FIXTURES, ETC. IN CORRIDORS AT THE BAY AND STREET SIDES WILL BE 8'-0" MINIMUM UNLESS OTHERWISE NOTED.

KEYNOTES

021	EXISTING HISTORIC LADDER AND CATWALK ABOVE TO REMAIN, INSTALL A HINGED ACCESS LADDER SECURITY GATE TO FACE OF EXISTING LADDER TO RESTRICT ACCESS; REFER: 14/A-422
109	STRUCTURAL CROSS BRACING; REFER STRUCTURAL FRAMING PLANS (TYP)
135	GYPSUM BOARD BULKHEAD, RE 6/A-511
158	GYPSUM BOARD CEILING CONTROL JOINT; REFER 1/A-511
170	MECHANICAL DUCT AND EQUIPMENT; REFER MECHANICAL
172	EXPOSED STRUCTURE
173	GYPSUM BOARD SOFFIT; REFER 5/A-511
253	STEEL RAILS FOR BRIDGE CRANE; REFER: STRUCTURAL

REFLECTED CEILING PLAN LEGEND

GYPSUM BOARD CEILING AS SCHEDULED.

CONTROL JOINT

ACOUSTICAL CEILING TILE; AS SCHEDULED.

LIGHT FIXTURE; REFER TO ELECTRICAL DRAWINGS.

WALL MOUNTED LIGHT FIXTURE; REFER TO ELECTRICAL DRAWINGS.

EXIT LIGHT FIXTURE; REFER TO ELECTRICAL DRAWINGS.

OCCUPANCY SENSOR; REFER TO ELECTRICAL DRAWINGS.

SUPPLY AIR DIFFUSERS; REFER TO MECHANICAL DRAWINGS.

RETURN AIR DIFFUSER; REFER TO MECHANICAL DRAWINGS.

AIR DIFFUSER; REFER TO MECHANICAL DRAWINGS.

PLAN NORTH

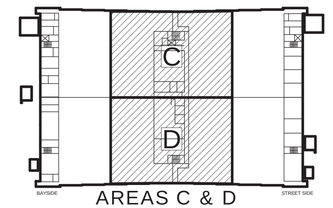

AREAS C & D
KEY PLAN

NO.	DATE	DESCRIPTION	APPR

NAVFAC

REGISTERED ARCHITECT
STEVEN THOMAS
05-15-2015
22853
STATE OF TEXAS

JACOBS/ BURNS & MCDONNELL

JACOBS/BURNS & MCDONNELL, A JOINT VENTURE
155 NORTH LAKE AVENUE
PASADENA, CA 91101 USA
TEL 1 (817) 735-6000
FAX 1 (817) 735-6148

JEG NO. FDWD7911 A/E INFO

APPROVED
FOR COMMANDER NAVFAC 6/11/2015

ACTIVITY

SATISFACTORY TO DATE

DES	CPC	DRW	MTH	CHK	WRP

PWDM
BRANCH MANAGER
CHIEF ENGARCH
FIRE PROTECTION

DEPARTMENT OF THE NAVY
NAVFAC PACIFIC
NAVAL FACILITIES ENGINEERING COMMAND – PACIFIC
JOINT BASE PEARL HARBOR - HICKAM
MARINE CORPS BASE HAWAII
KANEOHE, HAWAII
FY14 MCON PROJECT P-863
AIRCRAFT MAINTENANCE HANGAR UPGRADES
REFLECTED CEILING PLAN - LEVEL 1 - AREAS C & D

SCALE	AS SHOWN
EPROJECT NO.	862914
CONSTR. CONTR. NO.	
NAVFAC DRAWING NO.	19043353
SHEET	88 OF 313

A-122

FINAL DESIGN: 15 MAY 2015

5/12/2015 7:36:41 AM

SCALE(S) AS NOTED ON THIS SHEET ARE BASED ON FULL SIZE ANSI D (22 x 34) SHEET. DRAWFORM REVISION: 10 MARCH 2009

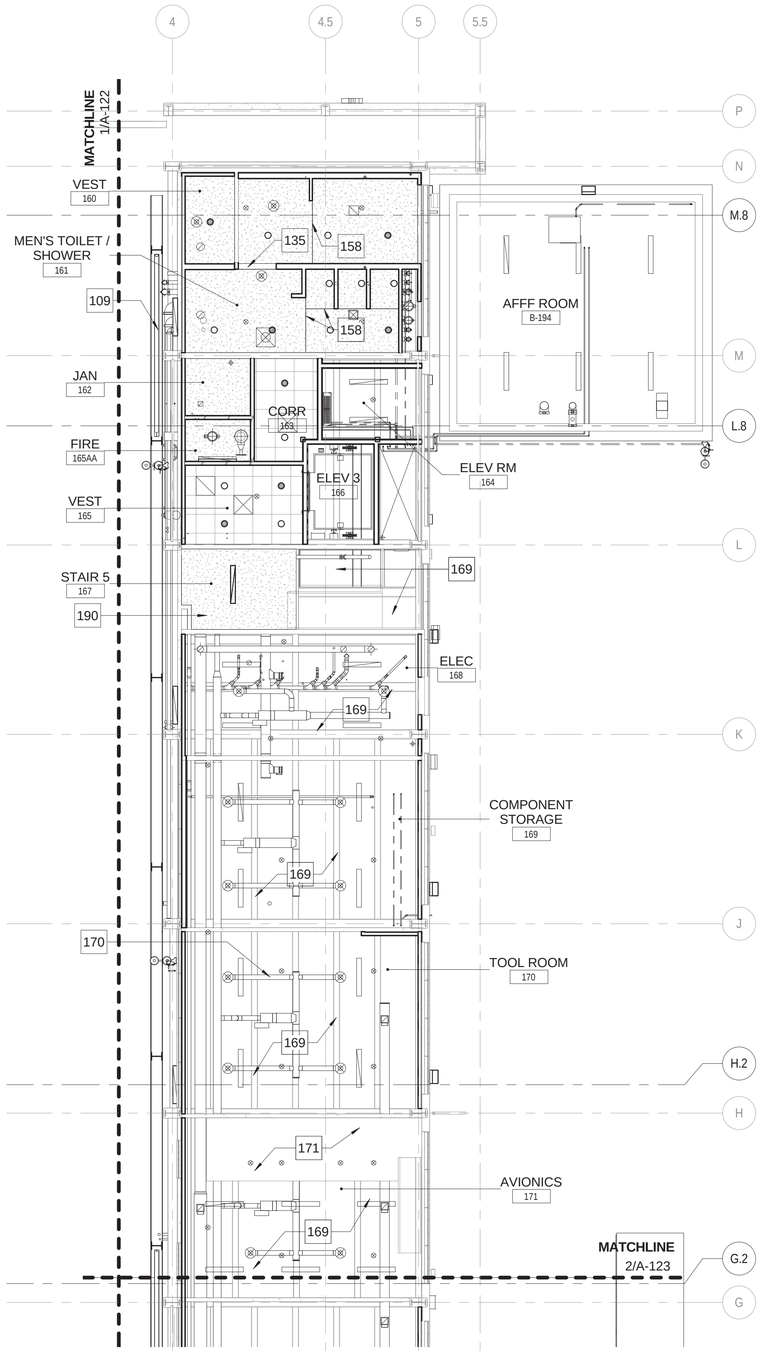

LEVEL 1 - REFLECTED CEILING PLAN - AREA E

1/8" = 1'-0"

1

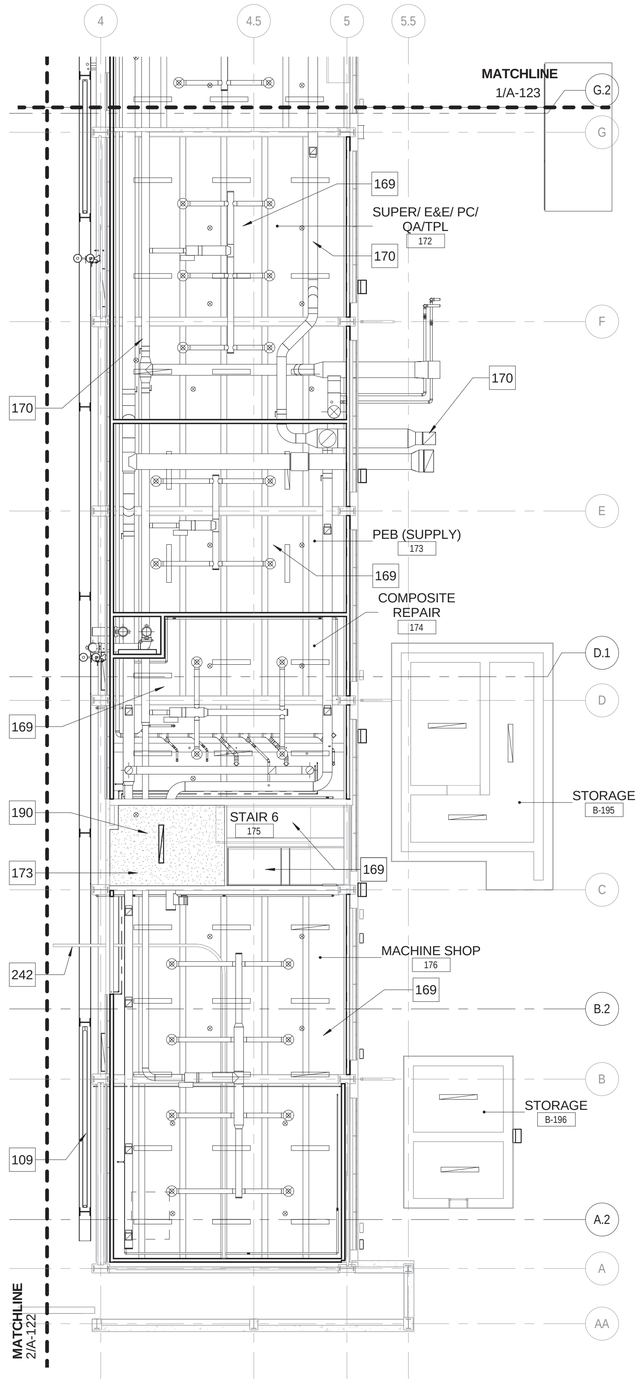

LEVEL 1 - REFLECTED CEILING PLAN - AREA F

1/8" = 1'-0"

2

0 16

SCALE: 1/8" = 1'-0"

GENERAL NOTES - REFLECTED CEILING PLANS

A	REFER I-101 THROUGH I-109 FOR FINISH PLANS. REFER TO I-601 FOR FINISH SCHEDULE.
B	ALL GYPSUM BOARD AND ACOUSTICAL CEILINGS TO BE 9'-0" ABOVE FINISH FLOOR UNLESS OTHERWISE NOTED.
C	PROVIDE HOLD-DOWN CLIPS AT ALL ACOUSTICAL CEILING TILE WITHIN 10'-0" OF AN EXTERIOR DOOR.
D	MOUNT 1/2" GYPSUM BOARD ON 2" RIGID INSULATION (R-12 MINIMUM) TO UNDERSIDE OF STRUCTURE IN ALL BAY AND STREET SIDE LEVEL 2 AREAS.
E	MINIMUM CLEAR HEIGHT FOR ALL CEILING MOUNTED EQUIPMENT, LIGHT FIXTURES, ETC. IN SHOP SPACES AT THE BAY, CENTER, AND STREET SIDES WILL BE 11'-0" MINIMUM UNLESS OTHERWISE NOTED.
F	MINIMUM CLEAR HEIGHT FOR ALL CEILING MOUNTED EQUIPMENT, LIGHT FIXTURES, ETC. IN ADMIN SPACES AT THE BAY, CENTER, AND STREET SIDES WILL BE 9'-0" MINIMUM UNLESS OTHERWISE NOTED.
G	MINIMUM CLEAR HEIGHT FOR ALL CEILING MOUNTED EQUIPMENT, LIGHT FIXTURES, ETC. IN CORRIDORS AT THE BAY AND STREET SIDES WILL BE 8'-0" MINIMUM UNLESS OTHERWISE NOTED.

KEYNOTES

109	STRUCTURAL CROSS BRACING; REFER STRUCTURAL FRAMING PLANS (TYP)
135	GYPSUM BOARD BULKHEAD, RE 6/A-511
158	GYPSUM BOARD CEILING CONTROL JOINT; REFER 1/A-511
169	EXISTING STRUCTURE; CLEAN AND PAINT EXPOSED PORTIONS
170	MECHANICAL DUCT AND EQUIPMENT; REFER MECHANICAL
171	EXISTING MEZZANINE; CLEAN AND PAINT
173	GYPSUM BOARD SOFFIT; REFER 5/A-511
190	1-HOUR RATED GYP BD CEILING.
242	EXISTING HOIST BEAM AND SUPPORT CABLE TO REMAIN

REFLECTED CEILING PLAN LEGEND

- GYPSUM BOARD CEILING AS SCHEDULED.
- CONTROL JOINT
- ACOUSTICAL CEILING TILE; AS SCHEDULED.
- LIGHT FIXTURE; REFER TO ELECTRICAL DRAWINGS.
- WALL MOUNTED LIGHT FIXTURE; REFER TO ELECTRICAL DRAWINGS.
- EXIT LIGHT FIXTURE; REFER TO ELECTRICAL DRAWINGS.
- OCCUPANCY SENSOR; REFER TO ELECTRICAL DRAWINGS.
- SUPPLY AIR DIFFUSERS; REFER TO MECHANICAL DRAWINGS.
- RETURN AIR DIFFUSER; REFER TO MECHANICAL DRAWINGS.
- AIR DIFFUSER; REFER TO MECHANICAL DRAWINGS.

PLAN NORTH

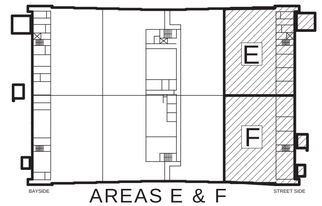

AREAS E & F
KEY PLAN

	DATE	DESCRIPTION	SYM

NAVFAC

REGISTERED ARCHITECT EVAN THOMAS MINZE 22853 STATE OF TEXAS 5-15-2015

JACOBS/ BURNS & MCDONNELL
JACOBS/BURNS & MCDONNELL, A JOINT VENTURE
155 NORTH LAKE AVENSE
PASADENA, CA 91101 USA
TEL 1 (817) 735-6000
FAX 1 (817) 735-6148

JEG NO. FDWD7911 A/E INFO

APPROVED
FOR COMMANDER NAVFAC 6/11/2015

ACTIVITY

SATISFACTORY TO DATE

DES	CPC	DRW	MTH	CHK	WRP
PMDM					KAD
BRANCH MANAGER					
CHIEF ENGARCH					
FIRE PROTECTION					

DEPARTMENT OF THE NAVY
NAVFAC PACIFIC
NAVAL FACILITIES ENGINEERING COMMAND ~ PACIFIC
JOINT BASE PEARL HARBOR - HICKAM
MARINE CORPS BASE HAWAII
KANEOHE, HAWAII
FY14 MCON PROJECT P-863
AIRCRAFT MAINTENANCE HANGAR UPGRADES
REFLECTED CEILING PLAN - LEVEL 1 - AREAS E & F

SCALE	AS SHOWN
EPROJECT NO.	862914
CONSTR. CONTR. NO.	
NAVFAC DRAWING NO.	19043354
SHEET	89 OF 313

A-123

FINAL DESIGN - 15 MAY 2015

SCALE(S) AS NOTED ON THIS SHEET ARE BASED ON FULL SIZE ANSI D (22" x 34") SHEET. DRAWFORM REVISION: 10 MARCH 2009

5/12/2015 7:36:58 AM

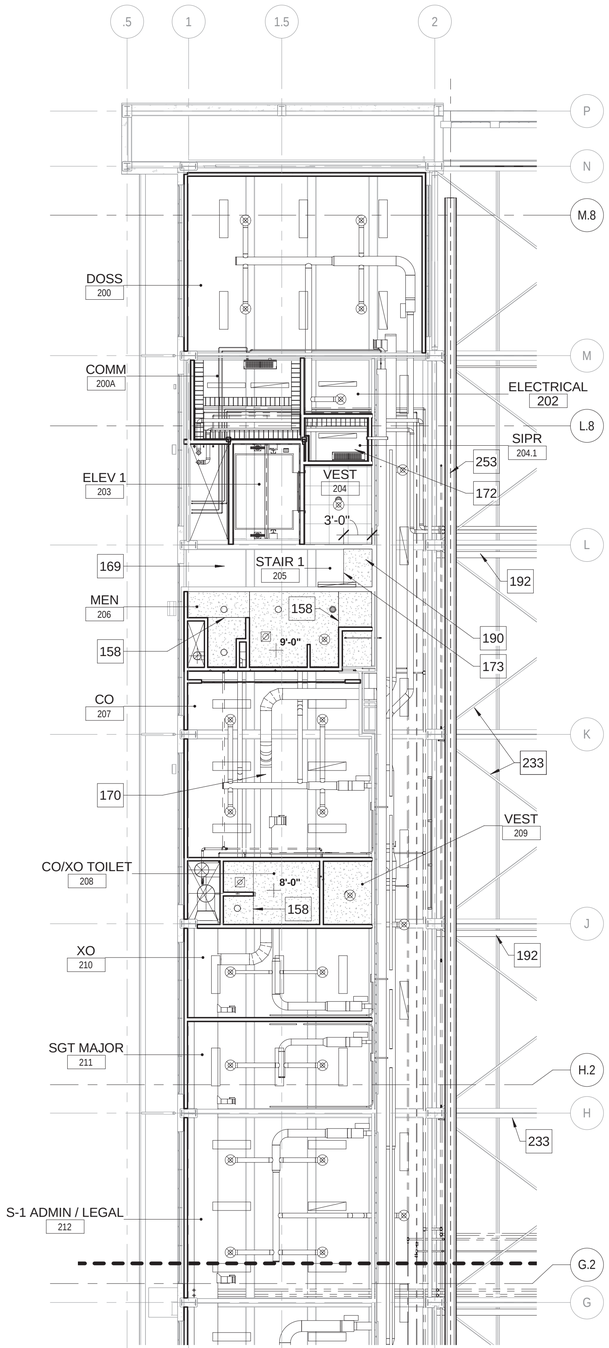

LEVEL 2 - REFLECTED CEILING PLAN - AREA A

1/8" = 1'-0"

A-124 (1)

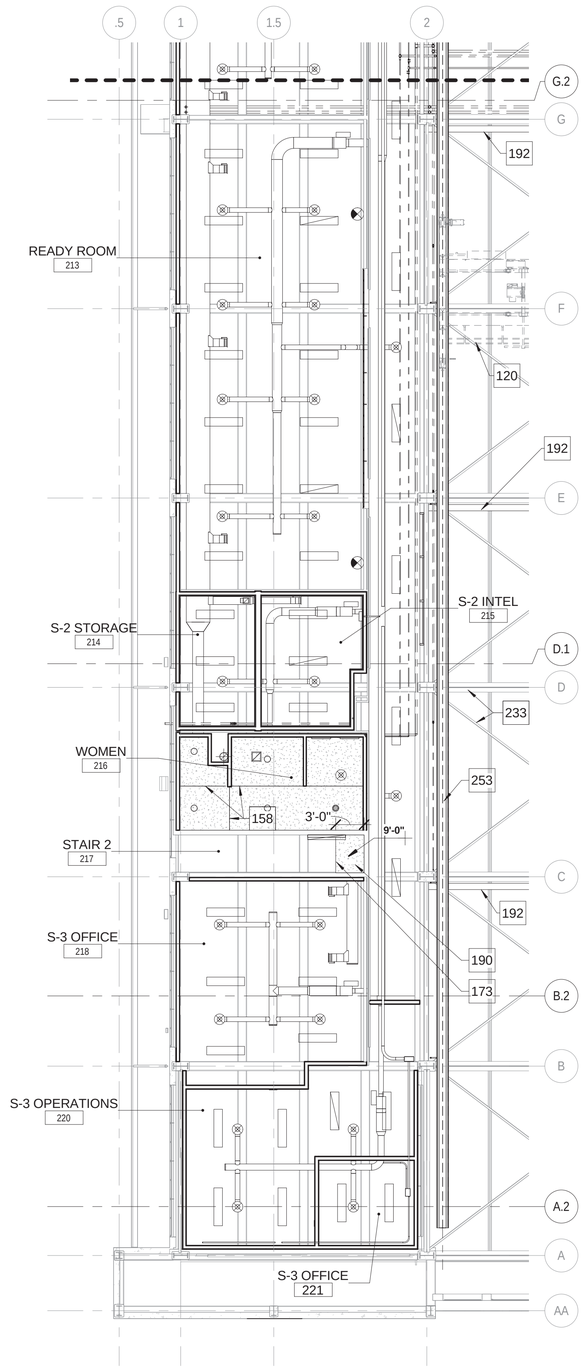

LEVEL 2 - REFLECTED CEILING PLAN - AREA B

1/8" = 1'-0"

A-124 (2)

0 16

SCALE: 1/8" = 1'-0"

GENERAL NOTES - REFLECTED CEILING PLANS

A	REFER I-101 THROUGH I-109 FOR FINISH PLANS. REFER TO I-601 FOR FINISH SCHEDULE.
B	ALL GYPSUM BOARD AND ACOUSTICAL CEILINGS TO BE 9'-0" ABOVE FINISH FLOOR UNLESS OTHERWISE NOTED.
C	PROVIDE HOLD-DOWN CLIPS AT ALL ACOUSTICAL CEILING TILE WITHIN 10'-0" OF AN EXTERIOR DOOR.
D	MOUNT 1/2" GYPSUM BOARD ON 2" RIGID INSULATION (R-12 MINIMUM) TO UNDERSIDE OF STRUCTURE IN ALL BAY AND STREET SIDE LEVEL 2 AREAS.
E	MINIMUM CLEAR HEIGHT FOR ALL CEILING MOUNTED EQUIPMENT, LIGHT FIXTURES, ETC. IN SHOP SPACES AT THE BAY, CENTER, AND STREET SIDES WILL BE 11'-0" MINIMUM UNLESS OTHERWISE NOTED.
F	MINIMUM CLEAR HEIGHT FOR ALL CEILING MOUNTED EQUIPMENT, LIGHT FIXTURES, ETC. IN ADMIN SPACES AT THE BAY, CENTER, AND STREET SIDES WILL BE 9'-0" MINIMUM UNLESS OTHERWISE NOTED.
G	MINIMUM CLEAR HEIGHT FOR ALL CEILING MOUNTED EQUIPMENT, LIGHT FIXTURES, ETC. IN CORRIDORS AT THE BAY AND STREET SIDES WILL BE 8'-0" MINIMUM UNLESS OTHERWISE NOTED.

KEYNOTES

120	7 1/2 TON TOP RUNNING OVERHEAD BRIDGE CRANE, ABOVE
158	GYPSUM BOARD CEILING CONTROL JOINT; REFER 1/A-511
169	EXISTING STRUCTURE; CLEAN AND PAINT EXPOSED PORTIONS
170	MECHANICAL DUCT AND EQUIPMENT; REFER MECHANICAL
172	EXPOSED STRUCTURE
173	GYPSUM BOARD SOFFIT; REFER 5/A-511
190	1-HOUR RATED GYP BD CEILING.
192	DRAFT CURTAIN ABOVE (TYP); REFER 9/A-511
233	EXISTING STRUCTURE, PAINTED AS-IS
253	STEEL RAILS FOR BRIDGE CRANE; REFER: STRUCTURAL

REFLECTED CEILING PLAN LEGEND

- GYPSUM BOARD CEILING AS SCHEDULED.
- CONTROL JOINT
- ACOUSTICAL CEILING TILE; AS SCHEDULED.
- LIGHT FIXTURE; REFER TO ELECTRICAL DRAWINGS.
- WALL MOUNTED LIGHT FIXTURE; REFER TO ELECTRICAL DRAWINGS.
- EXIT LIGHT FIXTURE; REFER TO ELECTRICAL DRAWINGS.
- OCCUPANCY SENSOR; REFER TO ELECTRICAL DRAWINGS.
- SUPPLY AIR DIFFUSERS; REFER TO MECHANICAL DRAWINGS.
- RETURN AIR DIFFUSER; REFER TO MECHANICAL DRAWINGS.
- AIR DIFFUSER; REFER TO MECHANICAL DRAWINGS.

PLAN NORTH

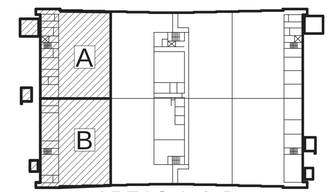

AREAS A & B KEY PLAN

APPR	DATE	DESCRIPTION	SYM

NAVFAC

REGISTERED ARCHITECT — STEVEN THOMAS CRAIG — 22853 — STATE OF TEXAS — 05-15-2015

JACOBS/BURNS & MCDONNELL

JACOBS/BURNS & MCDONNELL, A JOINT VENTURE
155 NORTH LAKE AVENUE
PASADENA, CA 91101 USA
TEL 1 (817) 735-6000
FAX 1 (817) 735-6148

JEG NO. FDWD7911 A/E INFO

APPROVED
FOR COMMANDER NAVFAC 6/11/2015

ACTIVITY

SATISFACTORY TO DATE

DES	CPC	DRW	MTH	CHK	WRP

PM/DM KAO
BRANCH MANAGER PM
CHIEF ENG/ARCH
FIRE PROTECTION JL

DEPARTMENT OF THE NAVY
NAVFAC PACIFIC
MARINE CORPS BASE HAWAII
NAVAL FACILITIES ENGINEERING COMMAND – PACIFIC
JOINT BASE PEARL HARBOR - HICKAM
KANEOHE, HAWAII
FY14 MCON PROJECT P-863
AIRCRAFT MAINTENANCE HANGAR UPGRADES
REFLECTED CEILING PLAN -LEVEL 2 - AREAS A & B

SCALE	AS SHOWN
EPROJECT NO.	862914
CONSTR. CONTR. NO.	
NAVFAC DRAWING NO.	19043355
SHEET	90 OF 313

A-124

FINAL DESIGN - 15 MAY 2015

5/12/2015 7:37:12 AM

SCALE(S) AS NOTED ON THIS SHEET ARE BASED ON FULL SIZE ANSI D (22" x 34") SHEET. DRAWFORM REVISION: 10 MARCH 2009

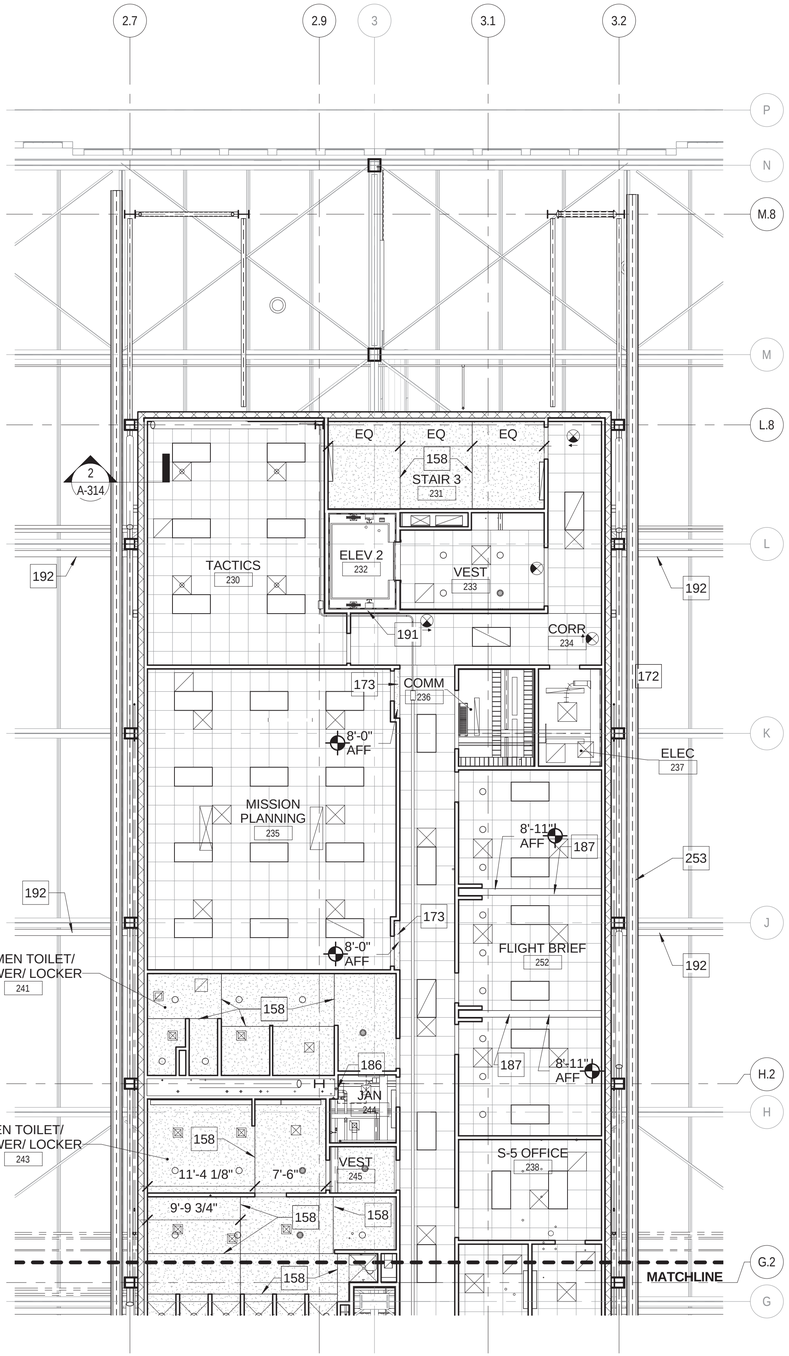

LEVEL 2 - REFLECTED CEILING PLAN - AREA C

1/8" = 1'-0"

A-125 (1)

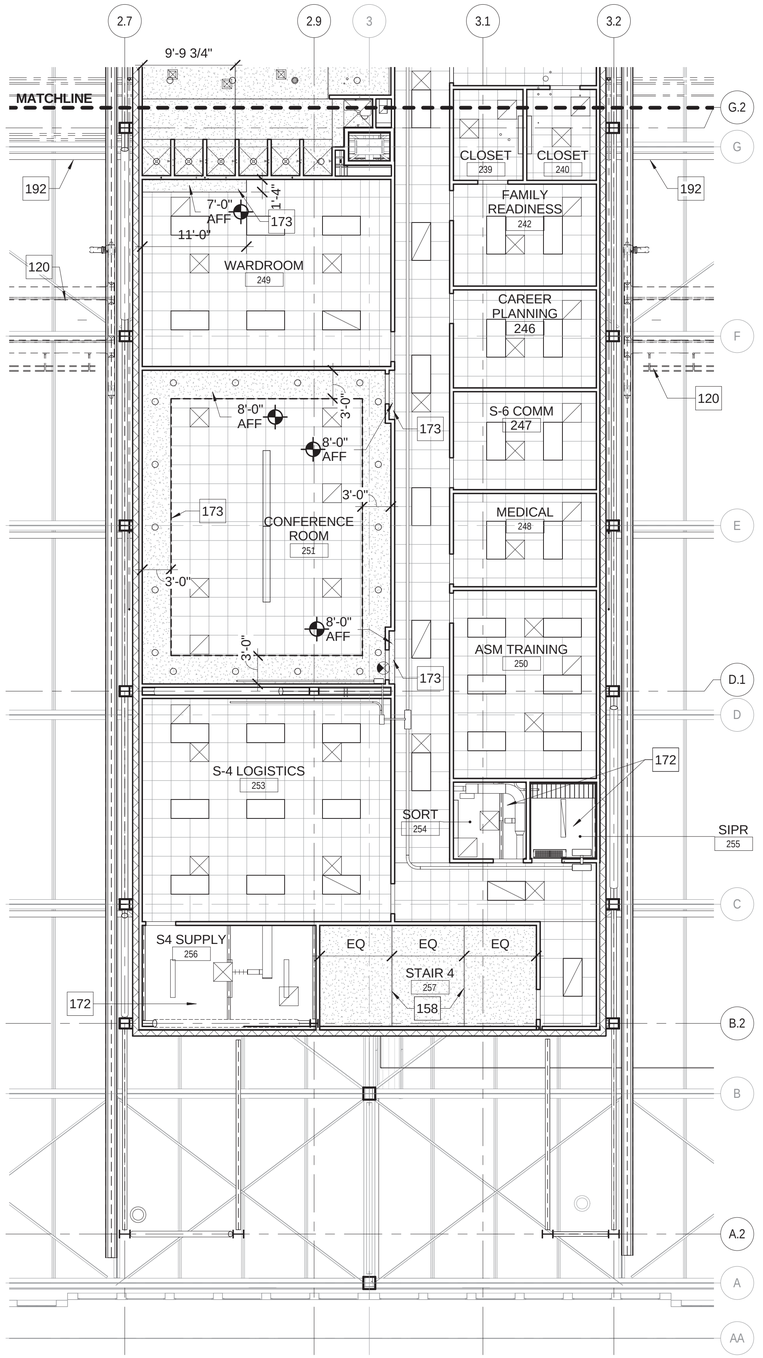

LEVEL 2 - REFLECTED CEILING PLAN - AREA D

1/8" = 1'-0"

A-125 (2)

SCALE: 1/8" = 1'-0"

GENERAL NOTES - REFLECTED CEILING PLANS

A	REFER I-101 THROUGH I-109 FOR FINISH PLANS. REFER TO I-601 FOR FINISH SCHEDULE.
B	ALL GYPSUM BOARD AND ACOUSTICAL CEILINGS TO BE 9'-0" ABOVE FINISH FLOOR UNLESS OTHERWISE NOTED.
C	PROVIDE HOLD-DOWN CLIPS AT ALL ACOUSTICAL CEILING TILE WITHIN 10'-0" OF AN EXTERIOR DOOR.
D	MOUNT 1/2" GYPSUM BOARD ON 2" RIGID INSULATION (R-12 MINIMUM) TO UNDERSIDE OF STRUCTURE IN ALL BAY AND STREET SIDE LEVEL 2 AREAS.
E	MINIMUM CLEAR HEIGHT FOR ALL CEILING MOUNTED EQUIPMENT, LIGHT FIXTURES, ETC. IN SHOP SPACES AT THE BAY, CENTER, AND STREET SIDES WILL BE 11'-0" MINIMUM UNLESS OTHERWISE NOTED.
F	MINIMUM CLEAR HEIGHT FOR ALL CEILING MOUNTED EQUIPMENT, LIGHT FIXTURES, ETC. IN ADMIN SPACES AT THE BAY, CENTER, AND STREET SIDES WILL BE 9'-0" MINIMUM UNLESS OTHERWISE NOTED.
G	MINIMUM CLEAR HEIGHT FOR ALL CEILING MOUNTED EQUIPMENT, LIGHT FIXTURES, ETC. IN CORRIDORS AT THE BAY AND STREET SIDES WILL BE 8'-0" MINIMUM UNLESS OTHERWISE NOTED.

KEYNOTES

120	7 1/2 TON TOP RUNNING OVERHEAD BRIDGE CRANE, ABOVE
158	GYPSUM BOARD CEILING CONTROL JOINT; REFER 1/A-511
172	EXPOSED STRUCTURE
173	GYPSUM BOARD SOFFIT; REFER 5/A-511
186	ROOF ACCESS LADDER AND ROOF HATCH ABOVE
187	GYPSUM BOARD BULKHEAD FOR OPERABLE PARTITION, RE 6/A-511
191	2'-0" X 2'-0" GOVERNOR ACCESS PANEL, SILL AT 10'-0" AFF VERIFY WITH MANUFACTURER.
192	DRAFT CURTAIN ABOVE (TYP); REFER 9/A-511
253	STEEL RAILS FOR BRIDGE CRANE; REFER: STRUCTURAL

REFLECTED CEILING PLAN LEGEND

- GYPSUM BOARD CEILING AS SCHEDULED.
- CONTROL JOINT
- ACOUSTICAL CEILING TILE; AS SCHEDULED.
- LIGHT FIXTURE; REFER TO ELECTRICAL DRAWINGS.
- WALL MOUNTED LIGHT FIXTURE; REFER TO ELECTRICAL DRAWINGS.
- EXIT LIGHT FIXTURE; REFER TO ELECTRICAL DRAWINGS.
- OCCUPANCY SENSOR; REFER TO ELECTRICAL DRAWINGS.
- SUPPLY AIR DIFFUSERS; REFER TO MECHANICAL DRAWINGS.
- RETURN AIR DIFFUSER; REFER TO MECHANICAL DRAWINGS.
- AIR DIFFUSER; REFER TO MECHANICAL DRAWINGS.

PLAN NORTH

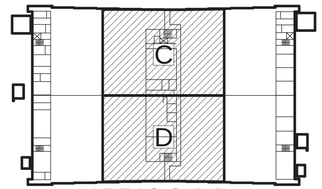

AREAS C & D
KEY PLAN

NO.	DESCRIPTION	DATE	APPR

NAVFAC

REGISTERED ARCHITECT EVAN THOMAS MINZE 22853 STATE OF TEXAS 5-15-2015

JACOBS/BURNS & McDONNELL

JACOBS/BURNS & MCDONNELL, A JOINT VENTURE
155 NORTH LAKE AVENUE
PASADENA, CA 91101 USA
TEL 1 (817) 735-6000
FAX 1 (817) 735-6148

JEG NO. FDWD7911 A/E INFO

APPROVED
FOR COMMANDER NAVFAC 6/11/2015

ACTIVITY

SATISFACTORY TO DATE

DES	CPC	DRW	MTH	CHK	WRP

PMDM KPAD
BRANCH MANAGER
CHIEF ENGR/RCH
FIRE PROTECTION

DEPARTMENT OF THE NAVY
NAVFAC PACIFIC
NAVAL FACILITIES ENGINEERING COMMAND ~ PACIFIC
JOINT BASE PEARL HARBOR - HICKAM
MARINE CORPS BASE HAWAII
KANEOHE, HAWAII
FY14 MCON PROJECT P-863
AIRCRAFT MAINTENANCE HANGAR UPGRADES
REFLECTED CEILING PLAN - LEVEL 2 - AREAS C & D

SCALE	AS SHOWN
EPROJECT NO.	862914
CONSTR. CONTR. NO.	
NAVFAC DRAWING NO.	19043356
SHEET	91 OF 313

A-125

5/12/2015 7:37:27 AM

SCALE(S) AS NOTED ON THIS SHEET ARE BASED ON FULL SIZE ANSI D (22" x 34") SHEET. DRAWFORM REVISION: 10 MARCH 2009

FINAL DESIGN - 15 MAY 2015

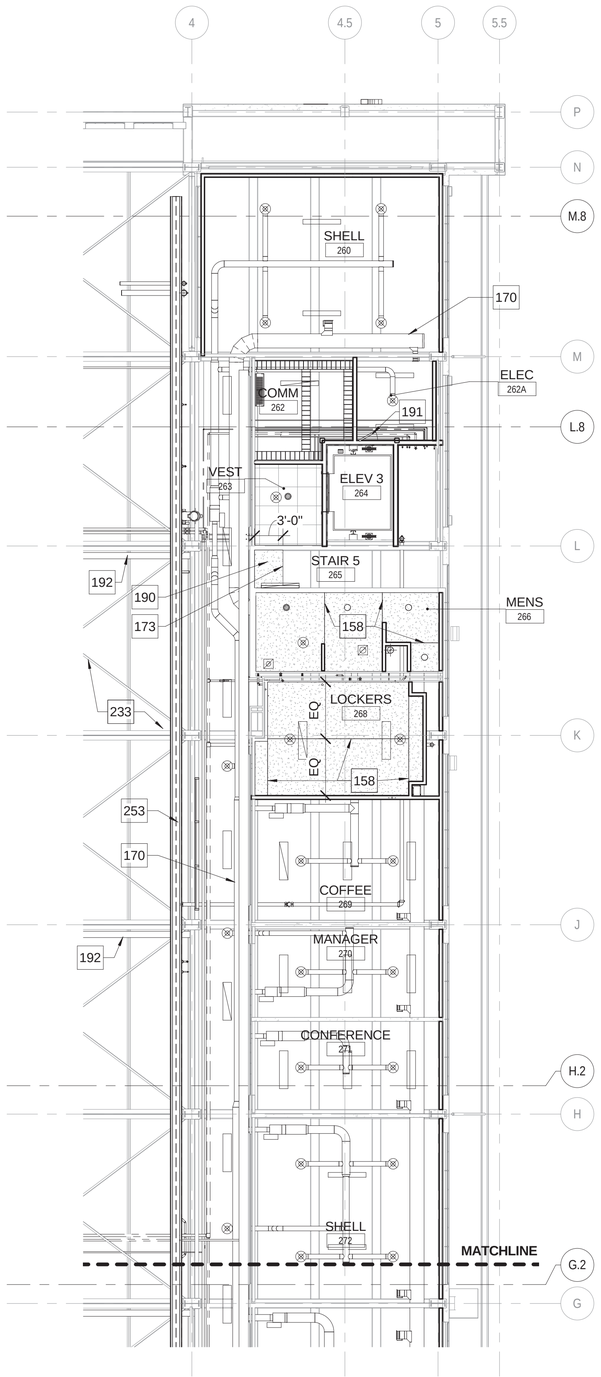

LEVEL 2 - REFLECTED CEILING PLAN - AREA E

1/8" = 1'-0"

A-126 (1)

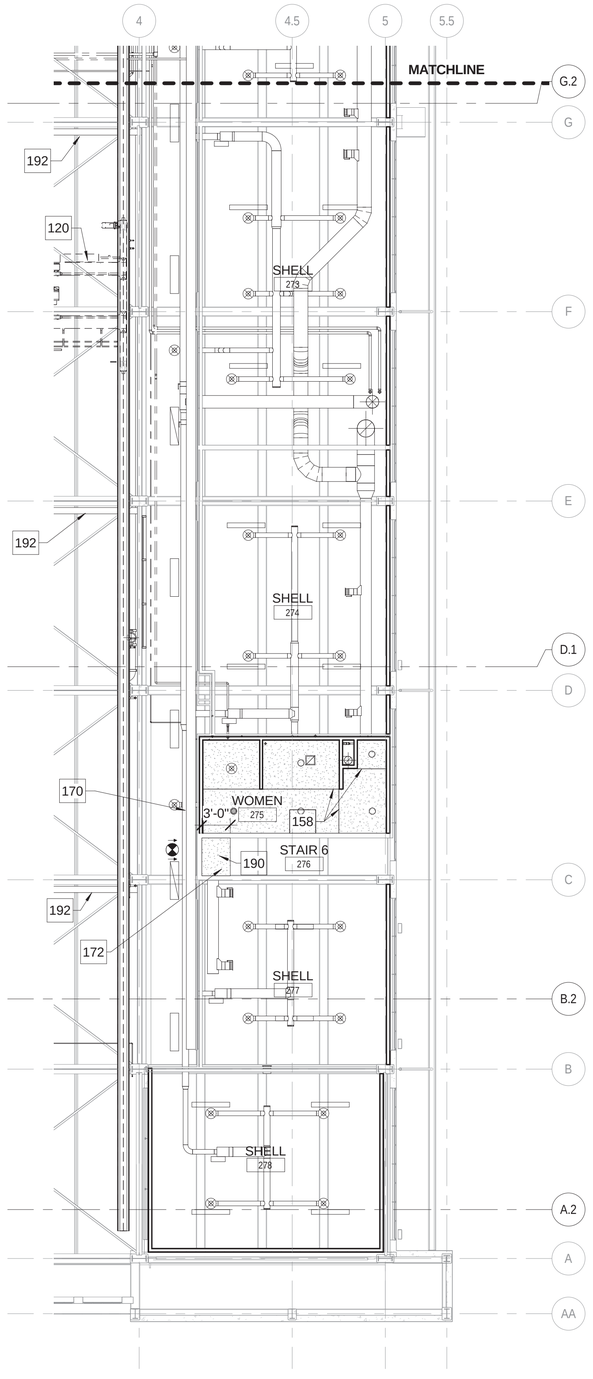

LEVEL 2 - REFLECTED CEILING PLAN - AREA F

1/8" = 1'-0"

A-126 (2)

0 16

SCALE: 1/8" = 1'-0"

GENERAL NOTES - REFLECTED CEILING PLANS

A	REFER I-101 THROUGH I-109 FOR FINISH PLANS. REFER TO I-601 FOR FINISH SCHEDULE.
B	ALL GYPSUM BOARD AND ACOUSTICAL CEILINGS TO BE 9'-0" ABOVE FINISH FLOOR UNLESS OTHERWISE NOTED.
C	PROVIDE HOLD-DOWN CLIPS AT ALL ACOUSTICAL CEILING TILE WITHIN 10'-0" OF AN EXTERIOR DOOR.
D	MOUNT 1/2" GYPSUM BOARD ON 2" RIGID INSULATION (R-12 MINIMUM) TO UNDERSIDE OF STRUCTURE IN ALL BAY AND STREET SIDE LEVEL 2 AREAS.
E	MINIMUM CLEAR HEIGHT FOR ALL CEILING MOUNTED EQUIPMENT, LIGHT FIXTURES, ETC. IN SHOP SPACES AT THE BAY, CENTER, AND STREET SIDES WILL BE 11'-0" MINIMUM UNLESS OTHERWISE NOTED.
F	MINIMUM CLEAR HEIGHT FOR ALL CEILING MOUNTED EQUIPMENT, LIGHT FIXTURES, ETC. IN ADMIN SPACES AT THE BAY, CENTER, AND STREET SIDES WILL BE 9'-0" MINIMUM UNLESS OTHERWISE NOTED.
G	MINIMUM CLEAR HEIGHT FOR ALL CEILING MOUNTED EQUIPMENT, LIGHT FIXTURES, ETC. IN CORRIDORS AT THE BAY AND STREET SIDES WILL BE 8'-0" MINIMUM UNLESS OTHERWISE NOTED.

KEYNOTES

120	7 1/2 TON TOP RUNNING OVERHEAD BRIDGE CRANE, ABOVE
158	GYPSUM BOARD CEILING CONTROL JOINT; REFER 1/A-511
170	MECHANICAL DUCT AND EQUIPMENT; REFER MECHANICAL
172	EXPOSED STRUCTURE
173	GYPSUM BOARD SOFFIT; REFER 5/A-511
190	1-HOUR RATED GYP BD CEILING.
191	2'-0" X 2'-0" GOVERNOR ACCESS PANEL, SILL AT 10'-0" AFF VERIFY WITH MANUFACTURER.
192	DRAFT CURTAIN ABOVE (TYP); REFER 9/A-511
233	EXISTING STRUCTURE, PAINTED AS-IS
253	STEEL RAILS FOR BRIDGE CRANE; REFER: STRUCTURAL

REFLECTED CEILING PLAN LEGEND

GYPSUM BOARD CEILING AS SCHEDULED.

CONTROL JOINT

ACOUSTICAL CEILING TILE; AS SCHEDULED.

LIGHT FIXTURE; REFER TO ELECTRICAL DRAWINGS.

WALL MOUNTED LIGHT FIXTURE; REFER TO ELECTRICAL DRAWINGS.

EXIT LIGHT FIXTURE; REFER TO ELECTRICAL DRAWINGS.

OCCUPANCY SENSOR; REFER TO ELECTRICAL DRAWINGS.

SUPPLY AIR DIFFUSERS; REFER TO MECHANICAL DRAWINGS.

RETURN AIR DIFFUSER; REFER TO MECHANICAL DRAWINGS.

AIR DIFFUSER; REFER TO MECHANICAL DRAWINGS.

PLAN NORTH

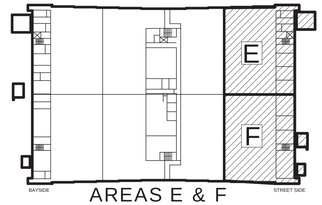

AREAS E & F KEY PLAN

NO.	DATE	DESCRIPTION	SYM	APPR

NAVFAC

REGISTERED ARCHITECT — STEVEN THOMAS — 22853 — 05.15.2015 — STATE OF TEXAS

JACOBS/BURNS & MCDONNELL

JACOBS/BURNS & MCDONNELL, A JOINT VENTURE
155 NORTH LAKE AVENUE
PASADENA, CA 91101 USA
TEL 1 (817) 735-6000
FAX 1 (817) 735-6148

JEG NO. FDWD7911 A/E INFO

APPROVED

FOR COMMANDER NAVFAC 6/11/2015

ACTIVITY

SATISFACTORY TO DATE

DES	CPC	DRW	MTH	CHK	WRP

PM/DM KAD

BRANCH MANAGER PM

CHIEF ENGARCH

FIRE PROTECTION JL

DEPARTMENT OF THE NAVY
NAVFAC PACIFIC
NAVAL FACILITIES ENGINEERING COMMAND – PACIFIC
NAVAL FACILITIES ENGINEERING COMMAND – HICKAM
JOINT BASE PEARL HARBOR
MARINE CORPS BASE HAWAII
KANEOHE, HAWAII

FY14 MCON PROJECT P-863
AIRCRAFT MAINTENANCE HANGAR UPGRADES

REFLECTED CEILING PLAN - LEVEL 2 - AREAS E & F

SCALE AS SHOWN

EPROJECT NO. 862914

CONSTR. CONTR. NO.

NAVFAC DRAWING NO. 19043357

SHEET 92 OF 313

A-126

FINAL DESIGN - 15 MAY 2015

5/12/2015 7:37:39 AM

SCALE(S) AS NOTED ON THIS SHEET ARE BASED ON FULL SIZE ANSI D (22" x 34") SHEET. DRAWFORM REVISION: 10 MARCH 2009

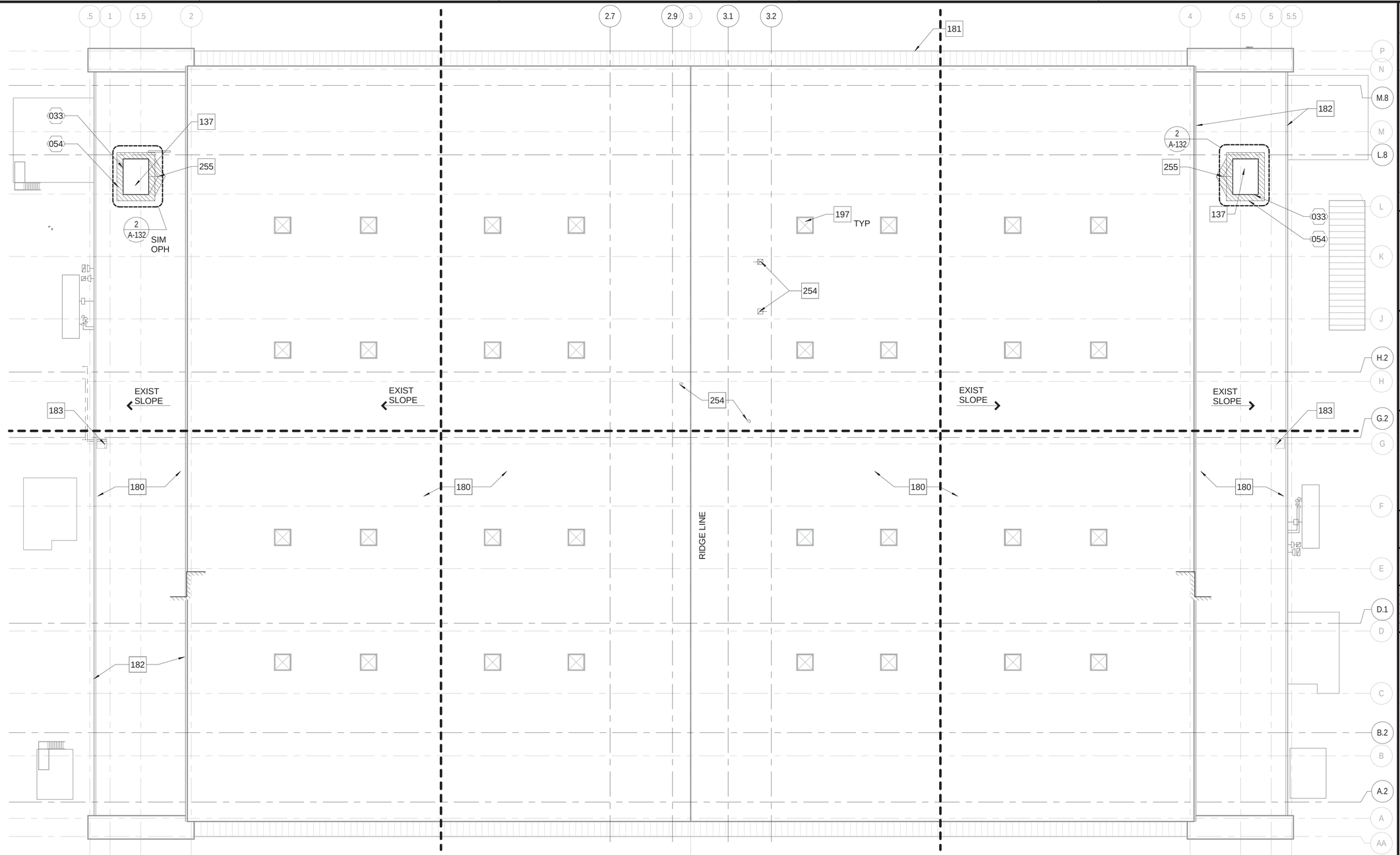

KEYNOTES

033	REMOVE AREA OF EXISTING ROOF & STRUCTURE IN ITS ENTIRETY; REFER: STRUCTURAL
054	AREA OF EXISTING ROOFING SYSTEM TO BE REMOVED AND REPLACED WITH ROOFING SYSTEM TO MATCH EXISTING
137	ROOFING MEMBRANE TO MATCH EXISTING OVER 1/4" PROTECTION BOARD ON 2 LAYERS OF 4" RIGID INSULATION ON CONCRETE STRUCTURE.
180	EXISTING BUILT-UP ROOF TO REMAIN.
181	EXISTING HANGAR DOOR CANOPY AND TIE-RODS TO REMAIN
182	EXISTING GUTTERS AND DOWNSPOUTS TO REMAIN, PAINT
183	EXISTING ROOF ACCESS LADDER TO REMAIN, PAINT
197	EXISTING SKYLIGHTS
254	VENT; REFER: 6/A-132 AND MECHANICAL
255	CRICKET

OVERALL ROOF PLAN
1/16" = 1'-0"
A-131 (1)

0 32
SCALE: 1/16" = 1'-0"

PLAN NORTH

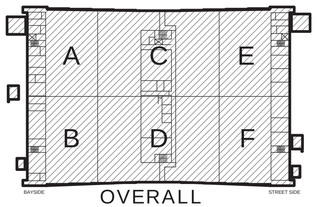

OVERALL KEY PLAN

APPR | DATE | DESCRIPTION | SYM

NAVFAC

REGISTERED ARCHITECT
ANDREW THOMAS MARTIN
5.15.2015
22853
STATE OF TEXAS

JACOBS/BURNS & McDONNELL

JACOBS/BURNS & MCDONNELL, A JOINT VENTURE
155 NORTH LAKE AVENUE
PASADENA, CA 91101 USA
TEL 1 (817) 735-6000
FAX 1 (817) 735-6148

JEG NO. FDWD7911 A/E INFO

APPROVED
FOR COMMANDER NAVFAC 6/11/2015

ACTIVITY

SATISFACTORY TO DATE

DES	CPC	DRW	MTH	CHK	WRP

PMDM
BRANCH MANAGER
CHIEF ENGARCH
FIRE PROTECTION

DEPARTMENT OF THE NAVY
NAVFAC PACIFIC
NAVAL FACILITIES ENGINEERING COMMAND
NAVAL FACILITIES ENGINEERING COMMAND ~ PACIFIC
JOINT BASE PEARL HARBOR - HICKAM
MARINE CORPS BASE HAWAII
KANEOHE, HAWAII
FY14 MCON PROJECT P-863
AIRCRAFT MAINTENANCE HANGAR UPGRADES
OVERALL ROOF PLAN

SCALE	AS SHOWN
EPROJECT NO.	862914
CONSTR. CONTR. NO.	
NAVFAC DRAWING NO.	19043358
SHEET	93 OF 313

A-131

FINAL DESIGN - 15 MAY 2015

SCALE(S) AS NOTED ON THIS SHEET ARE BASED ON FULL SIZE ANSI D (22" x 34") SHEET. DRAWFORM REVISION: 10 MARCH 2009

5/12/2015 7:37:51 AM

GENERAL NOTES - ROOF PLAN

A	PROVIDE SILICONE BASED ELASTOMERIC COATING OVER ALL EXTERIOR CONCRETE SURFACES OF HANGAR.
B	PROVIDE OSHA COMPLIANT FALL RESTRAINT SYSTEM FOR ROOF ACCESS AND MAINTENANCE

KEYNOTES

033	REMOVE AREA OF EXISTING ROOF & STRUCTURE IN ITS ENTIRETY; REFER: STRUCTURAL
040	EXISTING STEEL STRUCTURE AND FOUNDATION TO REMAIN, PROTECT DURING CONSTRUCTION
054	AREA OF EXISTING ROOFING SYSTEM TO BE REMOVED AND REPLACED WITH ROOFING SYSTEM TO MATCH EXISTING
118	MECHANICAL EQUIPMENT; REFER MECHANICAL
121	BUILDING EXPANSION JOINT AND COVER, REFER: 4/A-132
182	EXISTING GUTTERS AND DOWNSPOUTS TO REMAIN, PAINT
192	DRAFT CURTAIN ABOVE (TYP); REFER 9/A-511
195	3'-0" X 3'-0" ROOF HATCH, REFER 3/A-132
252	OUTLINE OF ELEVATOR OVER RUN CAP
255	CRICKET
309	1-HOUR RATED, 4-1/2" CONCRETE ON 2" METAL DECK ROOF DECK (PER UL DESIGN NO. D503)

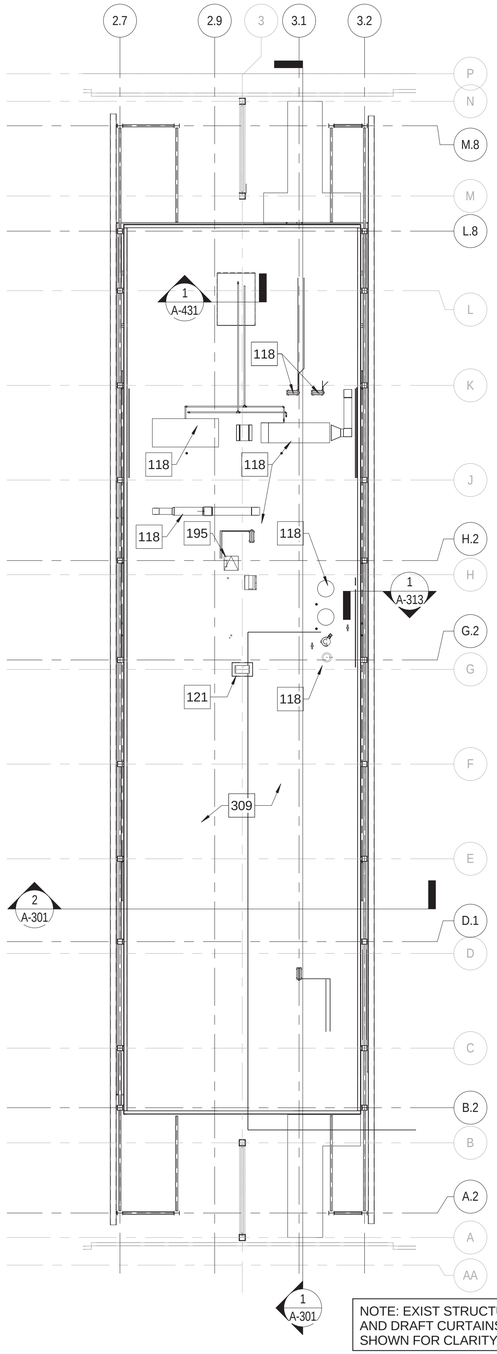

NOTE: EXIST STRUCTURE AND DRAFT CURTAINS NOT SHOWN FOR CLARITY

MECHANICAL PLATFORM PLAN
1/16" = 1'-0"
A-132 (1)

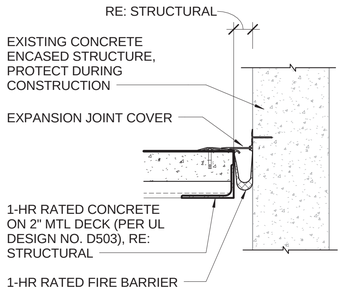

EJ COVER DETAIL
1 1/2" = 1'-0"
A-132 (4)

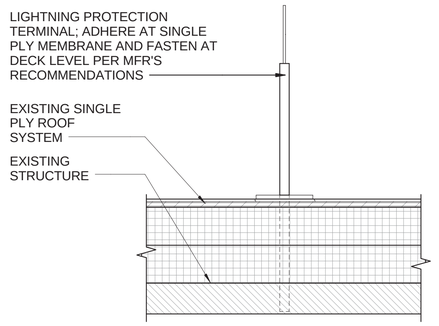

LIGHTNING PROTECTION DETAIL
1 1/2" = 1'-0"
A-131, A-201 (5)

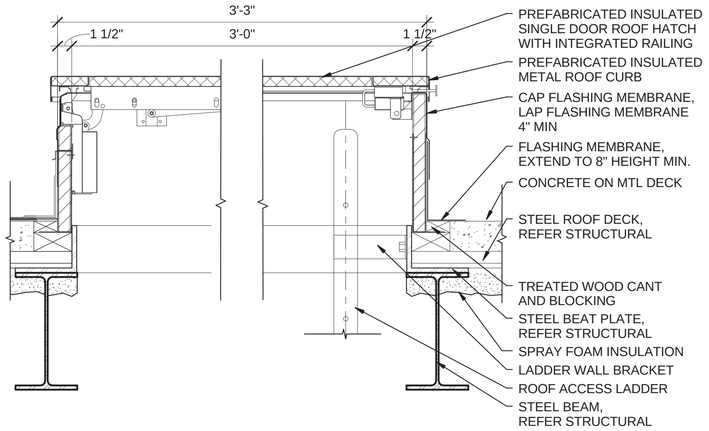

TYPICAL ROOF ACCESS HATCH
1 1/2" = 1'-0"
A-132 (3)

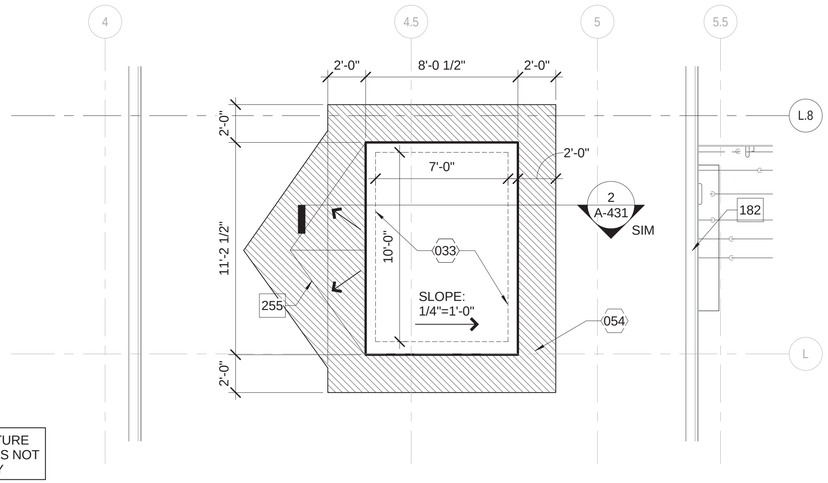

ENLARGED ELEVATOR ROOF PLAN
1/4" = 1'-0"
A-131 (2)

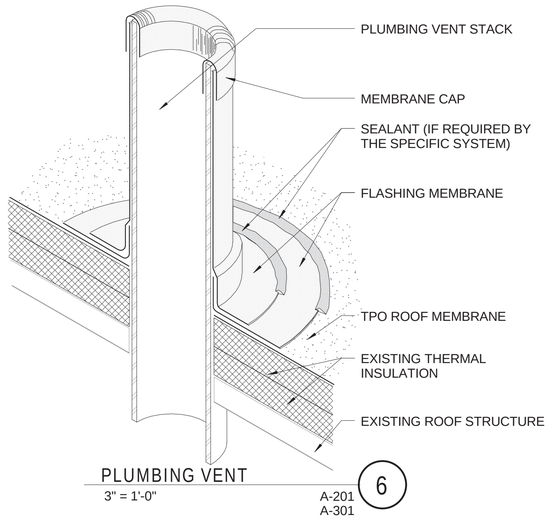

PLUMBING VENT
3" = 1'-0"
A-201, A-301 (6)

4 3 2 1 0 4 8
SCALE: 1/4"=1'-0"

1 0 1
SCALE: 1 1/2"=1'-0"

0 32
SCALE: 1/16" = 1'-0"

PLAN NORTH

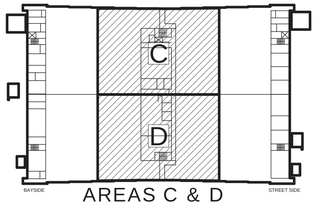

AREAS C & D
KEY PLAN

DES	CPC	DRW	MTH
CHK	WRP		

PMDM
BRANCH MANAGER
CHIEF ENGARCH
FIRE PROTECTION

NAVAL FACILITIES ENGINEERING COMMAND – PACIFIC
JOINT BASE PEARL HARBOR – HICKAM
DEPARTMENT OF THE NAVY
NAVFAC PACIFIC
MARINE CORPS BASE HAWAII
KANEOHE, HAWAII
FY14 MCON PROJECT P-863
AIRCRAFT MAINTENANCE HANGAR UPGRADES
ENLARGED ROOF PLANS - AREAS C & D AND DETAILS

JACOBS/BURNS & McDONNELL
JACOBS/BURNS & MCDONNELL, A JOINT VENTURE
155 NORTH LAKE AVENUE
PASADENA, CA 91101 USA
TEL 1 (817) 735-6000
FAX 1 (817) 735-6148

JEG NO. FDWD7911 A/E INFO

APPROVED
FOR COMMANDER NAVFAC 6/11/2015

ACTIVITY

SATISFACTORY TO DATE

SCALE	AS SHOWN
EPROJECT NO.	862914
CONSTR. CONTR. NO.	
NAVFAC DRAWING NO.	19043359
SHEET	94 OF 313

A-132

APPR | DATE | DESCRIPTION | SYM

5/12/2015 7:38:03 AM

SCALE(S) AS NOTED ON THIS SHEET ARE BASED ON FULL SIZE ANSI D (22" x 34") SHEET. DRAWFORM REVISION: 10 MARCH 2009

FINAL DESIGN - 15 MAY 2015

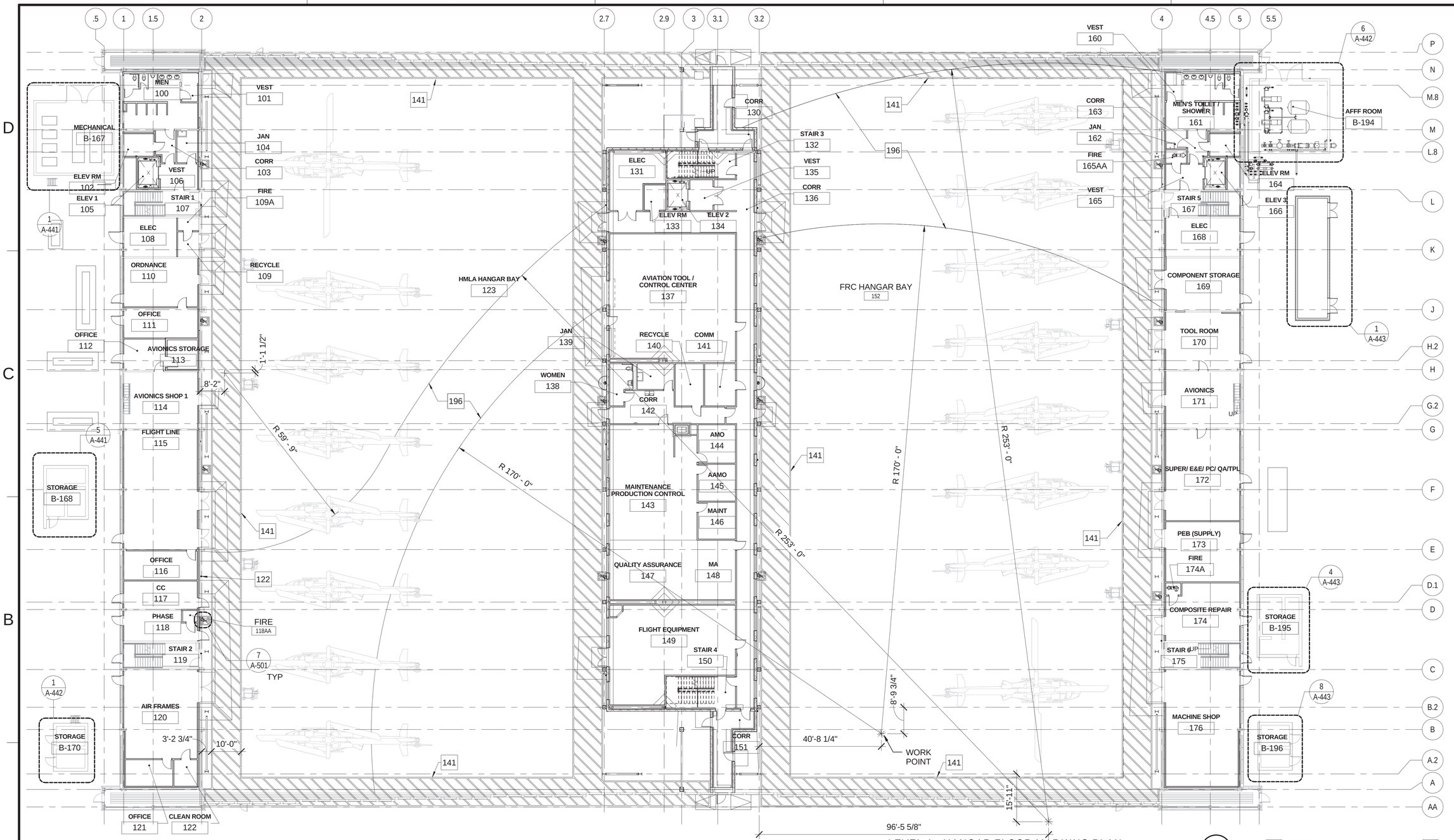

LEVEL 1 - HANGAR FLOOR MARKING PLAN

1/16" = 1'-0"

KEYNOTES

122	BRACKET MOUNTED 20LB , 20A: 120B: C FIRE EXTINGUISHER (TYP. IN HANGAR BAY)
141	HANGAR DOOR FIRE LANE; BORDERED AT EACH SIDE WITH FIRE LANE STRIPE, REFER: 6/A-501; WITH ALTERNATING 4" WIDE RED PAINTED STRIPES
196	BOUNDARY OF HISTORIC SWATH, REFER: INTERIORS

GENERAL NOTES - HANGAR FLOOR MARKINGS PLAN

A	HANGAR FLOOR TO RECEIVE LIGHT REFLECTIVE NONFERROUS METALLIC AGGREGATE FLOOR COATING
B	LOCATIONS OF SAFETY MARKINGS FOR SUSPENDED EQUIPMENT TO BE DETERMINED AFTER INSTALLATION OF EQUIPMENT
C	REFER TO ELECTRICAL DRAWINGS FOR LOCATIONS OF GROUNDING POINTS. RE: DTL 8/A-501 FOR DETAIL OF FLOOR MARKINGS AT GROUNDING POINTS

PLAN NORTH

0' 8' 16' 32' 64'

SCALE: 3/64" = 1' - 0"

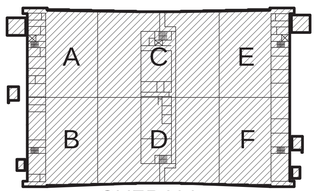

OVERALL KEY PLAN

1

APPR | DATE | DESCRIPTION | SYM

NAVFAC

REGISTERED ARCHITECT EVAN THOMAS MINZE 6-15-2015 22853 STATE OF TEXAS

JACOBS/ Burns & McDonnell

JACOBS/BURNS & MCDONNELL, A JOINT VENTURE
155 NORTH LAKE AVENUE
PASADENA, CA 91101 USA
TEL 1 (817) 735-6000
FAX 1 (817) 735-6148

JEG NO. FDWD7911 A/E INFO

APPROVED
Evan Minze
FOR COMMANDER NAVFAC 6/11/2015

ACTIVITY

SATISFACTORY TO DATE

DES	CPC	DRW	MTH	CHK	WRP
PMDM					KAD
BRANCH MANAGER					
CHIEF ENGARCH					
FIRE PROTECTION					

DEPARTMENT OF THE NAVY
NAVFAC PACIFIC
NAVAL FACILITIES ENGINEERING COMMAND – PACIFIC
NAVAL FACILITIES ENGINEERING COMMAND
JOINT BASE PEARL HARBOR - HICKAM
MARINE CORPS BASE HAWAII
KANEOHE, HAWAII
FY14 MCON PROJECT P-863
AIRCRAFT MAINTENANCE HANGAR UPGRADES
HANGAR FLOOR MARKINGS PLAN

SCALE	AS SHOWN
EPROJECT NO.	862914
CONSTR. CONTR. NO.	
NAVFAC DRAWING NO.	19043360
SHEET	95 OF 313

A-141

5/12/2015 7:38:19 AM

SCALE(S) AS NOTED ON THIS SHEET ARE BASED ON FULL SIZE ANSI D (22 x 34) SHEET. DRAWFORM REVISION: 10 MARCH 2009

FINAL DESIGN - 15 MAY 2015

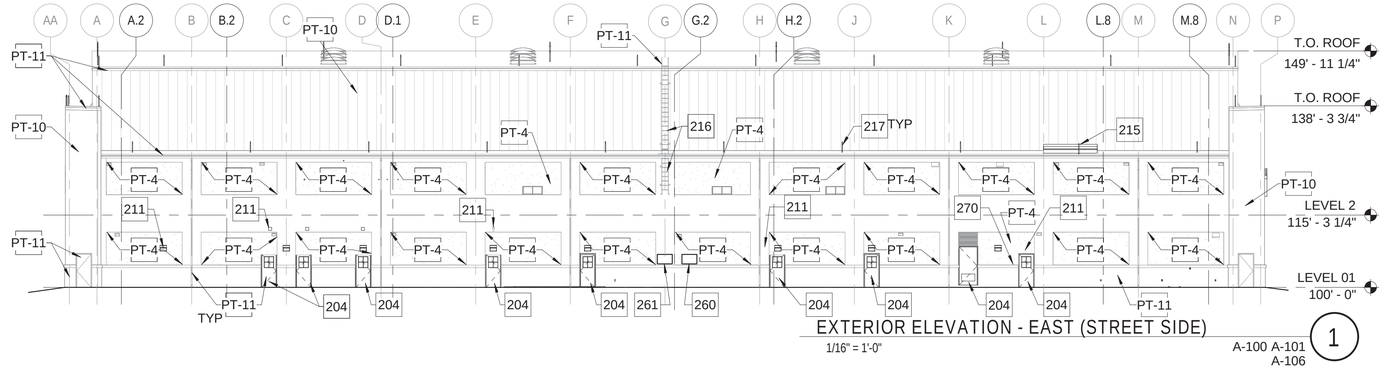

EXTERIOR ELEVATION - EAST (STREET SIDE)

1/16" = 1'-0"

A-100 A-101 A-106

1

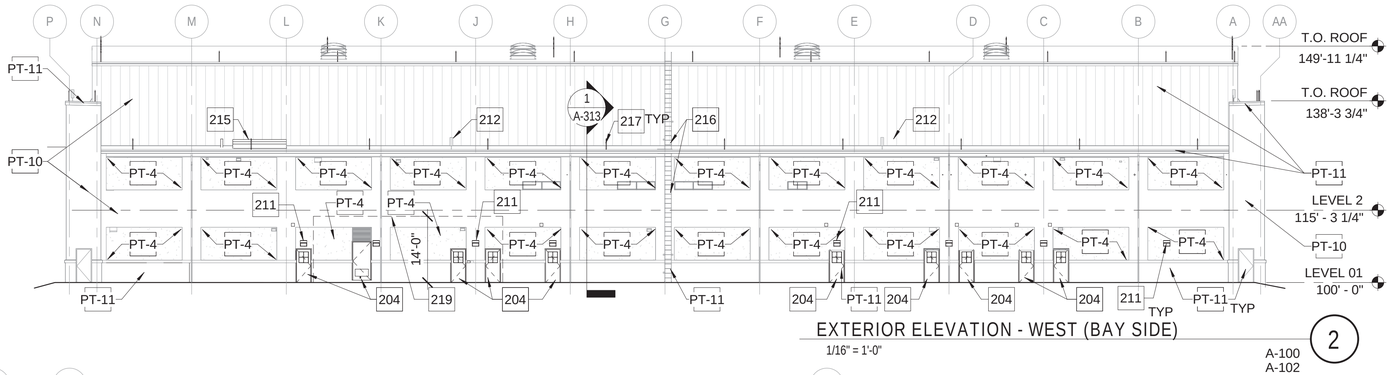

EXTERIOR ELEVATION - WEST (BAY SIDE)

1/16" = 1'-0"

A-100 A-102

2

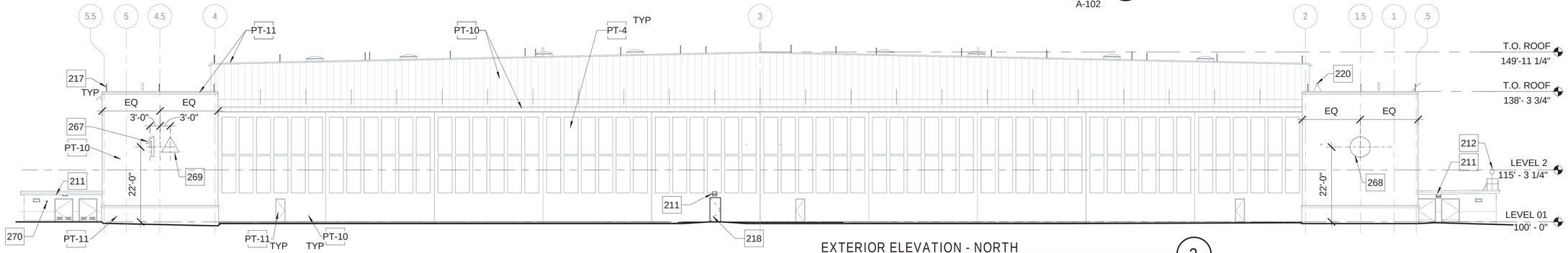

EXTERIOR ELEVATION - NORTH

1/16" = 1'-0"

A-100 A-103

3

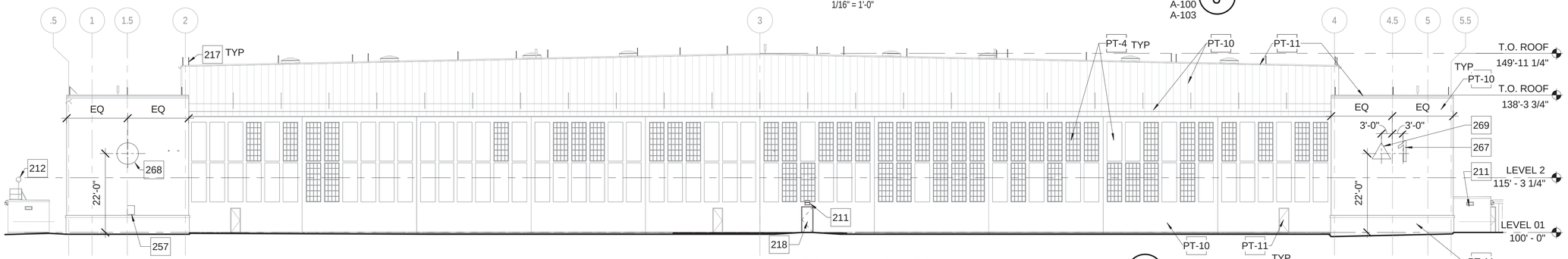

EXTERIOR ELEVATION - SOUTH

1/16" = 1'-0"

A-100

4

0 32

SCALE: 1/16" = 1'-0"

KEYNOTES

204	DOORS TO MATCH HISTORIC DOORS
211	LIGHT FIXTURE; REFER ELECTRICAL
212	EXISTING SPOT LIGHT TO REMAIN
215	NEW ELEVATOR OVERRUN
216	EXISTING ACCESS LADDER TO REMAIN
217	LIGHTNING PROTECTION SYSTEM; REFER 5/A-132 AND ELECTRICAL
218	HOLLOW METAL DOOR TO MATCH EXISTING DOORS AT HANGAR
219	12" CMU SCREEN WALL
220	EXISTING CAMERA TO REMAIN
257	HISTORIC MARKER TO REMAIN
260	INTERPRETATIVE SIGNAGE, REFER TO INTERIORS
261	HISTORIC COLOR WINDOW SIGNAGE, REFER TO INTERIORS
267	LOCATION OF BUILDING NUMBER EXTERIOR BUILDING SIGNAGE, REFER TO INTERIORS 1/I-302
268	LOCATION OF HMLA EXTERIOR BUILDING SIGNAGE, REFER TO INTERIORS 11/I-301
269	LOCATION OF FRC EXTERIOR BUILDING SIGNAGE, REFER TO INTERIORS 10/I-301
270	EXTERIOR SEMI-RECESSED KNOX BOX SERIES #3275; MOUNT AT 6'-0" AFF

EXTERIOR FINISH LEGEND

PT-4	AREA OF HISTORIC WINDOW INFILL AND HISTORIC GLAZING AT HANGAR DOORS, PAINT TO MATCH SW6206 OYSTER BAY BY SHERWIN WILLLIAMS
PT-10	PRIMARY COLOR - PAINT TO MATCH FED SPEC#: 23578
PT-11	WAINSCOAT/TRIM COLOR - PAINT TO MATCH FED SPEC#: 20219

APPR	DATE	DESCRIPTION	SYM

NAVFAC

REGISTERED ARCHITECT EVAN THOMAS MINZE 22853 STATE OF TEXAS 6.15.2015

JACOBS/ Burns & McDonnell

JACOBS/BURNS & MCDONNELL, A JOINT VENTURE
155 NORTH LAKE AVENUE
PASADENA, CA 91101 USA
TEL 1 (817) 735-6000
FAX 1 (817) 735-6148

JEG NO. FDWD7911 A/E INFO

APPROVED

Evan Minze

FOR COMMANDER NAVFAC 6/11/2015

ACTIVITY

SATISFACTORY TO DATE

DES	CPC	DRW	MTH	CHK	WRP

PMDM KAD

BRANCH MANAGER JM

CHIEF ENGARCH

FIRE PROTECTION JL

DEPARTMENT OF THE NAVY
NAVFAC PACIFIC
NAVAL FACILITIES ENGINEERING COMMAND – PACIFIC
NAVAL FACILITIES ENGINEERING COMMAND
MARINE CORPS BASE HAWAII
JOINT BASE PEARL HARBOR - HICKAM
KANEOHE, HAWAII

FY14 MCON PROJECT P-863
AIRCRAFT MAINTENANCE HANGAR UPGRADES

EXTERIOR ELEVATIONS

SCALE AS SHOWN

EPROJECT NO. 862914

CONSTR. CONTR. NO.

NAVFAC DRAWING NO. 19043361

SHEET 96 OF 313

A-201

FINAL DESIGN - 15 MAY 2015

5/12/2015 7:38:55 AM

SCALE(S) AS NOTED ON THIS SHEET ARE BASED ON FULL SIZE ANSI D (22" x 34") SHEET. DRAWFORM REVISION: 10 MARCH 2009

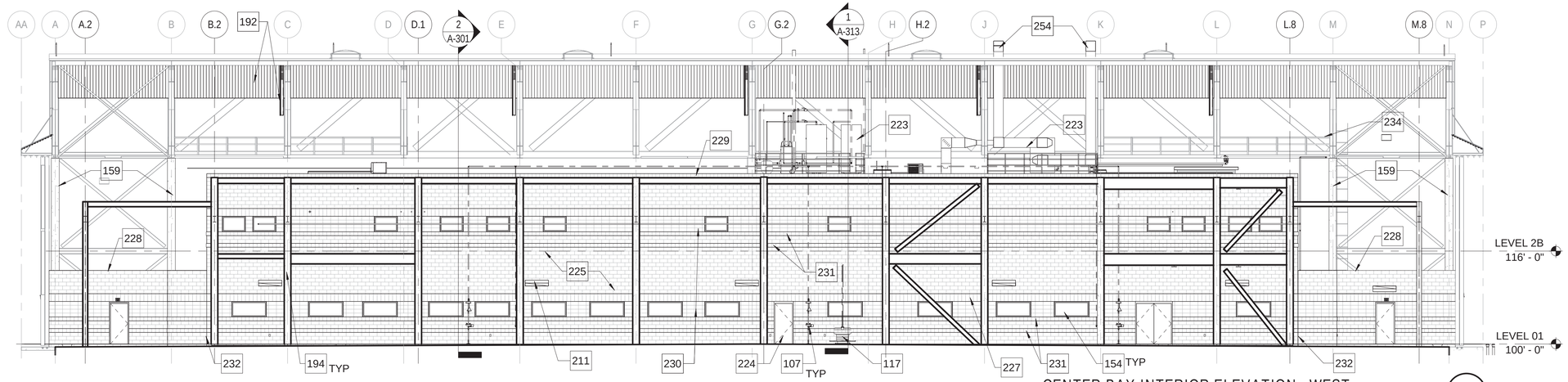

CENTER BAY INTERIOR ELEVATION - WEST

3/32" = 1'-0"

A-104 (1)

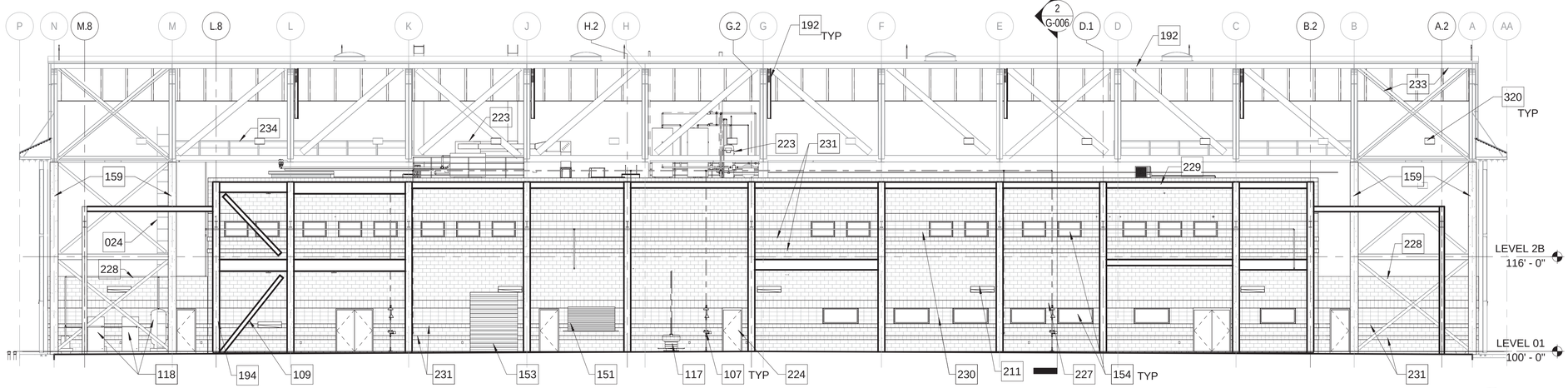

CENTER BAY INTERIOR ELEVATION - EAST

3/32" = 1'-0"

A-100 A-104 (2)

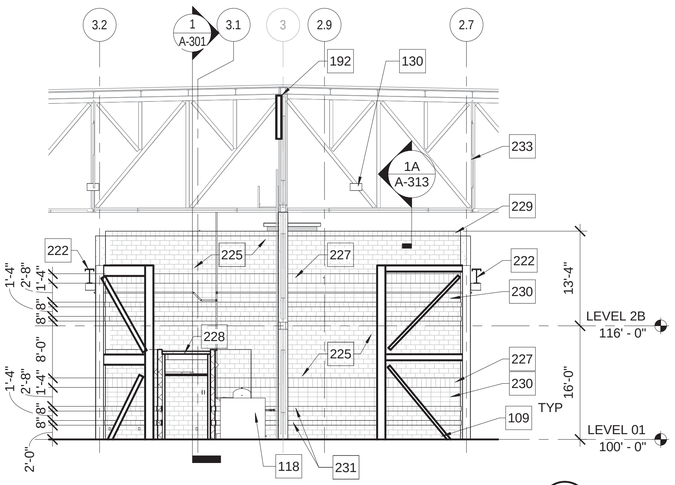

ELEVATION

3/32" = 1'-0"

A-100 A-108 A-103 (3)

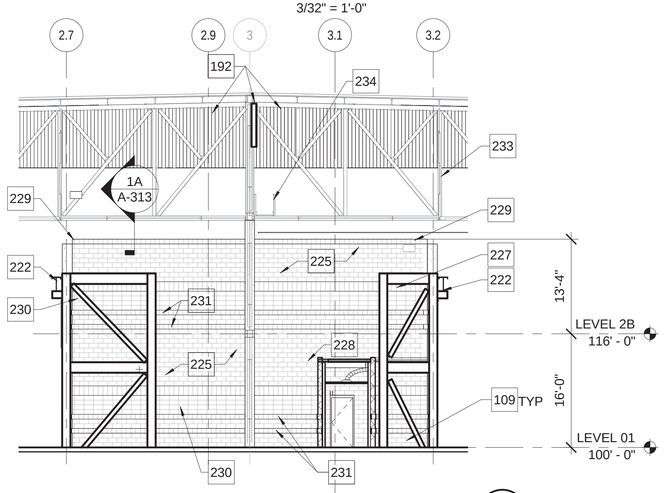

CENTERBAY INTERIOR ELEVATION - NORTH

3/32" = 1'-0"

A-100 A-108 A-104 (4)

SCALE: 3/32" = 1'-0"

GENERAL NOTES - ELEVATIONS

A	BRIDGE CRANES HIDDEN FOR CLARITY
B	REFER TO A-611 FOR DOOR TYPES.
C	REFER TO I-601 FOR FINISH SCHEDULE.
D	ALL EXTERIOR DOORS TO BE HOT-DIPPED GALVANIZED AND PAINTED. UNLESS OTHERWISE NOTED
E	REFER TO I-201, I-202, AND I-203 FOR PAINT SCHEME AT INTERIOR ELEVATIONS

KEYNOTES

024	REMOVE EXISTING LADDER
107	EMERGENCY SHOWER WITH EYEWASH; REFER PLUMBING
109	STRUCTURAL CROSS BRACING; REFER STRUCTURAL FRAMING PLANS (TYP)
117	PLUMBING FIXTURE; REFER PLUMBING
118	MECHANICAL EQUIPMENT; REFER MECHANICAL
130	ELECTRICAL EQUIPMENT; REFER ELECTRICAL
151	INSULATED COILING DOOR AND COUNTER
153	INSULATED OVERHEAD DOOR
154	1-HR RATED STEEL FRAMED WINDOWS AS SCHEDULED, TYP.
159	WRAP EXISTING COLUMN WITH A 1-HOUR RATED TROWEL APPLIED CEMENTITIOUS FIRE PROOFING AND METAL LATH UP TO UNDERSIDE OF TRUSS ABOVE. (UL DESIGN NO. X746)
192	DRAFT CURTAIN ABOVE (TYP); REFER 9/A-511
194	WRAP STEEL COLUMN UP TO UNDERSIDE OF STRUCTURE OR BOTTOM OF TRUSS WITH A 1-HOUR RATED TROWEL APPLIED CEMENTITIOUS FIRE PROOFING AND METAL LATH PARTITION. (UL DESIGN NO. X746)
211	LIGHT FIXTURE; REFER ELECTRICAL
222	7 1/2 TON TOP RUNNING OVERHEAD BRIDGE CRANE
223	MECHANICAL EQUIPMENT, REFER MECHANICAL
224	INSULATED HOLLOW METAL DOOR, PAINTED
225	CMU WALL, PAINTED
227	8 X 16 X 8 BOND BEAM
228	1-HOUR RATED, 4-1/2" CONCRETE ON 2" METAL DECK ROOF DECK (PER UL DESIGN NO. D503)
229	SCORED CMU ACCENT BAND
230	BURNISHED BLOCK WITH FLUSH JOINT; PAINTED
231	SCORED CMU ACCENT BAND OFFSET 1"
232	MASONRY CONTROL JOINT
233	EXISTING STRUCTURE, PAINTED AS-IS
234	EXISTING CATWALK
254	VENT; REFER: 6/A-132 AND MECHANICAL
320	ELECTRICAL EQUIPMENT; REFER ELECTRICAL

DEDUCTIVE ITEM #2:

PROVIDE STANDARD RUNNING BOND 1-HOUR RATED 8" CMU WALL AT CENTER BAY WALLS.

APPR | DATE | DESCRIPTION | SYM

NAVFAC

REGISTERED ARCHITECT MATTHEW THOMAS PERRY 22853 STATE OF TEXAS 05-15-2015

JACOBS/Burns & McDonnell

JACOBS/BURNS & MCDONNELL, A JOINT VENTURE
155 NORTH LAKE AVENUE
PASADENA, CA 91101 USA
TEL 1 (617) 735-6000
FAX 1 (617) 735-6148

JEG NO. FSW57911 | A/E INFO

APPROVED
FOR COMMANDER NAVFAC 6/11/2015

ACTIVITY

SATISFACTORY TO DATE

DES	CPC	DRW	MTH	CHK	WRP

PMDM KAP
BRANCH MANAGER JM
CHIEF ENGARCH
FIRE PROTECTION JC

DEPARTMENT OF THE NAVY
NAVFAC PACIFIC
NAVAL FACILITIES ENGINEERING COMMAND – PACIFIC
JOINT BASE PEARL HARBOR - HICKAM
MARINE CORPS BASE HAWAII
KANEOHE, HAWAII
FY14 MCON PROJECT P-863
AIRCRAFT MAINTENANCE HANGAR UPGRADES
INTERIOR ELEVATIONS

SCALE AS SHOWN
EPROJECT NO. 862914
CONSTR. CONTR. NO.
NAVFAC DRAWING NO. 19043362
SHEET 97 OF 313

A-210

FINAL DESIGN - 15 MAY 2015

5/12/2015 7:39:37 AM

SCALE(S) AS NOTED ON THIS SHEET ARE BASED ON FULL SIZE ANSI D (22" x 34") SHEET. DRAWFORM REVISION: 10 MARCH 2009

KEYNOTES

011	EXISTING HISTORIC FIRE HOSE CABINET TO REMAIN, PROTECT DURING CONSTRUCTION.
016	EXISTING DOOR TO BE NON-OPERABLE AND REMAIN IN CLOSED POSITION
109	STRUCTURAL CROSS BRACING; REFER STRUCTURAL FRAMING PLANS (TYP)
116	TRENCH DRAIN, REFER STRUCTURAL, FIRE PROTECTION, AND PLUMBING (TYP)
131	STEEL COLUMN FOR BRIDGE CRANE, REFER: STRUCTURAL
192	DRAFT CURTAIN ABOVE (TYP); REFER 9/A-511
202	INTERIOR FACE OF EXISTING METAL WALL PANELS, PAINTED AS-IS
211	LIGHT FIXTURE; REFER ELECTRICAL

KEYNOTES

217	LIGHTNING PROTECTION SYSTEM; REFER 5/A-132 AND ELECTRICAL
218	HOLLOW METAL DOOR TO MATCH EXISTING DOORS AT HANGAR
224	INSULATED HOLLOW METAL DOOR, PAINTED
233	EXISTING STRUCTURE, PAINTED AS-IS
235	WAINSCOT, PAINTED
237	INSULATED GLASS ALUMINUM STOREFRONT SYSTEM
239	EXISTING FIRE HOSE CABINET. PROTECT DURING CONSTRUCTION
242	EXISTING HOIST BEAM AND SUPPORT CABLE TO REMAIN
243	EXISTING PLASTER WALL TO REMAIN, PAINT
244	EXISTING CONCRETE WALL TO REMAIN, PAINT
245	EXISTING GYPSUM BOARD PARTITION, PAINT
246	EXISTING DOOR, PAINT
247	EXPOSED EXISTING STEEL FRAME WINDOW SYSTEM, PAINT
256	HISTORIC GUARD RAIL IN FRONT OF WALL.
266	LOCATION OF EXISTING STEEL SASH WINDOW SYSTEM EMBEDDED IN EXISTING WALL
301	EXISTING ROOF TO REMAIN

GENERAL NOTES - ELEVATIONS

A	BRIDGE CRANES HIDDEN FOR CLARITY
B	REFER TO A-611 FOR DOOR TYPES.
C	REFER TO I-601 FOR FINISH SCHEDULE.
D	ALL EXTERIOR DOORS TO BE HOT-DIPPED GALVANIZED AND PAINTED. UNLESS OTHERWISE NOTED
E	REFER TO I-201, I-202, AND I-203 FOR PAINT SCHEME AT INTERIOR ELEVATIONS

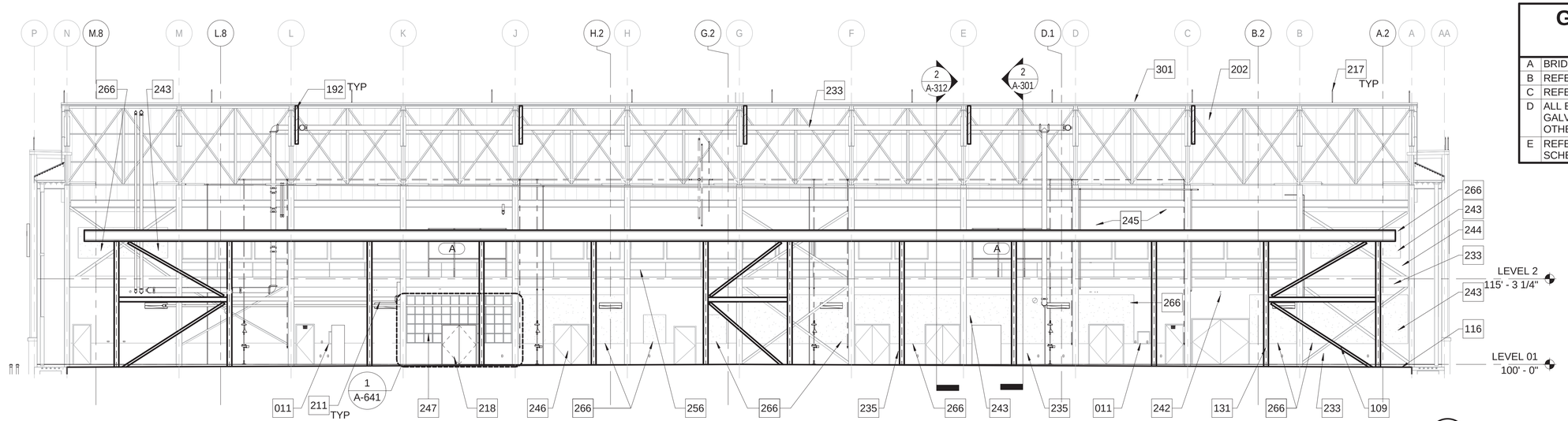

INTERIOR ELEVATION - HANGAR STREET SIDE 1
3/32" = 1'-0" A-106, A-100

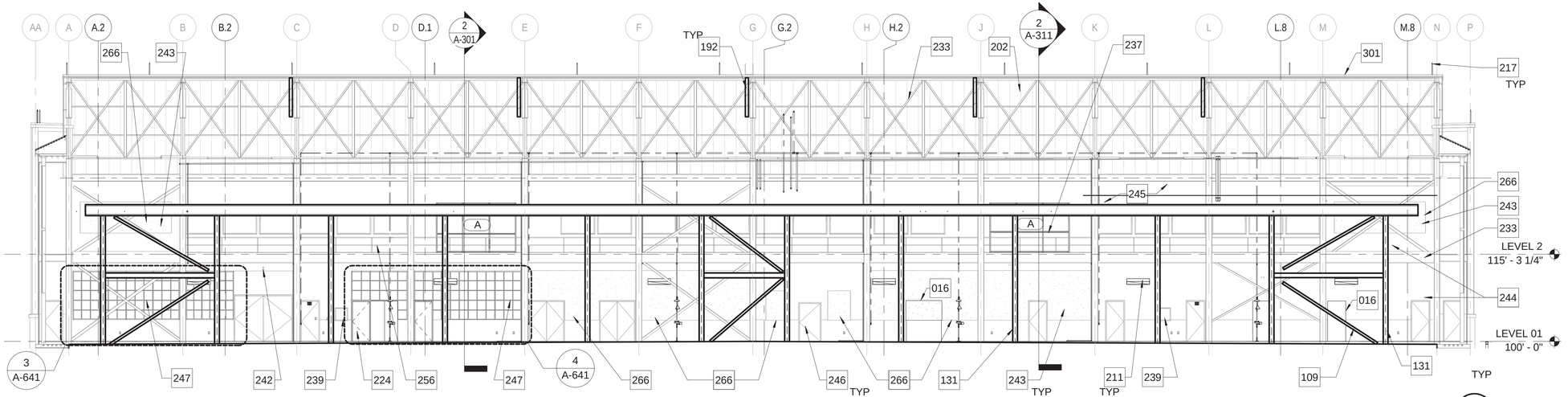

INTERIOR ELEVATION - HANGAR BAY SIDE 2
3/32" = 1'-0" A-102, A-100

0 24
SCALE: 3/32" = 1'-0"

			APPR
			DATE
			DESCRIPTION
			SYM

NAVFAC

REGISTERED ARCHITECT ANDREW THORNLEY 22853 STATE OF TEXAS 05-15-2015

JACOBS/BURNS & MCDONNELL

JACOBS/BURNS & MCDONNELL, A JOINT VENTURE
155 NORTH LAKE AVENUE
PASADENA, CA 91101 USA
TEL 1 (817) 735-6000
FAX 1 (817) 735-6148

JEG NO. FGW07911 A/E INFO

APPROVED
FOR COMMANDER NAVFAC 6/11/2015

ACTIVITY

SATISFACTORY TO DATE

DES	CPC	DRW	MTH	CHK	WRP

PMDM KAD
BRANCH MANAGER
CHIEF ENGARCH
FIRE PROTECTION

DEPARTMENT OF THE NAVY
NAVFAC PACIFIC
NAVAL FACILITIES ENGINEERING COMMAND ~ PACIFIC
JOINT BASE PEARL HARBOR - HICKAM
MARINE CORPS BASE HAWAII
KANEOHE, HAWAII
FY14 MCON PROJECT P-863
AIRCRAFT MAINTENANCE HANGAR UPGRADES
INTERIOR ELEVATIONS

SCALE AS SHOWN
EPROJECT NO. 862914
CONSTR. CONTR. NO.
NAVFAC DRAWING NO. 19043363
SHEET 98 OF 313

A-211

FINAL DESIGN - 15 MAY 2015

5/12/2015 7:40:18 AM

SCALE(S) AS NOTED ON THIS SHEET ARE BASED ON FULL SIZE ANSI D (22 x 34) SHEET. DRAWFORM REVISION: 10 MARCH 2009

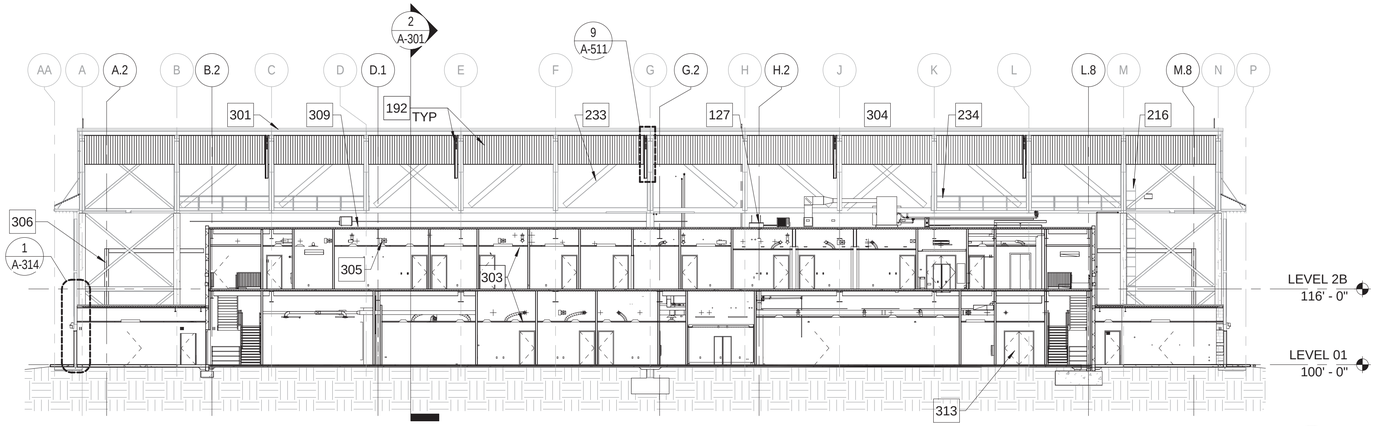

BUILDING SECTION

1/16" = 1'-0"

A-100 A-108 A-210 A-421
A-104 A-132 A-301

1

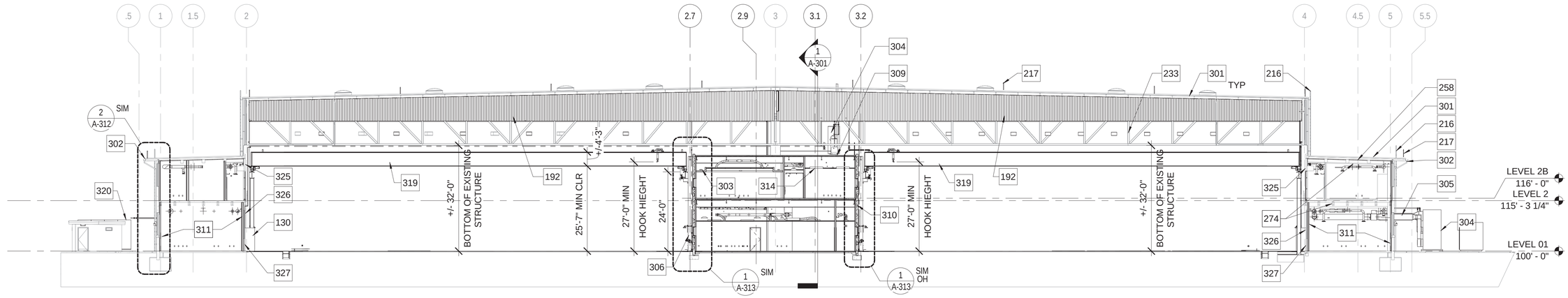

BUILDING SECTION

1/16" = 1'-0"

A-100 A-104 A-107 A-132 A-211
A-102 A-106 A-109 A-210 A-301

2

0 32

SCALE: 1/16" = 1'-0"

KEYNOTES

127	3' X 3' ROOF HATCH
130	ELECTRICAL EQUIPMENT; REFER ELECTRICAL
151	INSULATED COILING DOOR AND COUNTER
153	INSULATED OVERHEAD DOOR
154	1-HR RATED STEEL FRAMED WINDOWS AS SCHEDULED, TYP.
192	DRAFT CURTAIN ABOVE (TYP); REFER 9/A-511
216	EXISTING ACCESS LADDER TO REMAIN
217	LIGHTNING PROTECTION SYSTEM; REFER 5/A-132 AND ELECTRICAL
233	EXISTING STRUCTURE, PAINTED AS-IS
234	EXISTING CATWALK
258	1/2" GYPSUM BOARD ON 2" RIGID INSULATION (R-12 MINIMUM) MOUNTED TO UNDERSIDE OF STRUCTURE.
274	EXISTING STRUCTURE, CLEAN AND PREPARE FOR PAINT.
301	EXISTING ROOF TO REMAIN
302	EXISTING GUTTER AND DOWNSPOUT, PAINT (TYP)
303	CEILING AS SCHEDULED
304	MECHANICAL EQUIPMENT; REFER MECHANICAL
305	MECHANICAL DUCTWORK; REFER MECHANICAL
306	STEEL COLUMN; REFER STRUCTURAL
309	1-HOUR RATED, 4-1/2" CONCRETE ON 2" METAL DECK ROOF DECK (PER UL DESIGN NO. D503)
310	8" 1-HR RATED CMU PARTITION
311	NEW PARTITION, RE; ARCHITECTURAL FLOOR PLANS
313	HOLLOW METAL DOOR, PAINTED (TYP); RE: A-611
314	LIGHT FIXTURE; REFER ELECTRICAL
316	STEEL STRUCTURE, REFER STRUCTURAL
319	7 1/2 TON TOP RUNNING OVERHEAD BRIDGE CRANE
320	ELECTRICAL EQUIPMENT; REFER ELECTRICAL
325	EXISTING 1-HR RATED GYPSUM BOARD PARTITION, UL# U419, PROTECT DURING CONSTRUCTION
326	EXISTING 1-HR RATED PLASTER PARTITION PARTITION, UL# U413, PROTECT DURING CONSTRUCTION
327	EXISTING CAST IN PLACE CONCRETE WALL, PROTECT DURING CONSTRUCTION

APPR	DATE	DESCRIPTION	SYM

NAVFAC

REGISTERED ARCHITECT
MATTHEW THORNBERRY
5-15-2016
22853
STATE OF TEXAS

JACOBS/ Burns & McDonnell

JACOBS/BURNS & MCDONNELL, A JOINT VENTURE
155 NORTH LAKE AVENUE
PASADENA, CA 91101 USA
TEL 1 (817) 735-6000
FAX 1 (817) 735-6148

JEG NO. FDWD7911 A/E INFO

APPROVED
FOR COMMANDER NAVFAC 6/11/2015

ACTIVITY

SATISFACTORY TO DATE

DES	CPC	DRW	MTH	CHK	WRP

PMDM
BRANCH MANAGER
CHIEF ENGARCH
FIRE PROTECTION

NAVAL FACILITIES ENGINEERING COMMAND
DEPARTMENT OF THE NAVY
NAVFAC PACIFIC
NAVAL FACILITIES ENGINEERING COMMAND – PACIFIC
JOINT BASE PEARL HARBOR – HICKAM
MARINE CORPS BASE HAWAII
KANEOHE, HAWAII
FY14 MCON PROJECT P-863
AIRCRAFT MAINTENANCE HANGAR UPGRADES
BUILDING SECTIONS

SCALE	AS SHOWN
EPROJECT NO.	862914
CONSTR. CONTR. NO.	
NAVFAC DRAWING NO.	19043364
SHEET	99 OF 313

A-301

5/12/2015 7:40:54 AM

SCALE(S) AS NOTED ON THIS SHEET ARE BASED ON FULL SIZE ANSI D (22" x 34") SHEET. DRAWFORM REVISION: 10 MARCH 2009

FINAL DESIGN - 15 MAY 2015

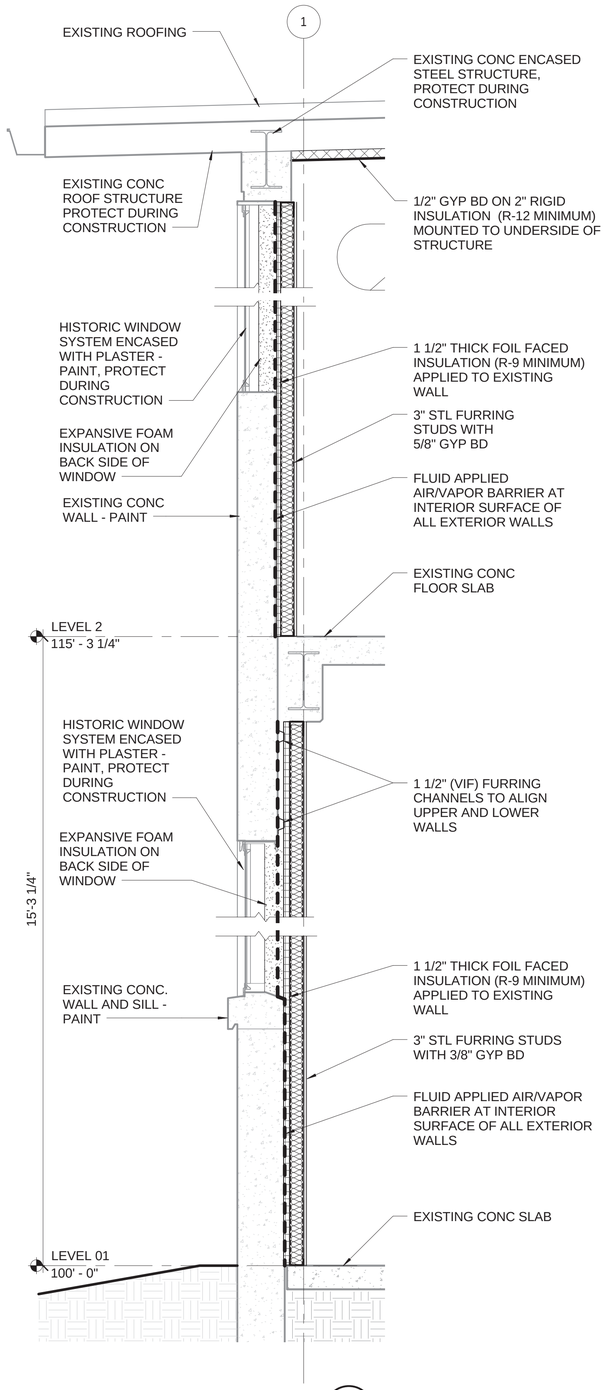

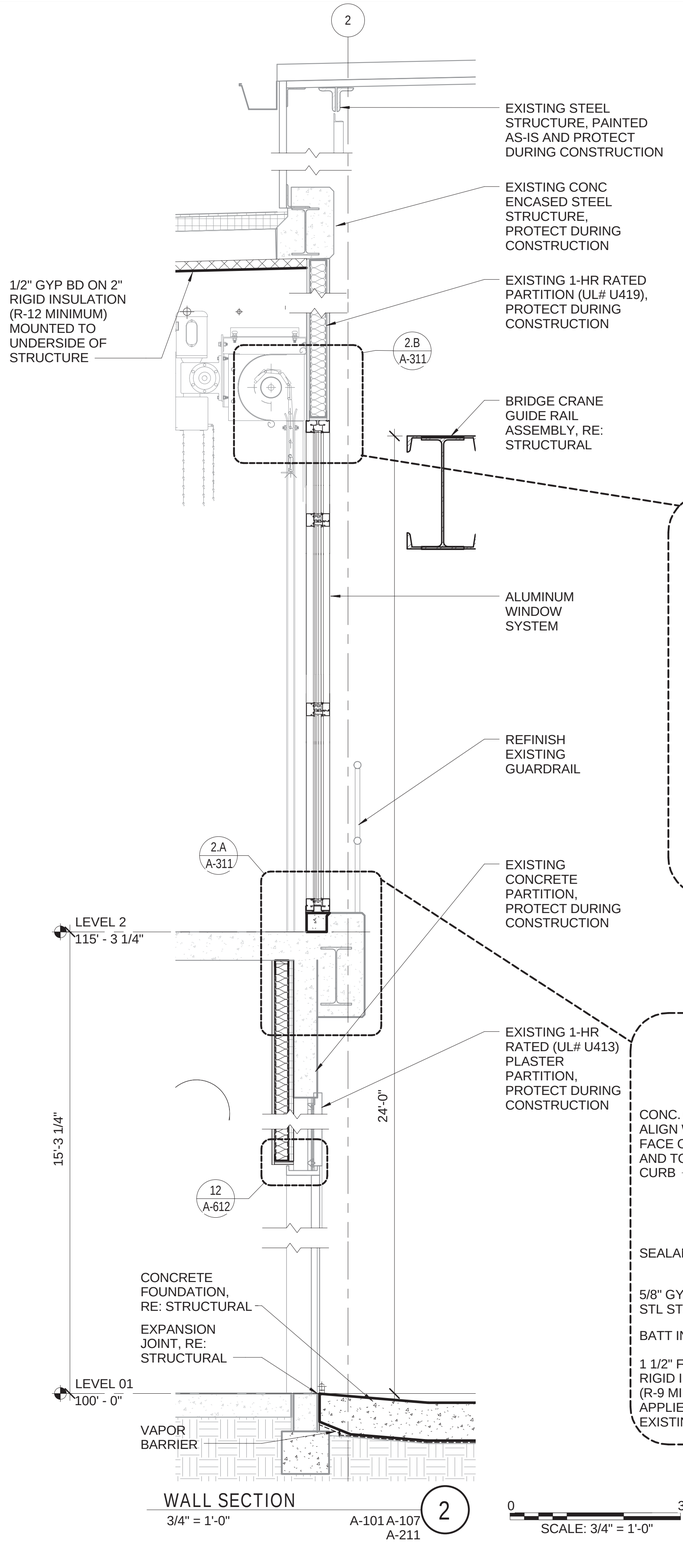

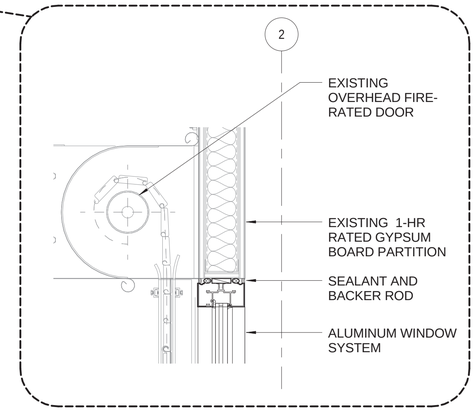

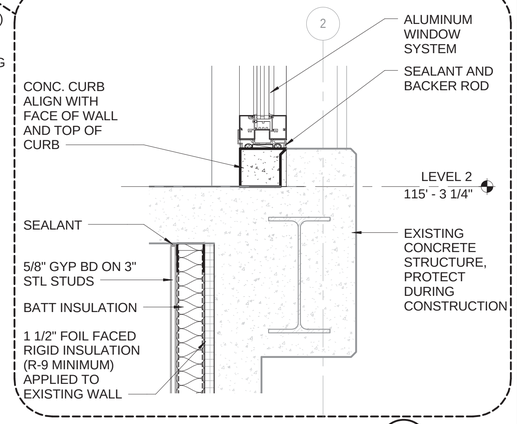

SCALE: 3/4" = 1'-0"

SCALE: 1 1/2"=1'-0"

SCALE(S) AS NOTED ON THIS SHEET ARE BASED ON FULL SIZE ANSI D (22 x 34) SHEET. DRAWFORM REVISION: 10 MARCH 2009

5/12/2015 7:41:00 AM

SYM	DESCRIPTION	DATE	APPR

NAVFAC

REGISTERED ARCHITECT EVAN THOMAS MINZE 22853 STATE OF TEXAS 05.15.2015

JACOBS/BURNS & MCDONNELL

JACOBS/BURNS & MCDONNELL, A JOINT VENTURE
155 NORTH LAKE AVENUE
PASADENA, CA 91101 USA
TEL 1 (817) 735-6000
FAX 1 (817) 735-6148

JEG NO. FDWD7911 A/E INFO

APPROVED
FOR COMMANDER NAVFAC 6/11/2015

ACTIVITY

SATISFACTORY TO DATE

DES	CPC	DRW	MTH	CHK	WRP

PMDM KAO
BRANCH MANAGER
CHIEF ENGARCH
FIRE PROTECTION

DEPARTMENT OF THE NAVY
NAVAL FACILITIES ENGINEERING COMMAND
NAVFAC PACIFIC
NAVAL FACILITIES ENGINEERING COMMAND – PACIFIC
JOINT BASE PEARL HARBOR - HICKAM
MARINE CORPS BASE HAWAII
KANEOHE, HAWAII

FY14 MCON PROJECT P-863
AIRCRAFT MAINTENANCE HANGAR UPGRADES

WALL SECTIONS

SCALE	AS SHOWN
EPROJECT NO.	862914
CONSTR. CONTR. NO.	
NAVFAC DRAWING NO.	19043365
SHEET	100 OF 313

A-311

FINAL DESIGN - 15 MAY 2015

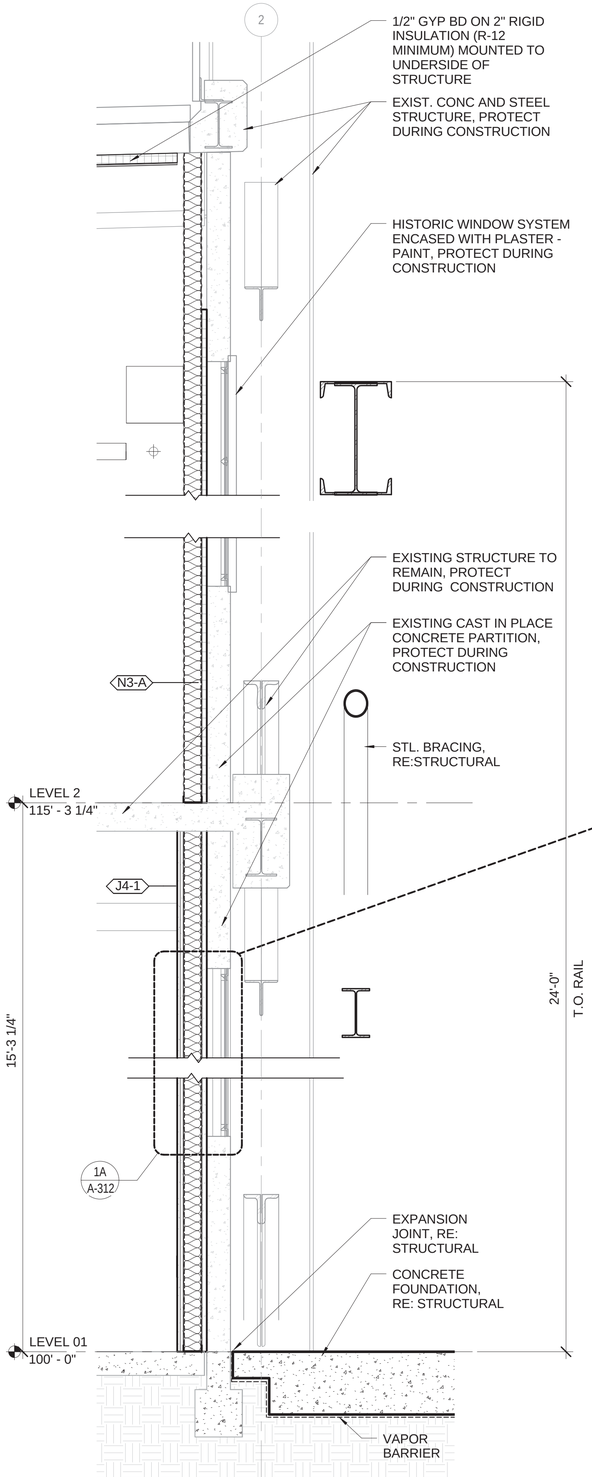

WALL SECTION
3/4" = 1'-0"
A-102 A-107
1

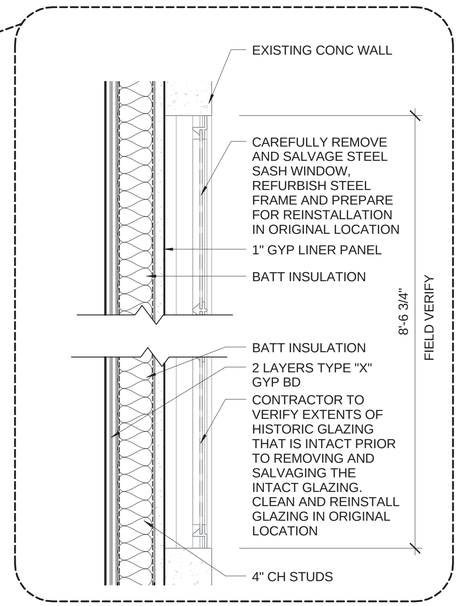

SECTION DETAIL
1 1/2" = 1'-0"
A-312 1A

NOTE:
THE HISTORIC STEEL SASH WINDOW SYSTEM IS EMBEDDED IN A PLASTER WALL, AND THE EXTENTS OF THE INTACT GLAZING IS UNKNOWN.

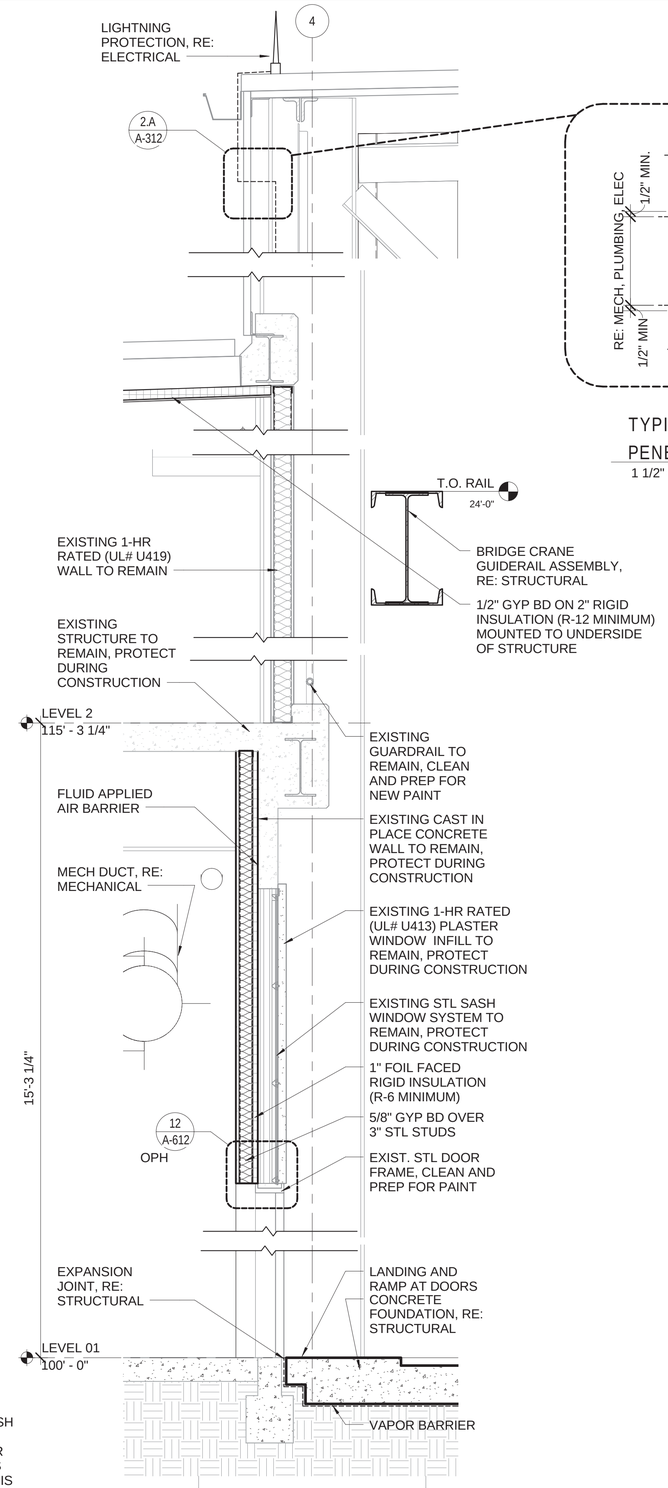

WALL SECTION
3/4" = 1'-0"
A-105 A-109 A-106 A-211
2

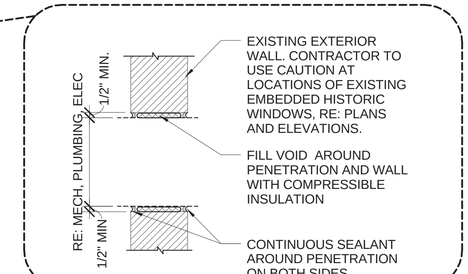

TYPICAL EXTERIOR WALL PENETRATION
1 1/2" = 1'-0"
A-312 2.A

SCALE: 3/4" = 1'-0"
0 3

SCALE: 1 1/2"=1'-0"
1 0 1

SCALE(S) AS NOTED ON THIS SHEET ARE BASED ON FULL SIZE ANSI D (22" x 34") SHEET. DRAWFORM REVISION: 10 MARCH 2009

5/12/2015 7:41:06 AM

APPR	DATE	DESCRIPTION	SYM

NAVFAC

REGISTERED ARCHITECT ANDREW THOMAS 22853 STATE OF TEXAS 5.15.2015

JACOBS/ A Jacobs & CH2M HILL Company

JACOBS/BURNS & MCDONNELL, A JOINT VENTURE
155 NORTH LAKE AVENUE
PASADENA, CA 91101 USA
TEL 1 (817) 735-6000
FAX 1 (817) 735-6148

JEG NO. FDWD7911 A/E INFO

APPROVED
FOR COMMANDER NAVFAC 6/11/2015

ACTIVITY

SATISFACTORY TO DATE

DES	CPC	DRW	MTH	CHK	WRP

PMDM KAO
BRANCH MANAGER
CHIEF ENGARCH
FIRE PROTECTION

DEPARTMENT OF THE NAVY
NAVFAC PACIFIC
NAVAL FACILITIES ENGINEERING COMMAND ~ PACIFIC
NAVAL FACILITIES ENGINEERING COMMAND
JOINT BASE PEARL HARBOR - HICKAM
MARINE CORPS BASE HAWAII
KANEOHE, HAWAII
FY14 MCON PROJECT P-863
AIRCRAFT MAINTENANCE HANGAR UPGRADES
WALL SECTIONS

SCALE	AS SHOWN
EPROJECT NO.	862914
CONSTR. CONTR. NO.	
NAVFAC DRAWING NO.	19043366
SHEET	101 OF 313

A-312

FINAL DESIGN - 15 MAY 2015

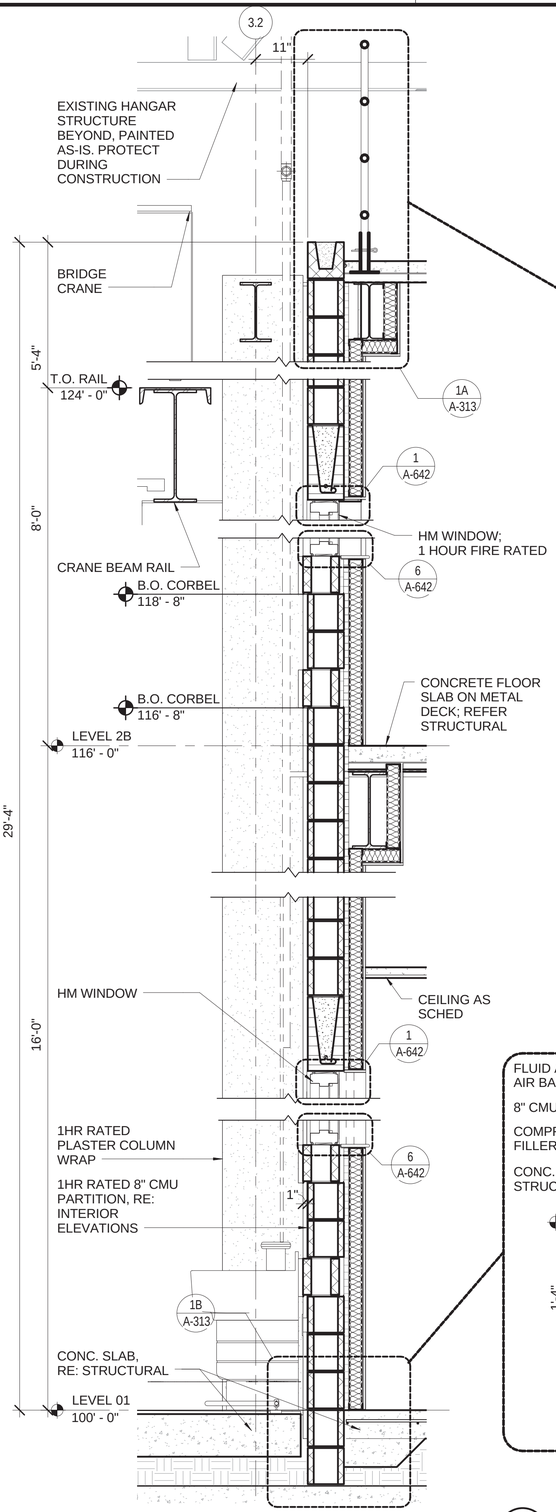

WALL SECTION
3/4" = 1'-0"
A-100, A-103, A-108, A-132, A-201, A-210
1

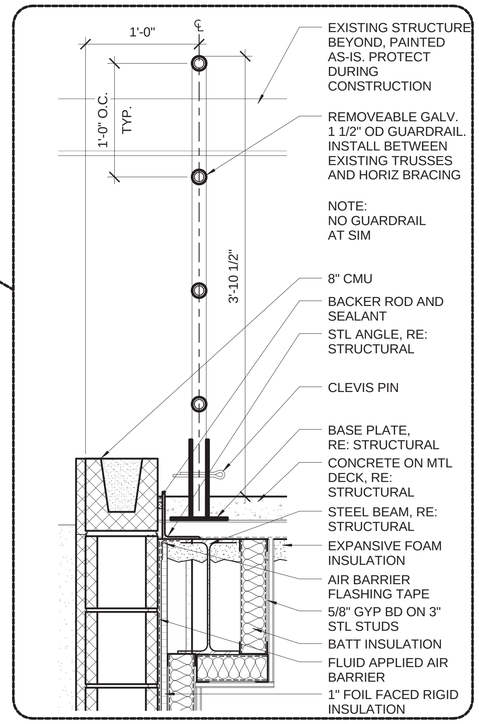

SECTION DETAIL
1 1/2" = 1'-0"
A-210
A-313
1A

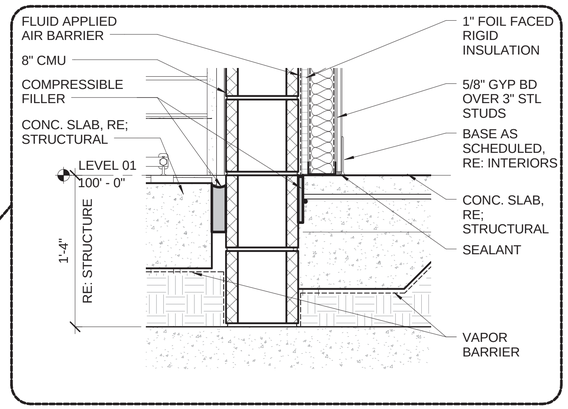

SECTION DETAIL
1 1/2" = 1'-0"
A-313
1B

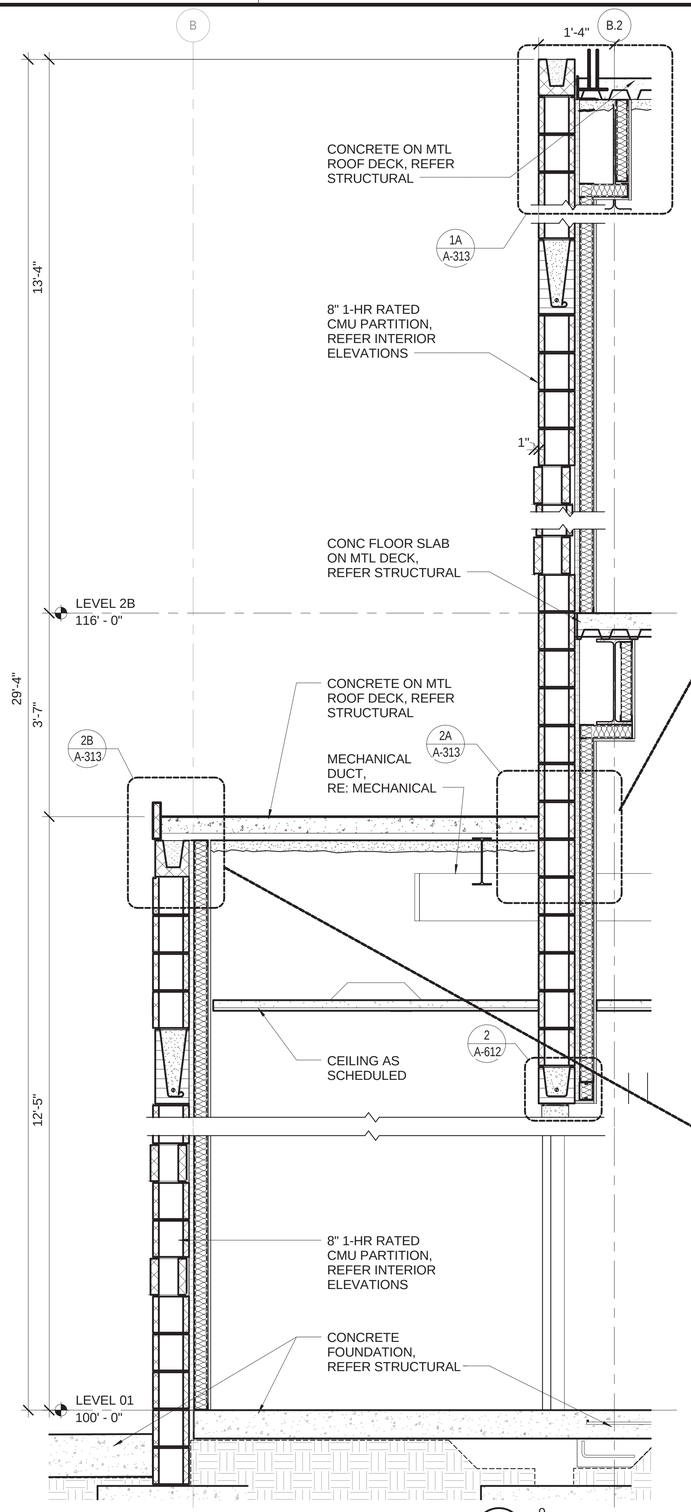

WALL SECTION
3/4" = 1'-0"
A-104, A-108, A-421
2

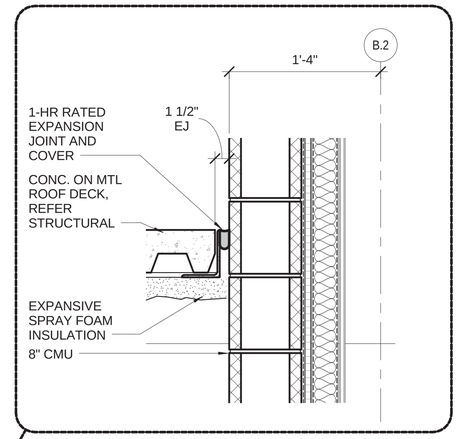

SECTION DETAIL
1 1/2" = 1'-0"
A-313
2A

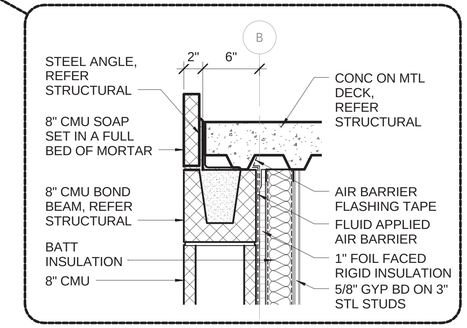

SECTION DETAIL
1 1/2" = 1'-0"
A-313
2B

SCALE: 3/4" = 1'-0"
SCALE: 1 1/2"=1'-0"

APPR			
DATE			
DESCRIPTION			
SYM			

NAVFAC

REGISTERED ARCHITECT
JOHN THOMAS
05-15-2015
22853
STATE OF TEXAS

JACOBS/BURNS & McDONNELL

JACOBS/BURNS & MCDONNELL, A JOINT VENTURE
155 NORTH LAKE AVENUE
PASADENA, CA 91101 USA
TEL 1 (817) 735-6000
FAX 1 (817) 735-6148

JEG NO. FGWD7911 A/E INFO

APPROVED
FOR COMMANDER NAVFAC 6/11/2015

ACTIVITY

SATISFACTORY TO DATE

DES	CPC	DRW	MTH	CHK	WRP

PMDM KAD
BRANCH MANAGER
CHIEF ENGARCH
FIRE PROTECTION

DEPARTMENT OF THE NAVY
NAVFAC PACIFIC
NAVAL FACILITIES ENGINEERING COMMAND ~ PACIFIC
NAVAL FACILITIES ENGINEERING COMMAND – HICKAM
JOINT BASE PEARL HARBOR - HICKAM
MARINE CORPS BASE HAWAII
KANEOHE, HAWAII
FY14 MCON PROJECT P-863
AIRCRAFT MAINTENANCE HANGAR UPGRADES
WALL SECTIONS

SCALE	AS SHOWN
EPROJECT NO.	862914
CONSTR. CONTR. NO.	
NAVFAC DRAWING NO.	19043367
SHEET	102 OF 313

A-313

5/12/2015 7:41:18 AM

SCALE(S) AS NOTED ON THIS SHEET ARE BASED ON FULL SIZE ANSI D (22" x 34") SHEET. DRAWFORM REVISION: 10 MARCH 2009

FINAL DESIGN - 15 MAY 2015

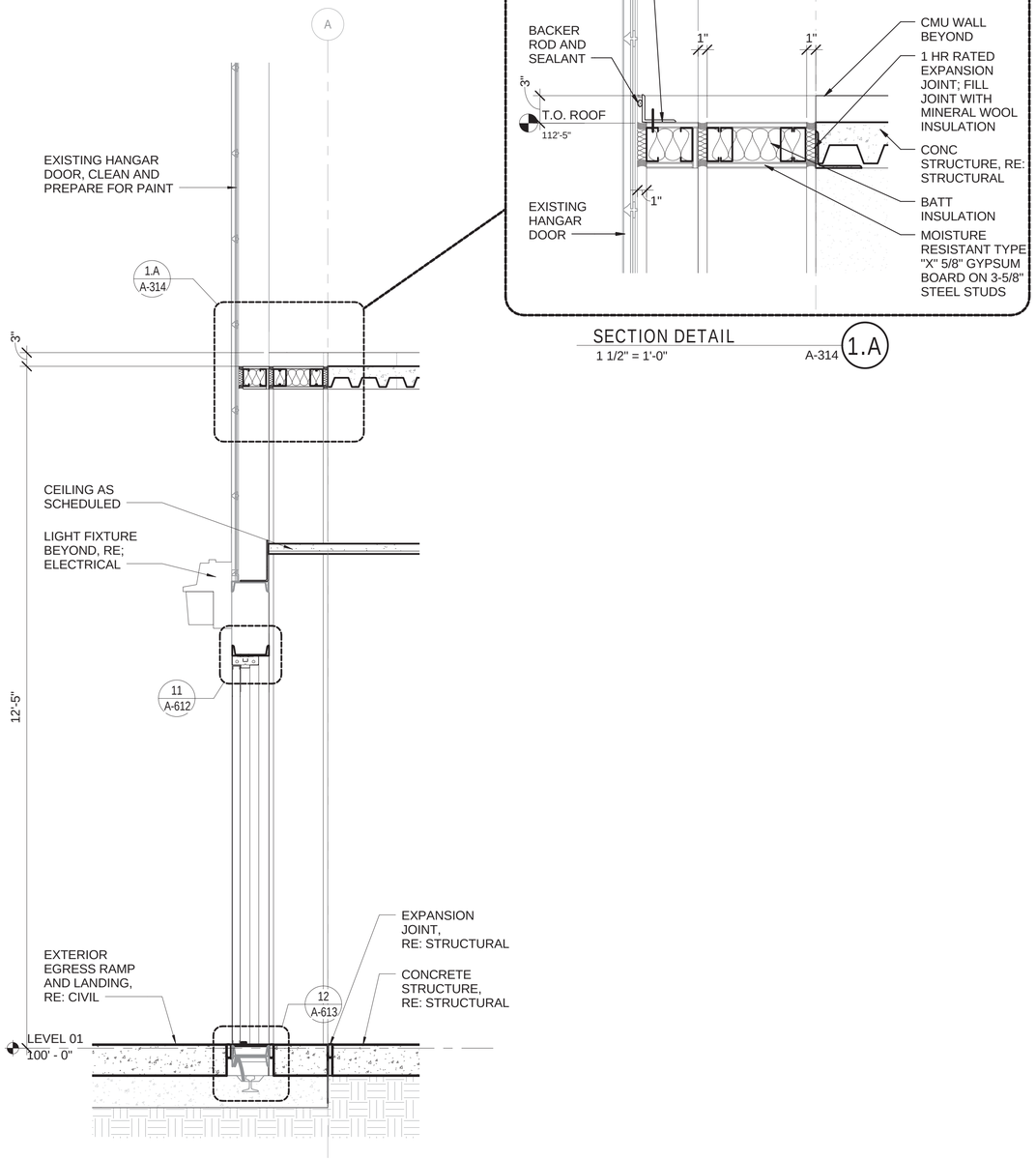

WALL SECTION
3/4" = 1'-0"
A-314
A-301
1

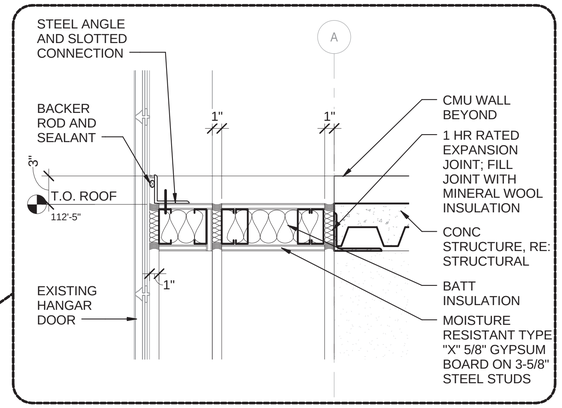

SECTION DETAIL
1 1/2" = 1'-0"
A-314
1.A

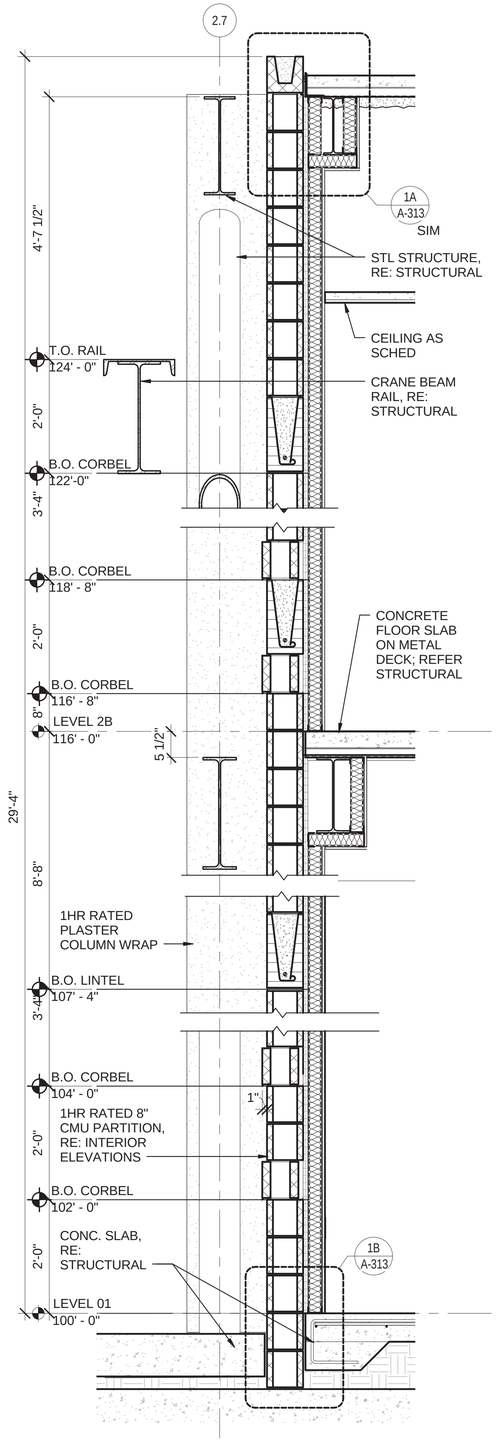

WALL SECTION
3/4" = 1'-0"
A-314
A-103
A-210
2

0 3
SCALE: 3/4" = 1'-0"

1 0 1
SCALE: 1 1/2"=1'-0"

NO.	DESCRIPTION	DATE	APPR.
1	95%	5/12/2015	

NAVFAC

REGISTERED ARCHITECT
ANDREW THOMAS PAGE
5.15.2015
22853
STATE OF TEXAS

JACOBS/BURNS & MCDONNELL
JACOBS/BURNS & MCDONNELL, A JOINT VENTURE
155 NORTH LAKE AVENUE
PASADENA, CA 91101 USA
TEL 1 (817) 735-6000
FAX 1 (817) 735-6148

JEG NO. FDWD7911 A/E INFO

APPROVED
FOR COMMANDER NAVFAC 6/11/2015

ACTIVITY

SATISFACTORY TO DATE

DES	CPC	DRW	MTH	CHK	WRP

PWDM KAO
BRANCH MANAGER
CHIEF ENGARCH
FIRE PROTECTION

DEPARTMENT OF THE NAVY
NAVFAC PACIFIC
MARINE CORPS BASE HAWAII
NAVAL FACILITIES ENGINEERING COMMAND – PACIFIC
JOINT BASE PEARL HARBOR - HICKAM
KANEOHE, HAWAII
FY14 MCON PROJECT P-863
AIRCRAFT MAINTENANCE HANGAR UPGRADES
WALL SECTIONS

SCALE AS SHOWN
EPROJECT NO. 862914
CONSTR. CONTR. NO.
NAVFAC DRAWING NO. 19043368
SHEET 103 OF 313
A-314

5/12/2015 7:41:23 AM

FINAL DESIGN - 15 MAY 2015

SCALE(S) AS NOTED ON THIS SHEET ARE BASED ON FULL SIZE ANSI D (22" x 34") SHEET. DRAWFORM REVISION: 10 MARCH 2009

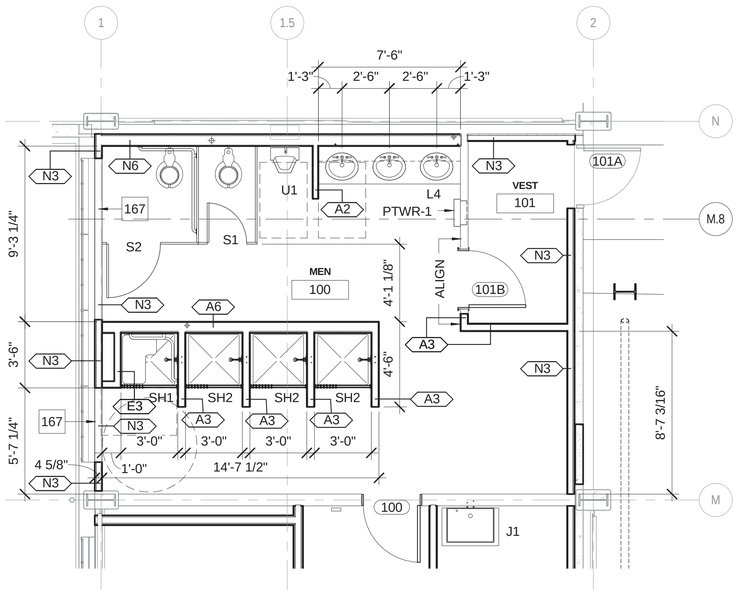

ENLARGED PLAN - MENS RESTROOM 100

1/4" = 1'-0"

A-101 (1)

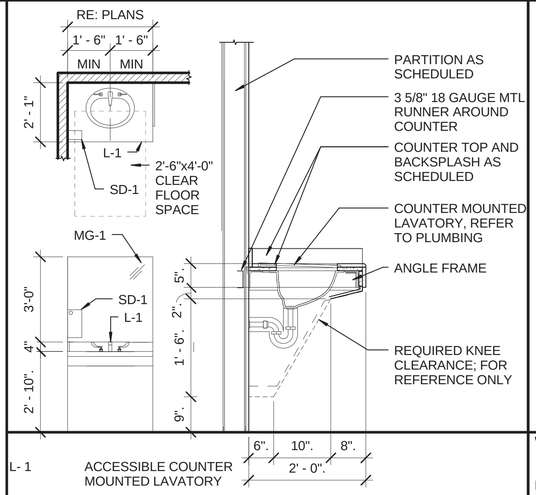

L- 1	ACCESSIBLE COUNTER MOUNTED LAVATORY
MG- 1	MIRROR STAINLESS STEEL FRAME, 36" HIGH, FULL LENGTH
SD- 1	LAVATORY MOUNTED SOAP DISPENSER, BOBRICK B-26607

L1 ACCESSIBLE COUNTER MOUNTED LAVATORY

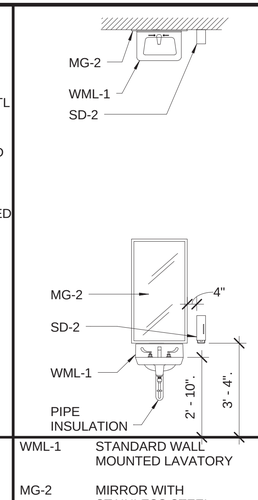

WML-1	STANDARD WALL MOUNTED LAVATORY
MG-2	MIRROR WITH STAINLESS STEEL FRAME 24" X 36", BOBRICK: B-165-2436
SD-2	SURFACE MOUNTED SOAP DISPENSER, BOBRICK: B-26607

L2 ACCESSIBLE WALL MOUNTED LAVATORY

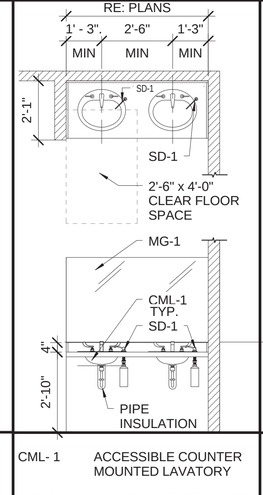

CML- 1	ACCESSIBLE COUNTER MOUNTED LAVATORY
MG - 1	MIRROR WITHSTAINLESS STEEL FRAME, 36" HIGH, FULL LENGTH
SD- 1	LAV MOUNTED SOAP DISP, BOBRICK B-822

L3 ACCESSIBLE MULTIPLE COUNTER MTD LAVATORY

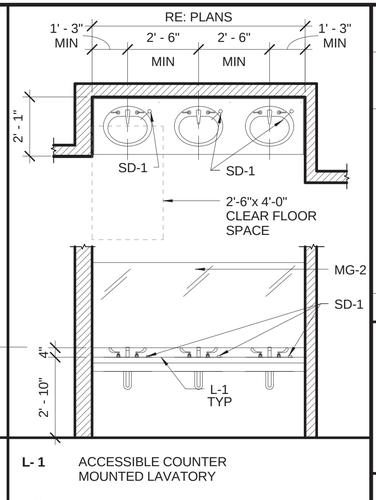

L- 1	ACCESSIBLE COUNTER MOUNTED LAVATORY
MG - 1	MIRROR WITH STAINLESS STEEL FRAME, 36" HIGH, FULL LENGTH
SD- 1	LAVATORY MOUNTED SOAP DISPENSER, BOBRICK B-822

L4 ACCESSIBLE MULTIPLE COUNTER MOUNTED LAVATORIES

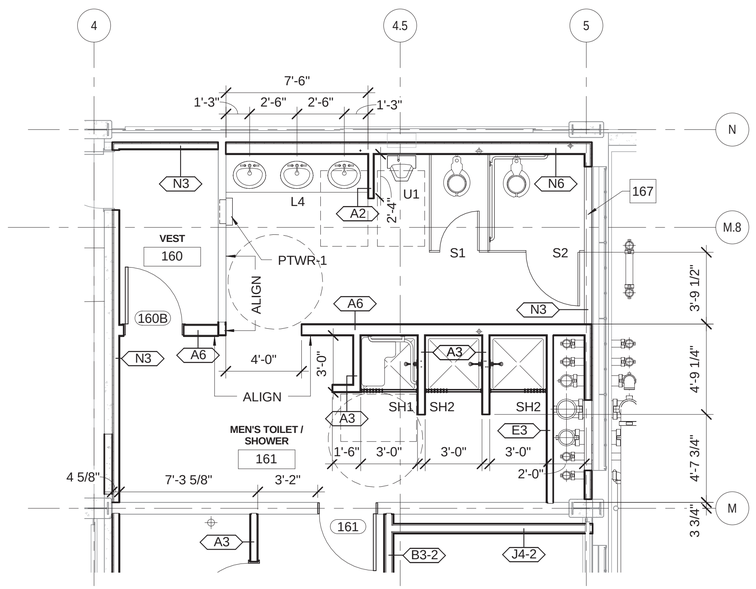

ENLARGED PLAN - MENS RESTROOM 161

1/4" = 1'-0"

A-105 (2)

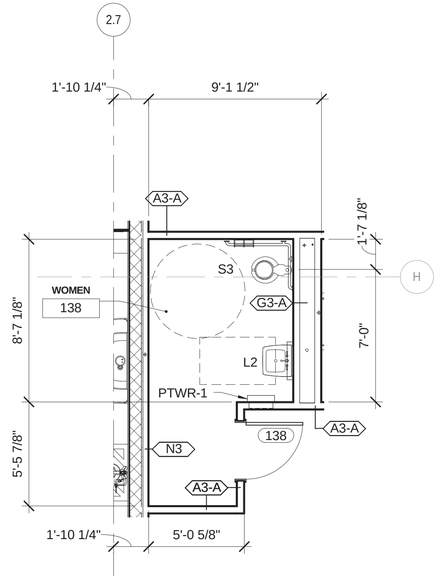

ENLARGED PLAN - WOMENS RESTROOM 138

1/4" = 1'-0"

A-103 (3)

GENERAL NOTES - TOILET PLANS

A	PROVIDE 5/8" CEMENT BOARD AT ALL TILED WET WALL LOCATIONS IN RESTROOMS AND LOCKER ROOMS. PROVIDE 5/8" WATER RESISTANT GYP. BOARD AT ALL PAINTED WALL AND CEILING LOCATIONS IN RESTROOMS, LOCKER ROOMS, AND JANITOR'S CLOSETS. AND WITHIN 4'-0" OF WATER FOUNTAIN LOCATIONS, REFER TO FINISH SCHEDULE SHEET I-601 FOR TILE WALL LOCATIONS.
B	MANUFACTURER PRODUCTS INDICATED ESTABLISHES A MINIMUM LEVEL OF ACCEPTABLE QUALITY. IT IS NOT INTENDED TO LIMIT THE SELECTION OF APPROVED EQUIVALENT PRODUCTS.
C	PROVIDE CONCEALED WOOD BLOCKING BETWEEN STEEL STUDS AT ALL WALL MOUNTED TOILET PARTITION BRACKET LOCATIONS. VERIFY LOCATIONS WITH SHOP DRAWINGS.
D	REFER TO PLAN FOR QUANTITIES AND ORIENTATION OF TOILET PARTITIONS AND ACCESSORIES.

KEYNOTES

167	FRAME NEW WALL AROUND EXISTING HISTORIC WINDOW TO REMAIN EXPOSED

0 8

SCALE: 1/4" = 1'-0"

PLAN NORTH

JACOBS/BURNS & MCDONNELL, A JOINT VENTURE
155 NORTH LAKE AVENUE
PASADENA, CA 91101 USA
TEL 1 (617) 735-6000
FAX 1 (617) 735-6148

JEG NO. FDWD7911 A/E INFO

APPROVED

FOR COMMANDER NAVFAC 6/11/2015

ACTIVITY

SATISFACTORY TO DATE

DES	CPC	DRW	MTH	CHK	WRP

PMDM KAO

BRANCH MANAGER

CHIEF ENGARCH

FIRE PROTECTION

NAVAL FACILITIES ENGINEERING COMMAND – PACIFIC
JOINT BASE PEARL HARBOR - HICKAM
KANEOHE, HAWAII

FY14 MCON PROJECT P-863
AIRCRAFT MAINTENANCE HANGAR UPGRADES

ENLARGED RESTROOM PLANS - LEVEL 1

DEPARTMENT OF THE NAVY
NAVFAC PACIFIC
MARINE CORPS BASE HAWAII

SCALE	AS SHOWN
EPROJECT NO.	862914
CONSTR. CONTR. NO.	
NAVFAC DRAWING NO.	19043369
SHEET	104 OF 313

A-401

FINAL DESIGN - 15 MAY 2015

SCALE(S) AS NOTED ON THIS SHEET ARE BASED ON FULL SIZE ANSI D (22" x 34") SHEET. DRAWFORM REVISION: 10 MARCH 2009

5/12/2015 7:41:32 AM

GENERAL NOTES - TOILET PLANS

A	PROVIDE 5/8" CEMENT BOARD AT ALL TILED WET WALL LOCATIONS IN RESTROOMS AND LOCKER ROOMS. PROVIDE 5/8" WATER RESISTANT GYP. BOARD AT ALL PAINTED WALL AND CEILING LOCATIONS IN RESTROOMS, LOCKER ROOMS, AND JANITOR'S CLOSETS. AND WITHIN 4'-0" OF WATER FOUNTAIN LOCATIONS, REFER TO FINISH SCHEDULE SHEET I-601 FOR TILE WALL LOCATIONS.
B	MANUFACTURER PRODUCTS INDICATED ESTABLISHES A MINIMUM LEVEL OF ACCEPTABLE QUALITY. IT IS NOT INTENDED TO LIMIT THE SELECTION OF APPROVED EQUIVALENT PRODUCTS.
C	PROVIDE CONCEALED WOOD BLOCKING BETWEEN STEEL STUDS AT ALL WALL MOUNTED TOILET PARTITION BRACKET LOCATIONS. VERIFY LOCATIONS WITH SHOP DRAWINGS.
D	REFER TO PLAN FOR QUANTITIES AND ORIENTATION OF TOILET PARTITIONS AND ACCESSORIES.

KEYNOTES

186	ROOF ACCESS LADDER AND ROOF HATCH ABOVE
267	LOCATION OF BUILDING NUMBER EXTERIOR BUILDING SIGNAGE, REFER TO INTERIORS 1/I-302
273	PROVIDE SIGNAGE NOTING THAT RESTROOM IS A NON-HANDICAP ACCESSIBLE RESTROOM, RE: INTERIORS
428	VIRTUAL CLEAR FLOOR SPACE FOR HANDICAPPED ACCESSIBILITY INDICATED AT LOCATIONS OF ACCESSIBLE FIXTURES AND TURN AROUNDS

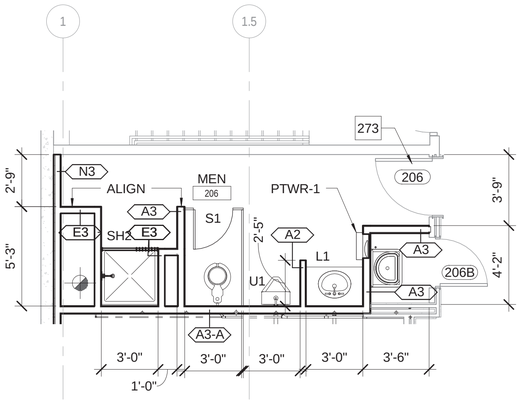

ENLARGED PLAN - MENS RESTROOM 206

1/4" = 1'-0"

A-107 1

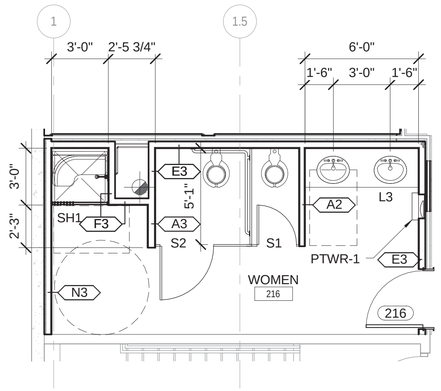

ENLARGED PLAN - WOMENS RESTROOM 216

1/4" = 1'-0"

A-107 2

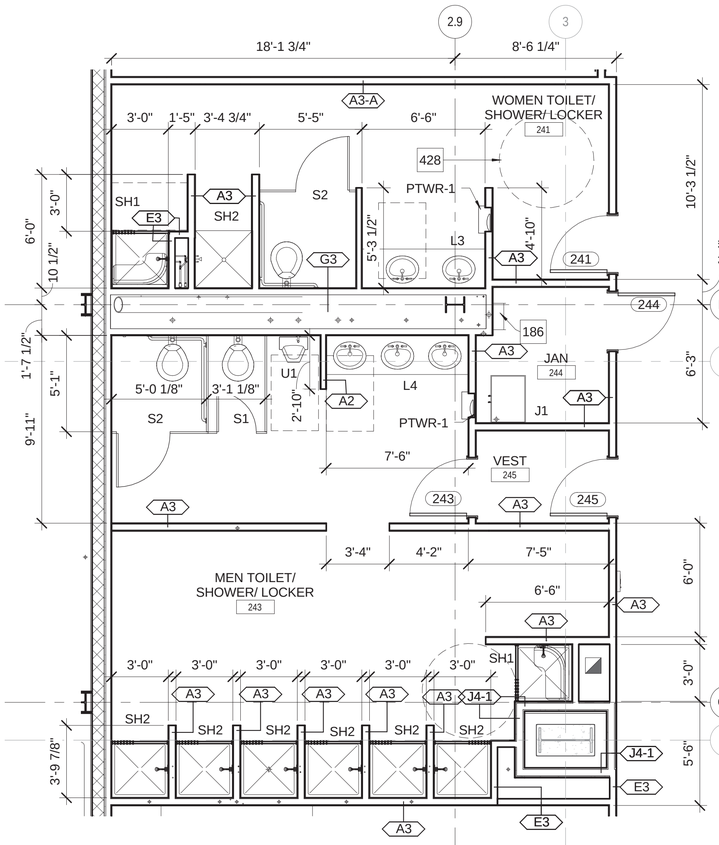

ENLARGED PLAN - LOCKER ROOMS

1/4" = 1'-0"

A-108 4

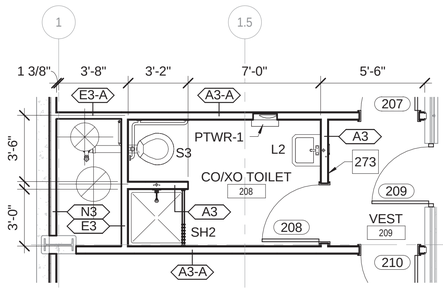

ENLARGED PLAN - CO/XO TOILET 208

1/4" = 1'-0"

A-107 3

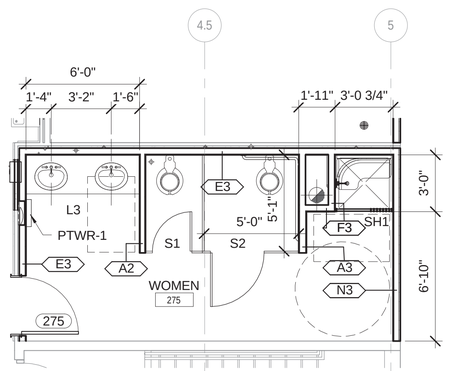

ENLARGED PLAN - WOMENS RESTROOM 275

1/4" = 1'-0"

A-109 5

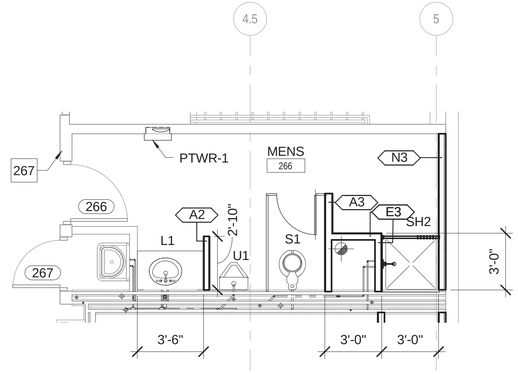

ENLARGED PLAN - MENS RESTROOM 266

1/4" = 1'-0"

A-109 6

PLAN NORTH

0 8

SCALE: 1/4" = 1'-0"

JACOBS/BURNS & MCDONNELL, A JOINT VENTURE
155 NORTH LAKE AVENUE
PASADENA, CA 91101 USA
TEL 1 (817) 735-6000
FAX 1 (817) 735-6148

JEG NO. FSW57911 A/E INFO

APPROVED
FOR COMMANDER NAVFAC 6/11/2015

ACTIVITY

SATISFACTORY TO DATE

DES	CPC	DRW	MTH	CHK	WRP

PMDM KAD
BRANCH MANAGER
CHIEF ENGARCH
FIRE PROTECTION

NAVAL FACILITIES ENGINEERING COMMAND
JOINT BASE PEARL HARBOR - HICKAM
KANEOHE, HAWAII
FY14 MCON PROJECT P-863
AIRCRAFT MAINTENANCE HANGAR UPGRADES
ENLARGED RESTROOM PLANS - LEVEL 2

DEPARTMENT OF THE NAVY
NAVAL FACILITIES ENGINEERING COMMAND
NAVFAC PACIFIC
MARINE CORPS BASE HAWAII

SCALE AS SHOWN
EPROJECT NO. 862914
CONSTR. CONTR. NO.
NAVFAC DRAWING NO. 19043370
SHEET 105 OF 313

A-402

APPR
DATE
DESCRIPTION
SYM

5/12/2015 7:41:44 AM

SCALE(S) AS NOTED ON THIS SHEET ARE BASED ON FULL SIZE ANSI D (22" x 34") SHEET. DRAWFORM REVISION: 10 MARCH 2009

FINAL DESIGN: 15 MAY 2015

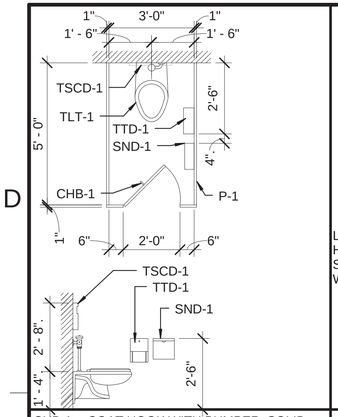

CHB-1	COAT HOOK WITH BUMPER, SOLID CAST ALUMINUM, CENTER ON DOOR; BOBRICK: B-212
TLT-1	STANDARD TOILET, RE: PLUMBING
TSCD-1	SURFACE MOUNTED TOILET SEAT COVER DISPENSER; BOBRICK; B-4221
TTD-1	SURFACE MOUNTED TOILET PAPER DISPENSER BOBRICK: B-4288
P-1	STALL PARTITION; RE: "P1"
SND-1	SURFACE MOUNTED SANITARY NAPKIN DISPOSAL, BOBRICK: B-254 AT WOMEN'S TOILET STALLS ONLY

S1 STANDARD STALL

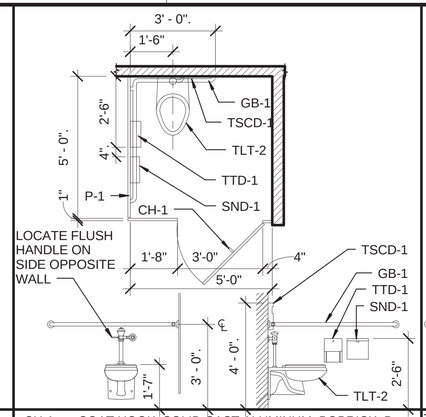

CH-1	COAT HOOK; SOLID CAST ALUMINUM; BOBRICK: B-211
GB-1	GRAB BAR L-SHAPE; BOBRICK: B-68137
TLT-2	ACCESSIBLE TOILET, RE: PLUMBING FOR MOUNTING INFORMATION
TSCD-1	SURFACE MOUNTED TOILET SEAT COVER DISPENSER BOBRICK; B-4221
TTD-1	SURFACE MOUNTED TOILET PAPER DISPENSER; BOBRICK: B-4288
P-1	STALL PARTITION; RE: "P1"

S2 END OF ROW ACCESSIBLE STALL

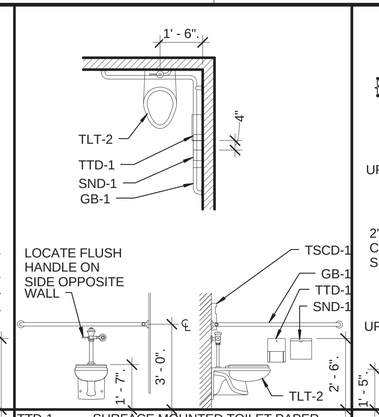

TTD-1	SURFACE MOUNTED TOILET PAPER DISPENSER BOBRICK: B-4288
GB-1	GRAB BAR L SHAPE BOBRICK: B-68137
SND-1	SURFACE MOUNTED SANITARY NAPKIN DISPOSAL, BOBRICK B-254 AT WOMEN'S TOILET STALLS ONLY.
TSCD-1	SURFACE MOUNTED TOILET SEAT COVER DISPENSER; BOBRICK; B-4221
TLT-2	ACCESSIBLE TOILET, RE: PLUMBING MOUNTING INFORMATION

S3 UNISEX ACCESSIBLE STALL

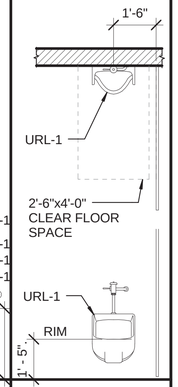

URL-1	ACCESSIBLE URINAL, RE: PLUMBING

U1 ACCESSIBLE URINAL

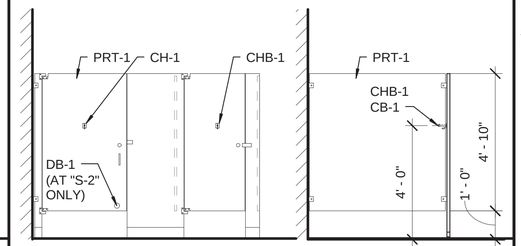

PRT-1	1" THICK SOLID PHENOLIC TOILET PARTITION; BOBRICK: B-1080
CHB-1	CLOTHES HOOK AND BUMPER CENTER ON DOOR; BOBRICK: B-212
CH-1	CLOTHES HOOK CENTER ON DOOR; BOBRICK: B-2116
DB-1	DOOR BUMPER AT "S-2" TYPE STALLS ONLY; BOBRICK: B-687

TOILET STALL NOTES:
1. REFER TO PLAN FOR QUANTITIES AND ORIENTATION OF TOILET PARTITIONS AND URINAL SCREENS

P1 STANDARD FLOOR MOUNTED TOILET PARTITIONS

SHOWER STALL NOTES:
1. FLOOR SLOPES TO BE A MAX OF 1:50 IN ANY DIRECTION.
2. CURBS IN SHOWER STALLS TO BE NO HIGHER THAN 1/2"; REFER 2/A-401
3. SHOWER SPRAY UNIT TO HAVE A HOSE 60" LONG THAT CAN BE USED FIXED OR HAND HELD.
4. SHOWER FLOOR TO BE NON-SLIP

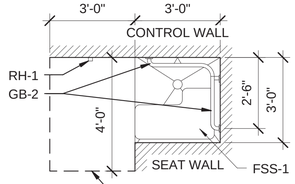

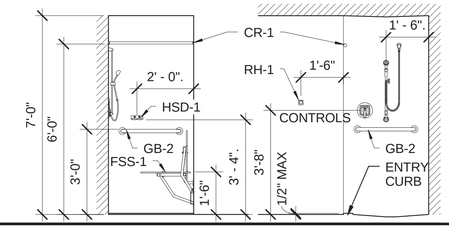

FSS-1	FOLDING SHOWER; BOBRICK B-5181	CR-1	HEAVY DUTY CURTAIN ROD,BOBRICK B-6107 VINYL SHOWER CURTAIN, BOBRICK 204-3 NOT SHOWN - (12) CURTAIN HOOKS
HSD-1	HEAVY DUTY SOAP DISH; BOBRICK B-4390		
GB-2	GRAB BAR L-SHAPE, BOBRICK B6816.99, B-5897 AT 5'-0" WIDE SHOWERS		
RH-1	ROBE HOOK,BOBRICK B-677		

SH2 IS SIMILAR TO ABOVE, ONLY PROVIDE THE FOLLOWING:
1. HSD-1
2. RH-1
3. 4"X4" SHOWER CURB, RE: 2/A-401
4. FIXED HEAD UNIT AT 72" AFF.

SH1 ACCESSIBLE SHOWER STALL

SH2 STANDARD SHOWER STALL

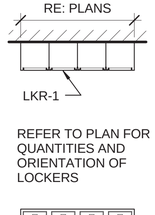

LKR-1	STANDARD METAL LOCKER, 12"X12"X3'-0 1/2" HIGH, DOUBLE STACK; MFR: PENCO; SERIES: VANGUARD

LK1 STANDARD LOCKERS

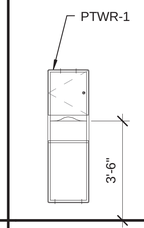

PTWR - 1	SERIES RECESSED PAPER TOWEL DISPENSER AND WASTE RECEPTACLE, BOBRICK: B-43944

MISC. TOILET ROOM MOUNTING HEIGHTS

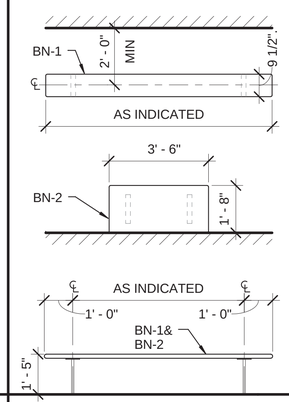

BN- 1	FIXED SHOWER BENCH; 32mm (1 1/4") THICK HARDWOOD SEAT, ROUNDED EDGES, WITH STAINLESS STEEL PEDESTALS
BN- 2	FIXED SHOWER BENCH; 32mm (1 1/4") THICK HARDWOOD SEAT, ROUNDED EDGES, FACTORY PAINTED STEEL PEDESTALS H.C. ACCESSIBLE AGAINST WALL

B1 STANDARD SHOWER BENCH

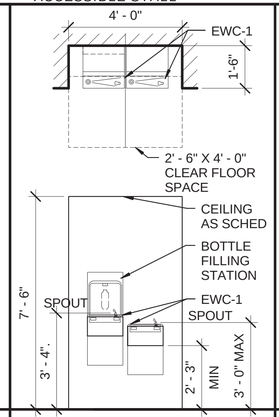

EWC - 1	ELECTRIC WATER COOLER: THE SPOUT SHALL PROVIDE A FLOW OF WATER 102mm (4") HIGH. CONTROLS SHALL BE FRONT MOUNTED

C1 ACCESSIBLE HIGH-LOW ELECTRIC WATER COOLER

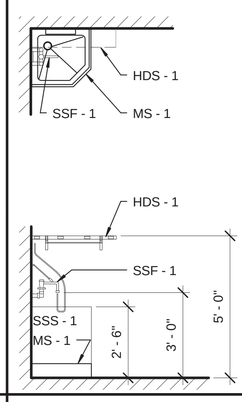

HDS - 1	HEAVY DUTY SHELF WITH MOP HOLDERS AND RAG HOOKS 8" x 36" BOBRICK: B-239-34
MS - 1	FLOOR MOUNTED UTILITY SINK 2' - 8"x 2' - 8"
SSF - 1	FAUCET WITH BUCKET HOOK, TOP BRACE, VACUUM BREAKER, HOSE THREADS, HOSE AND HOSE HOOK
SSS - 1	20 GAUGE STAINLESS STEEL SHEET METAL SHIELD ABOVE FLOOR SINK AT BOTH WALLS

J1 STANDARD JANITORS CLOSET

GENERAL NOTES - TOILET PLANS

A	PROVIDE 5/8" CEMENT BOARD AT ALL TILED WET WALL LOCATIONS IN RESTROOMS AND LOCKER ROOMS. PROVIDE 5/8" WATER RESISTANT GYP. BOARD AT ALL PAINTED WALL AND CEILING LOCATIONS IN RESTROOMS, LOCKER ROOMS, AND JANITOR'S CLOSETS. AND WITHIN 4'-0" OF WATER FOUNTAIN LOCATIONS, REFER TO FINISH SCHEDULE SHEET I-601 FOR TILE WALL LOCATIONS.
B	MANUFACTURER PRODUCTS INDICATED ESTABLISHES A MINIMUM LEVEL OF ACCEPTABLE QUALITY. IT IS NOT INTENDED TO LIMIT THE SELECTION OF APPROVED EQUIVALENT PRODUCTS.
C	PROVIDE CONCEALED WOOD BLOCKING BETWEEN STEEL STUDS AT ALL WALL MOUNTED TOILET PARTITION BRACKET LOCATIONS. VERIFY LOCATIONS WITH SHOP DRAWINGS.
D	REFER TO PLAN FOR QUANTITIES AND ORIENTATION OF TOILET PARTITIONS AND ACCESSORIES.

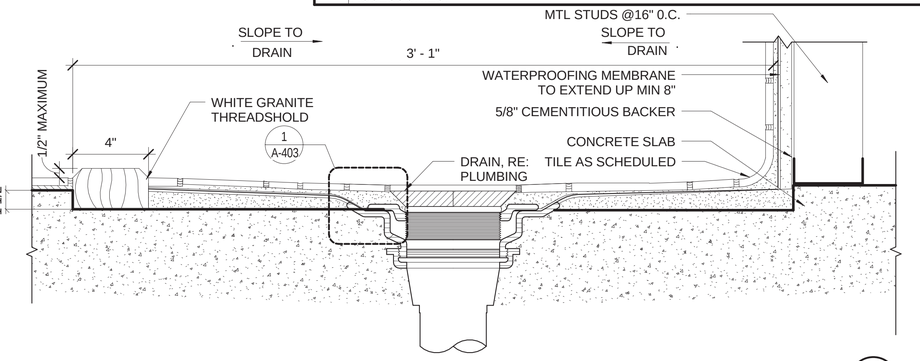

ACCESSIBLE SHOWER DETAIL AT NEW CONSTRUCTION 3
3" = 1'-0"

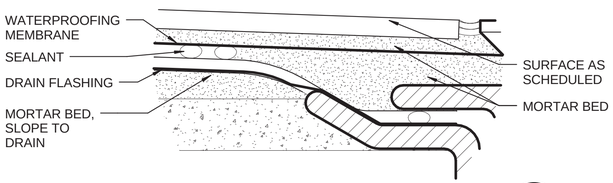

SHOWER FLASHING DETAIL 1
3" = 1'-0"

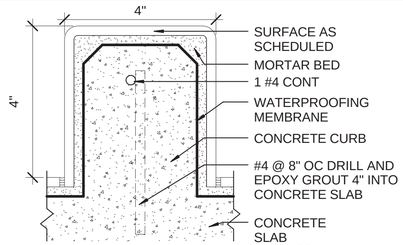

SHOWER CURB DETAIL 2
6" = 1'-0"

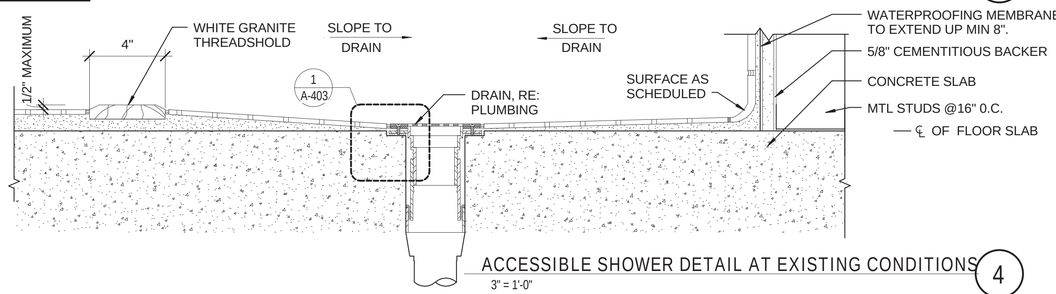

ACCESSIBLE SHOWER DETAIL AT EXISTING CONDITIONS 4
3" = 1'-0"

JACOBS/Burns & McDonnell
JACOBS/BURNS & MCDONNELL, A JOINT VENTURE
155 NORTH LAKE AVENUE
PASADENA, CA 91101 USA
TEL 1 (817) 735-6000
FAX 1 (817) 735-6148

JEG NO. FDWD7911 A/E INFO

APPROVED
FOR COMMANDER NAVFAC 6/11/2015

ACTIVITY

SATISFACTORY TO DATE

DES	CPC	DRW	MTH	CHK	WRP
PMDM					
BRANCH MANAGER					
CHIEF ENGARCH					
FIRE PROTECTION					

DEPARTMENT OF THE NAVY
NAVFAC PACIFIC
MARINE CORPS BASE HAWAII
NAVAL FACILITIES ENGINEERING COMMAND – PACIFIC
JOINT BASE PEARL HARBOR - HICKAM
KANEOHE, HAWAII
FY14 MCON PROJECT P-863
AIRCRAFT MAINTENANCE HANGAR UPGRADES
RESTROOM ACCESSORIES & DETAILS

SCALE AS SHOWN
EPROJECT NO. 862914
CONSTR. CONTR. NO.
NAVFAC DRAWING NO. 19043371
SHEET 106 OF 313

A-403

FINAL DESIGN - 15 MAY 2015

5/12/2015 7:41:49 AM

SCALE(S) AS NOTED ON THIS SHEET ARE BASED ON FULL SIZE ANSI D (22" x 34") SHEET. DRAWFORM REVISION: 10 MARCH 2009

KEYNOTES

049	(2) 30"X48" AREA OF REFUGE
147	STEEL GUARDRAIL; REFER 11/A-422 SIM

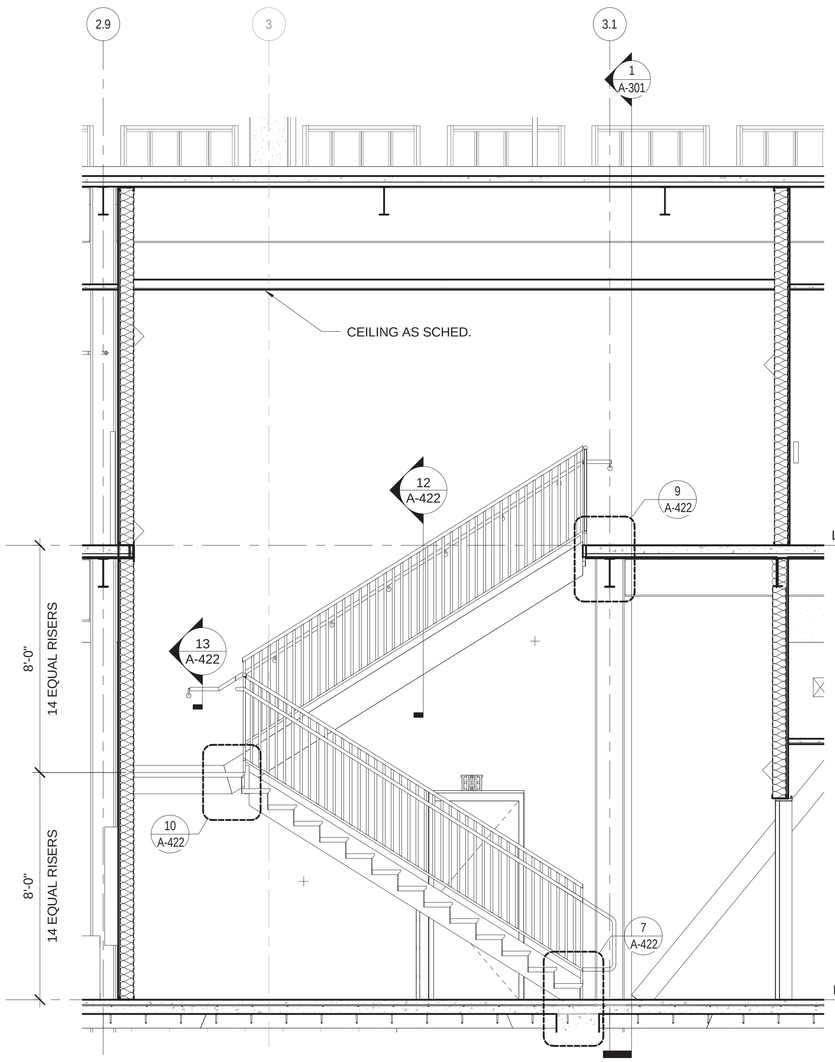

STAIR SECTION
3/8" = 1'-0"
A-421
1

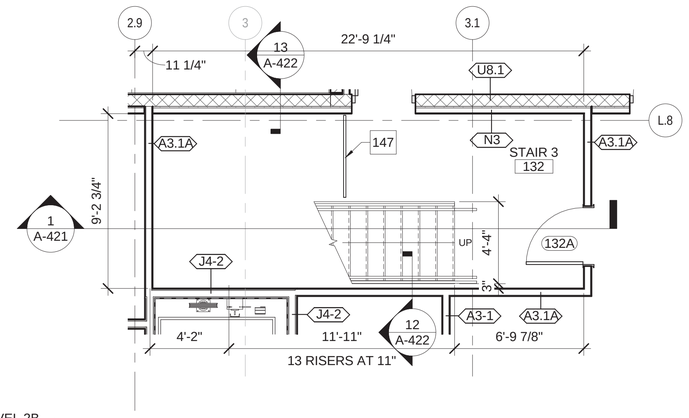

FIRST FLOOR ENLARGED PLAN - STAIR 132 (STAIR 3)
1/4" = 1'-0"
A-103
3

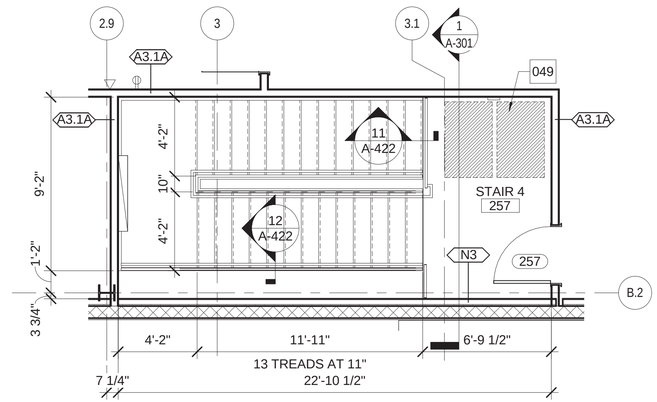

ENLARGED PLAN - STAIR 257 (STAIR 4)
1/4" = 1'-0"
A-108
5

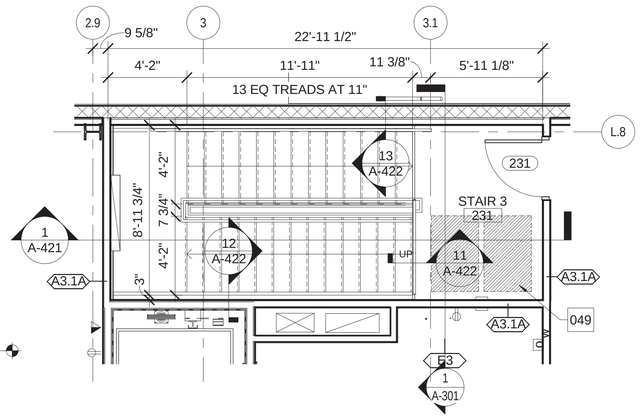

ENLARGED PLAN - STAIR 231 (STAIR 3)
1/4" = 1'-0"
A-108
2

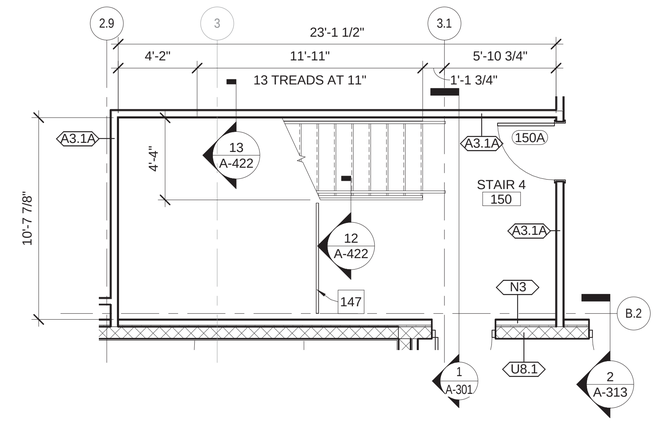

FIRST FLOOR ENLARGED PLAN - STAIR 150 (STAIR 4)
1/4" = 1'-0"
A-104
4

SYM	DESCRIPTION	DATE	APPR

NAVFAC

REGISTERED ARCHITECT
STEPHEN THOMAS
05.15.2015
22853
STATE OF TEXAS
SEAL

JACOBS/ BURNS & MCDONNELL

JACOBS/BURNS & MCDONNELL, A JOINT VENTURE
155 NORTH LAKE AVENUE
PASADENA, CA 91101 USA
TEL 1 (817) 735-6000
FAX 1 (817) 735-6148

JEG NO. FDW07911 A/E INFO

APPROVED
FOR COMMANDER NAVFAC 6/11/2015

ACTIVITY

SATISFACTORY TO DATE

DES	CPC	DRW	MTH	CHK	WRP

PM/DM KAD
BRANCH MANAGER
CHIEF ENG/ARCH
FIRE PROTECTION

DEPARTMENT OF THE NAVY
NAVAL FACILITIES ENGINEERING COMMAND
NAVFAC PACIFIC
NAVAL FACILITIES ENGINEERING COMMAND ~ PACIFIC
JOINT BASE PEARL HARBOR - HICKAM
MARINE CORPS BASE HAWAII
KANEOHE, HAWAII

FY14 MCON PROJECT P-863
AIRCRAFT MAINTENANCE HANGAR UPGRADES

ENLARGED STAIR PLANS

SCALE AS SHOWN
EPROJECT NO. 862914
CONSTR. CONTR. NO.
NAVFAC DRAWING NO. 19043372
SHEET 107 OF 313

A-421

FINAL DESIGN - 15 MAY 2015

SCALE(S) AS NOTED ON THIS SHEET ARE BASED ON FULL SIZE ANSI D (22" x 34") SHEET. DRAWFORM REVISION: 10 MARCH 2009

5/12/2015 7:41:58 AM

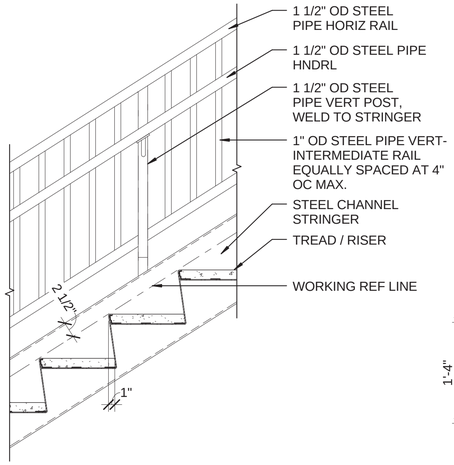

RAILING AT STAIR

1" = 1'-0" A-422 (1)

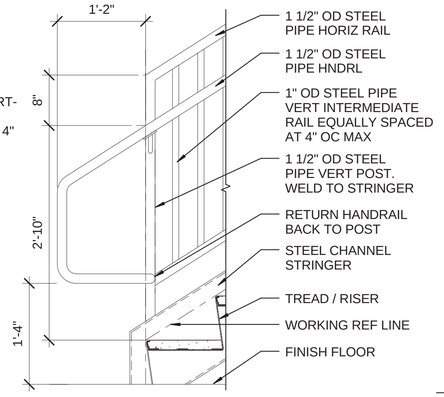

RAILING AT BOTTOM OF STAIR RUN WITH GUARD

1" = 1'-0" A-422 (2)

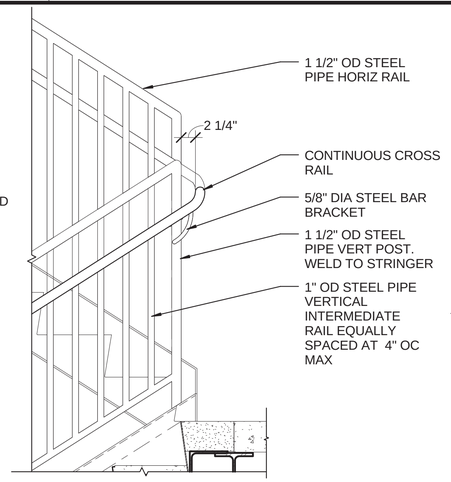

RAILING TRANSITION BETWEEN STAIR RUNS WITH GUARD

1" = 1'-0" A-422 (3)

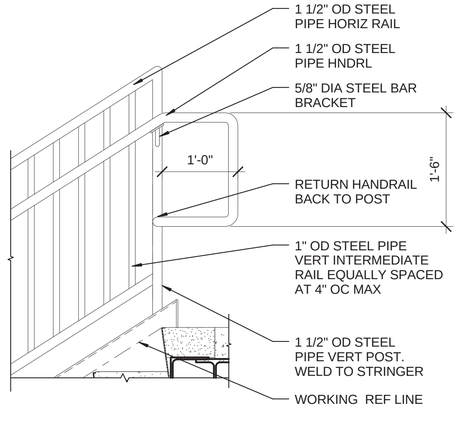

TYPICAL RAILING AT TOP OF STAIR RUN WITH GUARD

1" = 1'-0" A-422 (4)

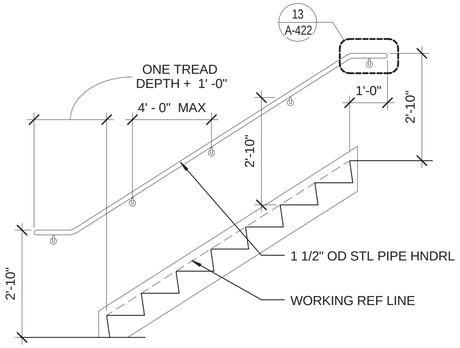

SURFACE MOUNTED HANDRAIL ELEVATION

1/2" = 1'-0" A-422 (5)

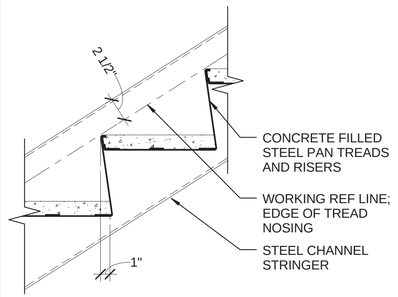

CONCRETE FILLED STEEL PAN TREAD

1 1/2" = 1'-0" A-422 (6)

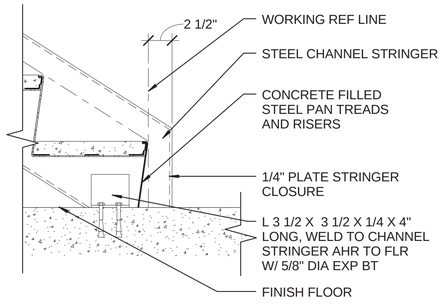

STAIR-CONC SLAB CONNECTION

1 1/2" = 1'-0" A-421 (7)

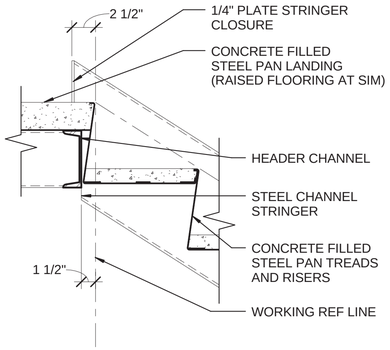

LANDING TO STAIR CONNECTION

1 1/2" = 1'-0" A-422 (8)

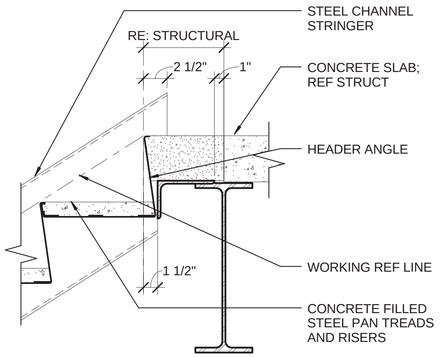

LANDING TO STAIR CONNECTION

1 1/2" = 1'-0" A-421 (9)

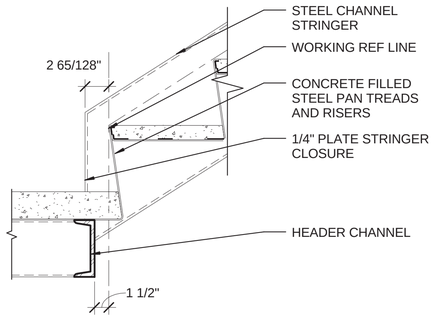

STAIR TO LANDING CONNECTION

1 1/2" = 1'-0" A-421 (10)

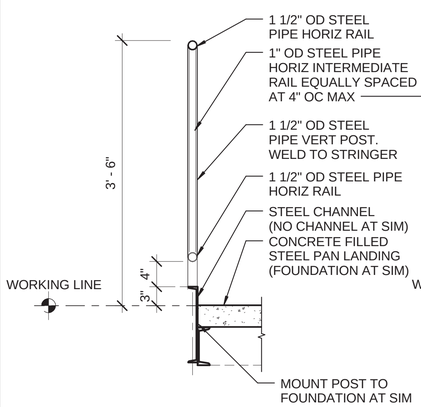

TYPICAL GUARDRAIL SECTION

1" = 1'-0" A-421 (11)

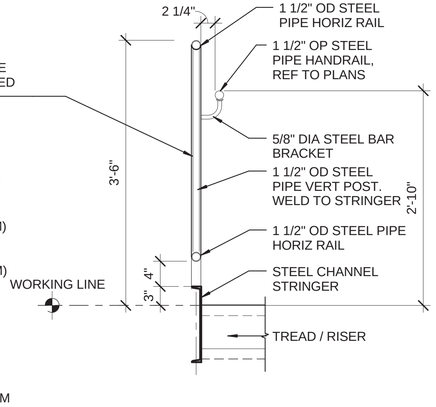

TYPICAL GUARDRAIL SECTION WITH HANDRAIL

1" = 1'-0" A-421 (12)

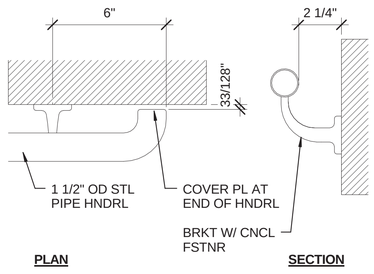

SURFACE MOUNTED HANDRAIL END CONDITION

3" = 1'-0" A-421 (13)

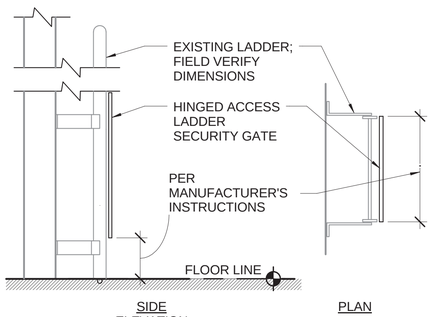

CATWALK ACCESS LADDER DETAIL

1" = 1'-0" A-422 (14)

6 4 2 0 6
SCALE: 3"=1'-0"
1 1/2 0 1 2
SCALE: 1"=1'-0"

APPR | DATE | DESCRIPTION | SYM

NAVFAC

REGISTERED ARCHITECT ANDREW THORAKOS 22853 STATE OF TEXAS 5-15-2015

JACOBS/BURNS & McDONNELL

JACOBS/BURNS & MCDONNELL, A JOINT VENTURE
155 NORTH LAKE AVENUE
PASADENA, CA 91101 USA
TEL 1 (817) 735-6000
FAX 1 (817) 735-6148

JEG NO. FDWD7911 A/E INFO

APPROVED
FOR COMMANDER NAVFAC 6/11/2015

ACTIVITY

SATISFACTORY TO DATE

DES	CPC	DRW	MTH	CHK	WRP

PMDM
BRANCH MANAGER
CHIEF ENGR/ARCH
FIRE PROTECTION

NAVAL FACILITIES ENGINEERING COMMAND ~ PACIFIC
JOINT BASE PEARL HARBOR - HICKAM

DEPARTMENT OF THE NAVY
NAVFAC PACIFIC

MARINE CORPS BASE HAWAII
KANEOHE, HAWAII

FY14 MCON PROJECT P-863
AIRCRAFT MAINTENANCE HANGAR UPGRADES

STAIR DETAILS

SCALE AS SHOWN
EPROJECT NO. 862914
CONSTR. CONTR. NO.
NAVFAC DRAWING NO. 19043373
SHEET 108 OF 313

A-422

5/12/2015 7:42:02 AM

SCALE(S) AS NOTED ON THIS SHEET ARE BASED ON FULL SIZE ANSI D (22 x 34) SHEET. DRAWFORM REVISION: 10 MARCH 2009

FINAL DESIGN - 15 MAY 2015

KEYNOTES

129	ELEVATOR PIT LADDER, REFER: 4/A-432
169	EXISTING STRUCTURE; CLEAN AND PAINT EXPOSED PORTIONS
188	4,000 LB TWIN JACK ROPED ELEVATOR
189	ELEVATOR SUMP PIT AND GALVANIZED STEEL GRATE BEYOND
191	2'-0" X 2'-0" GOVERNOR ACCESS PANEL, SILL AT 10'-0" AFF VERIFY WITH MANUFACTURER.
255	CRICKET
272	PROVIDE MASS NOTIFICATION SPEAKER. COORDINATE WITH ELEVATOR SUPPLIER.
275	STEEL STRUCTURE, REFER TO STRUCTURAL
312	CONCRETE HANGAR FLOOR SLAB; REFER STRUCTURAL
426	VAPOR BARRIER
427	ELEVATOR HOIST WAY BEAMS MOUNTED TO STRUCTURE, VERIFY LOCATION, AND CONNECTION DETAILS WITH STRUCTURAL AND MANUFACTURER

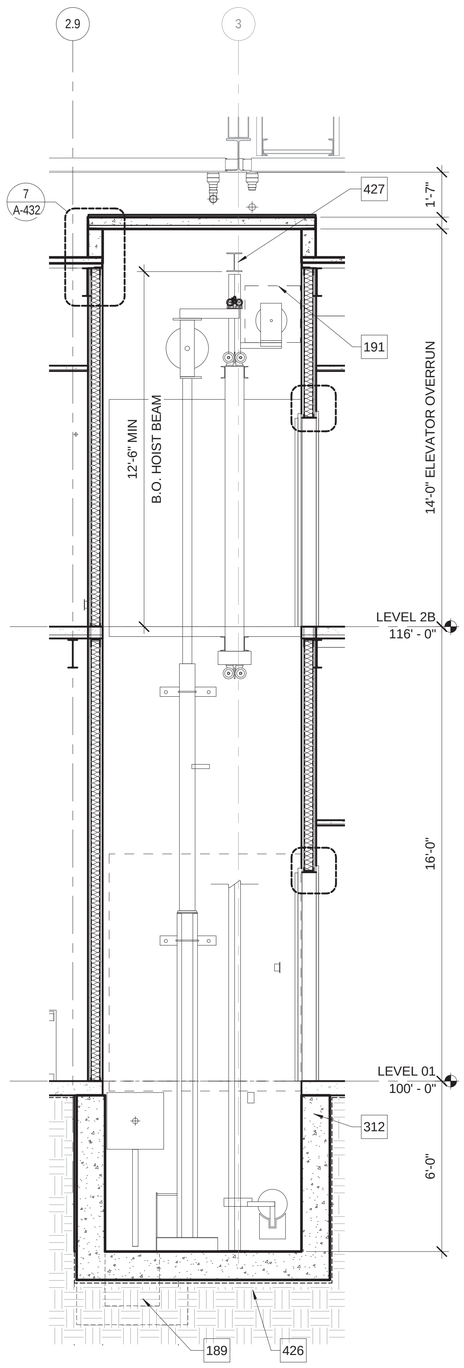

ELEVATOR 134 SECTION
3/8" = 1'-0"
1

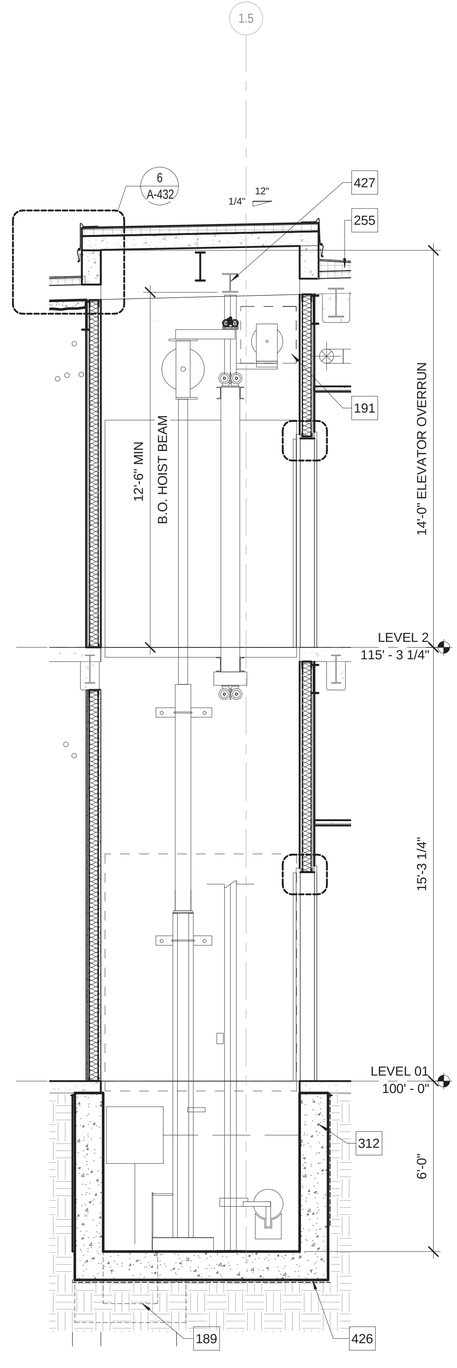

ELEVATORS 105&166 SECTION
3/8" = 1'-0"
A-132
2

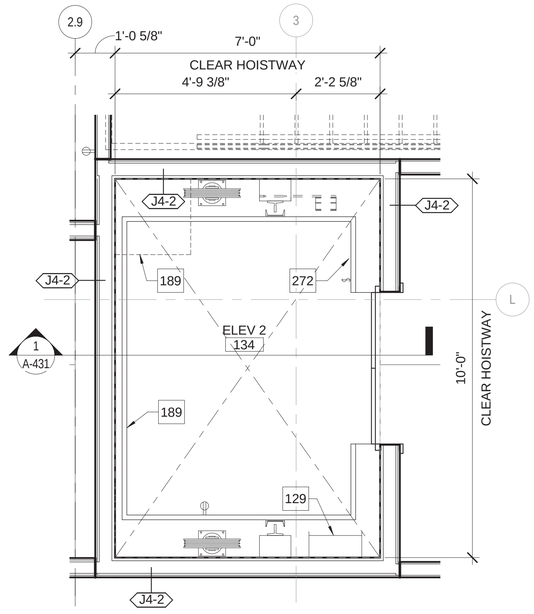

ENLARGED PLAN - ELEV 2
1/2" = 1'-0"
A-103
A-108
3

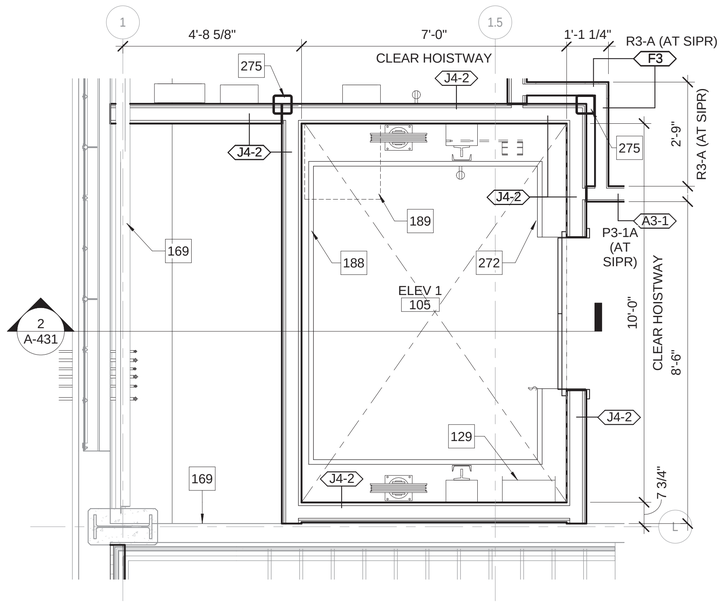

ENLARGED PLAN - ELEV 1&3
1/2" = 1'-0"
A-101 A-107
A-105 A-109
4

SYM	DESCRIPTION	DATE	APPR

NAVFAC

REGISTERED ARCHITECT
THEW THOMAS
25.15.2015
22853
STATE OF TEXAS
SEAL

JACOBS/ Burns & McDonnell

JACOBS/BURNS & MCDONNELL, A JOINT VENTURE
155 NORTH LAKE AVENUE
PASADENA, CA 91101 USA
TEL 1 (817) 735-6000
FAX 1 (817) 735-6148

JEG NO. FDW07911 A/E INFO

APPROVED
FOR COMMANDER NAVFAC 6/11/2015

ACTIVITY

SATISFACTORY TO DATE

DES	CPC	DRW	MTH	CHK	WRP

PM/DM KAD
BRANCH MANAGER
CHIEF ENG/ARCH
FIRE PROTECTION

DEPARTMENT OF THE NAVY
NAVAL FACILITIES ENGINEERING COMMAND ~ PACIFIC
NAVFAC PACIFIC
MARINE CORPS BASE HAWAII
JOINT BASE PEARL HARBOR - HICKAM
KANEOHE, HAWAII

FY14 MCON PROJECT P-863
AIRCRAFT MAINTENANCE HANGAR UPGRADES
ENLARGED ELEVATOR PLANS

SCALE AS SHOWN
EPROJECT NO. 862914
CONSTR. CONTR. NO.
NAVFAC DRAWING NO. 19043374
SHEET 109 OF 313
A-431

SCALE(S) AS NOTED ON THIS SHEET ARE BASED ON FULL SIZE ANSI D (22' x 34') SHEET. DRAWFORM REVISION: 10 MARCH 2009

FINAL DESIGN - 15 MAY 2015

5/12/2015 7:42:09 AM

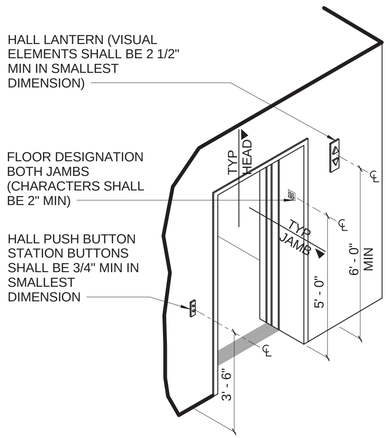

ELEVATOR ENTRY AND MOUNTING HEIGHTS

1 1/2" = 1'-0" A-432 (1)

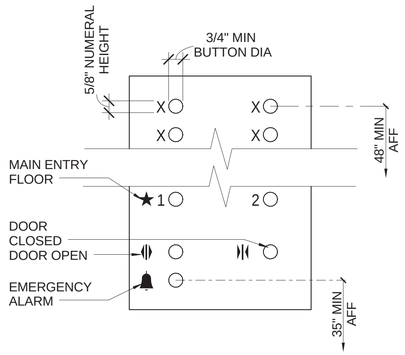

ELEVATOR PANEL DETAIL

3" = 1'-0" A-432 (2)

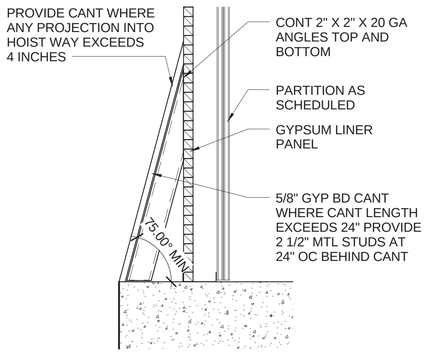

HOISTWAY CANT DETAIL

NTS A-432 (3)

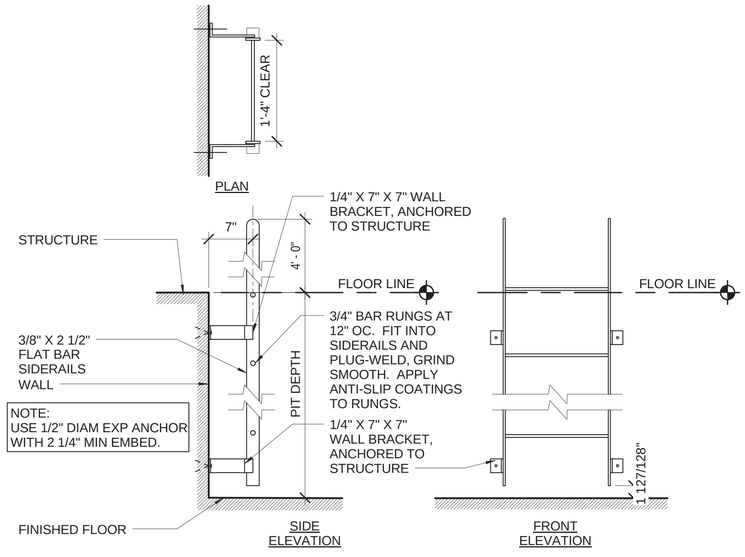

FINISH AFTER FABRICATION: SHOP PRIMER PAINT

ELEVATOR PIT ACCESS LADDER

1" = 1'-0" A-432 (4)

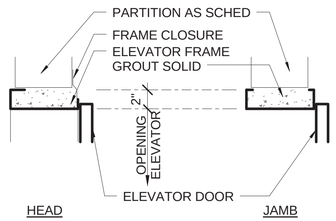

ELEVATOR DOOR DETAILS

1 1/2" = 1'-0" A-431 (5)

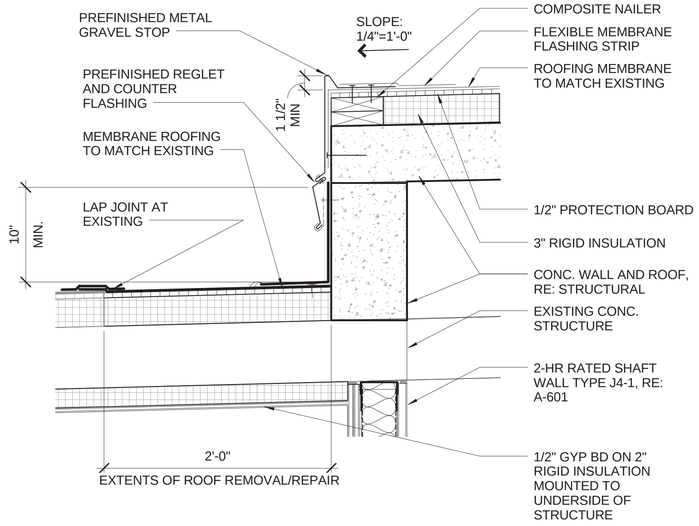

SECTION DETAIL

1 1/2" = 1'-0" A-431 (6)

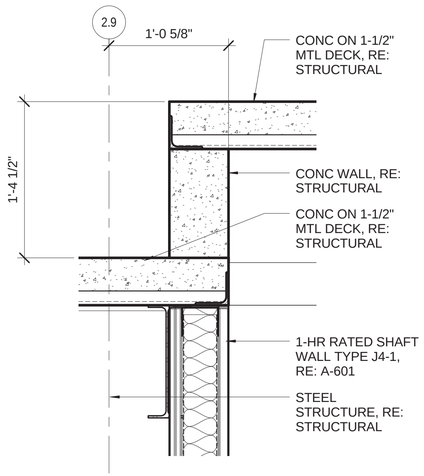

SECTION DETAIL

1 1/2" = 1'-0" A-431 (7)

0 1"
SCALE: 1 1/2" = 1'-0"

APPR | DATE | DESCRIPTION | SYM

NAVFAC

REGISTERED ARCHITECT EVAN THOMAS MINGE 25.15.2015 22853 STATE OF TEXAS

JACOBS/ BURNS & MCDONNELL

JACOBS/BURNS & MCDONNELL, A JOINT VENTURE
155 NORTH LAKE AVENUE
PASADENA, CA 91101 USA
TEL 1 (817) 735-6000
FAX 1 (817) 735-6148

JEG NO. FDWD7911 A/E INFO

APPROVED
FOR COMMANDER NAVFAC 6/11/2015

ACTIVITY

SATISFACTORY TO DATE

DES	CPC	DRW	MTH	CHK	WRP

PWDM
BRANCH MANAGER
CHIEF ENGARCH
FIRE PROTECTION

DEPARTMENT OF THE NAVY
NAVFAC PACIFIC
NAVAL FACILITIES ENGINEERING COMMAND
MARINE CORPS BASE HAWAII
NAVAL FACILITIES ENGINEERING COMMAND ~ PACIFIC
JOINT BASE PEARL HARBOR ~ HICKAM
KANEOHE, HAWAII
FY14 MCON PROJECT P-863
AIRCRAFT MAINTENANCE HANGAR UPGRADES
ELEVATOR DETAILS

SCALE	AS SHOWN
EPROJECT NO.	862914
CONSTR. CONTR. NO.	
NAVFAC DRAWING NO.	19043375
SHEET	110 OF 313

A-432

5/12/2015 7:42:14 AM

SCALE(S) AS NOTED ON THIS SHEET ARE BASED ON FULL SIZE ANSI D (22" x 34") SHEET. DRAWFORM REVISION: 10 MARCH 2009

FINAL EDITION - 15 MAY 2015

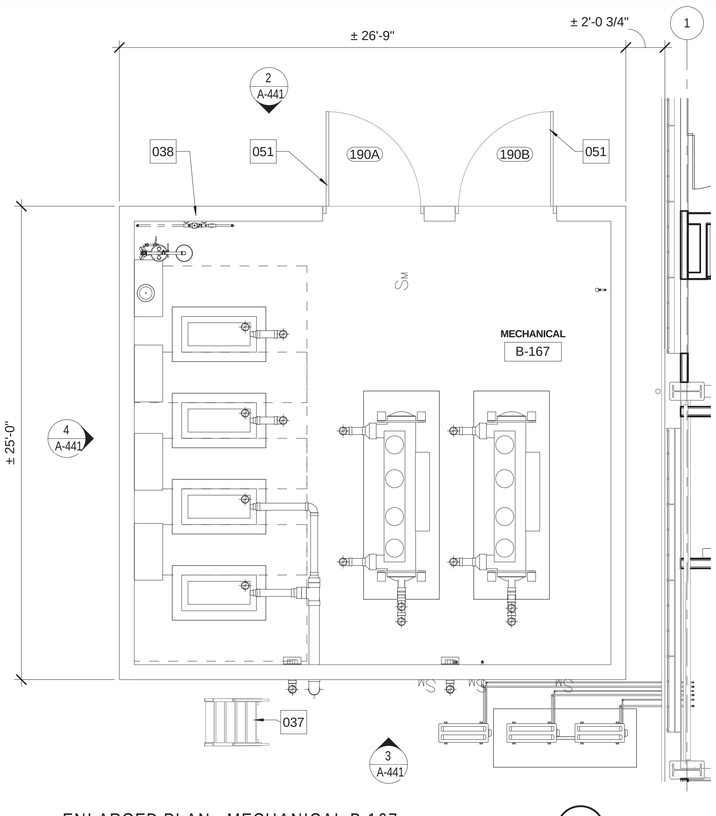

ENLARGED PLAN - MECHANICAL B-167

1/4" = 1'-0" A100 1

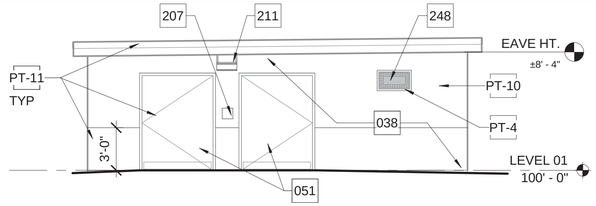

NORTH ELEVATION - MECHANICAL B-167

3/16" = 1'-0" A-441 2

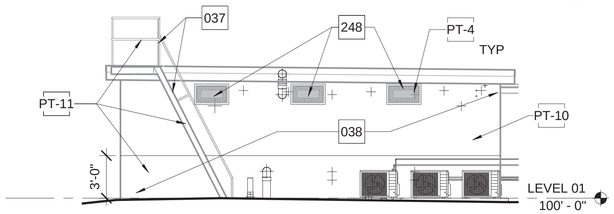

SOUTH ELEVATION - MECHANICAL B-167

3/16" = 1'-0" A-441 3

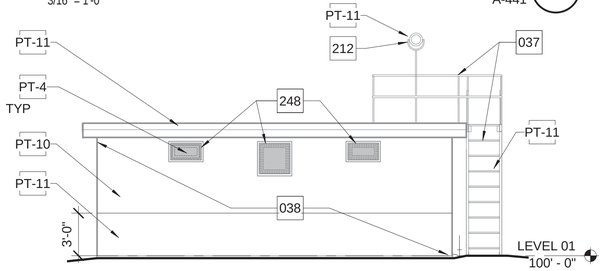

WEST ELEVATION - MECHANICAL B-167

3/16" = 1'-0" A-441 4

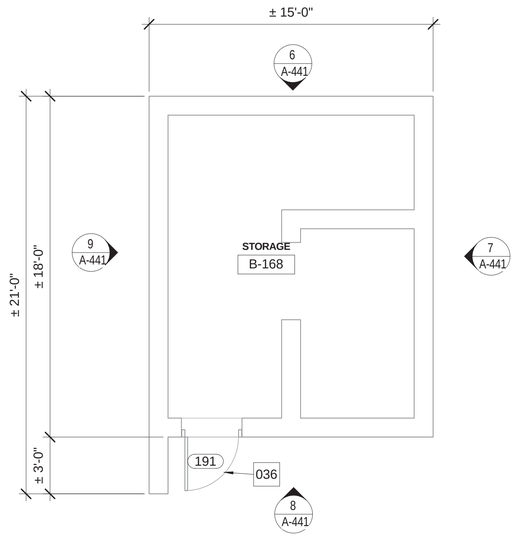

ENLARGED PLAN - STORAGE B-168

1/4" = 1'-0" A-100 5

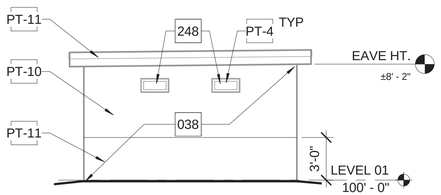

NORTH ELEVATION - STORAGE B-168

3/16" = 1'-0" A-441 6

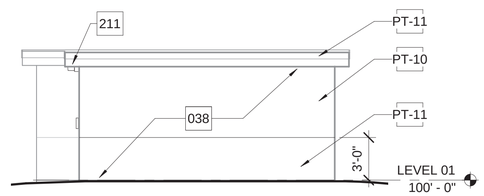

EAST ELEVATION - STORAGE B-168

3/16" = 1'-0" A-441 7

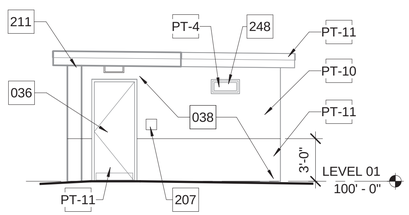

SOUTH ELEVATION - STORAGE B-168

3/16" = 1'-0" A-441 8

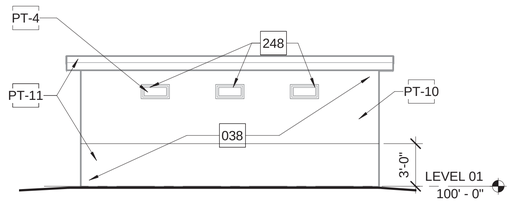

WEST ELEVATION - STORAGE B-168

3/16" = 1'-0" A-441 9

GENERAL NOTES - ENLARGED PLANS

A	REFER TO SHEET A-610 FOR DOOR AND FRAME SCHEDULE.
B	EXISTING CONSTRUCTION SHOWN BASED UPON OWNER FURNISHED PLAN, OWNER FURNISHED SURVEY, AND ON SITE OBSERVATIONS. ANY DISCREPANCIES BETWEEN DRAWINGS AND ACTUAL FIELD CONDITIONS SHALL BE REPORTED TO THE CONTRACTING OFFICER PRIOR TO PROCEEDING WITH WORK.
C	REFER TO A-641 FOR WINDOW AND LOUVER TYPES.
D	ALL DIMENSIONS ARE TO BE FIELD VERIFIED.

KEYNOTES

036	REFURBISH EXISTING STEEL DOORS
037	CLEAN AND PREPARE GUARDRAIL AND STAIR FOR PAINT.
038	CLEAN AND PREPARE EXISTING STRUCTURE FOR PAINT.
051	EXISTING HISTORIC STEEL DOOR TO REMAIN, CLEAN AND PREPARE FOR NEW PAINT.
207	EXTERIOR SIGNAGE; REFER INTERIORS
211	LIGHT FIXTURE; REFER ELECTRICAL
212	EXISTING SPOT LIGHT TO REMAIN
248	EXISTING WINDOW/OPENING AND METAL SCREEN, CLEAN AND PREPARE FOR PAINT. INSTALL INSULATED METAL BLANK-OFF PANEL IN INSIDE FACE OF OPENING.

EXTERIOR FINISH LEGEND

PT-4	AREA OF HISTORIC WINDOW INFILL AND HISTORIC GLAZING AT HANGAR DOORS, PAINT TO MATCH SW6206 OYSTER BAY BY SHERWIN WILLLIAMS
PT-10	PRIMARY COLOR - PAINT TO MATCH FED SPEC#: 23578
PT-11	WAINSCOAT/TRIM COLOR - PAINT TO MATCH FED SPEC#: 20219

APPR. | DATE | DESCRIPTION | SYM

NAVFAC

REGISTERED ARCHITECT — MATTHEW THOMAS CAMPBELL — 22853 — STATE OF TEXAS — 5-15-2015

JACOBS/ BURNS & MCDONNELL

JACOBS/BURNS & MCDONNELL, A JOINT VENTURE
155 NORTH LAKE AVENUE
PASADENA, CA 91101 USA
TEL 1 (817) 735-6000
FAX 1 (817) 735-6148

JEG NO. FDWD7911 A/E INFO

APPROVED
FOR COMMANDER NAVFAC 6/11/2015

ACTIVITY

SATISFACTORY TO DATE

DES	CPC	DRW	MTH	CHK	WRP
PMDM					KAD
BRANCH MANAGER					
CHIEF ENGARCH					
FIRE PROTECTION					

DEPARTMENT OF THE NAVY
NAVFAC PACIFIC
NAVAL FACILITIES ENGINEERING COMMAND ~ PACIFIC
NAVAL FACILITIES ENGINEERING COMMAND
JOINT BASE PEARL HARBOR - HICKAM
MARINE CORPS BASE HAWAII
KANEOHE, HAWAII
FY14 MCON PROJECT P-863
AIRCRAFT MAINTENANCE HANGAR UPGRADES
ANCILLARY BUILDINGS

SCALE AS SHOWN
EPROJECT NO. 862914
CONSTR. CONTR. NO.
NAVFAC DRAWING NO. 19043376
SHEET 111 OF 313

A-441

FINAL DESIGN - 18 MAY 2015

5/12/2015 7:42:31 AM

SCALE(S) AS NOTED ON THIS SHEET ARE BASED ON FULL SIZE ANSI D (22" x 34") SHEET. DRAWFORM REVISION: 10 MARCH 2009

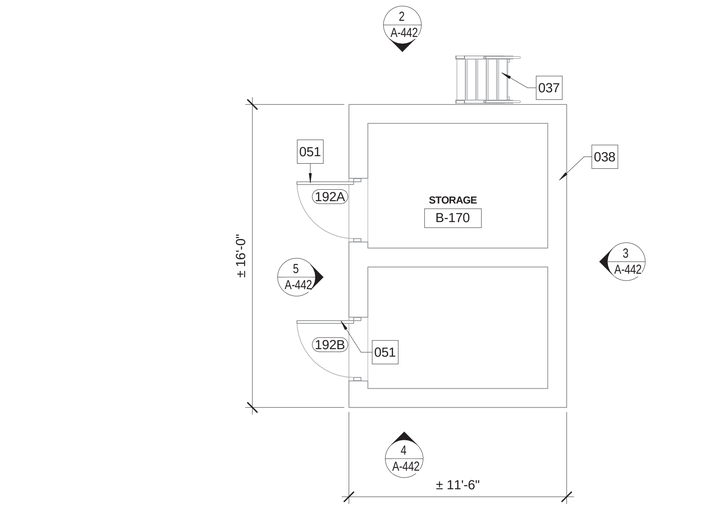

ENLARGED PLAN - STORAGE B-170
1/4" = 1'-0" A-100 1

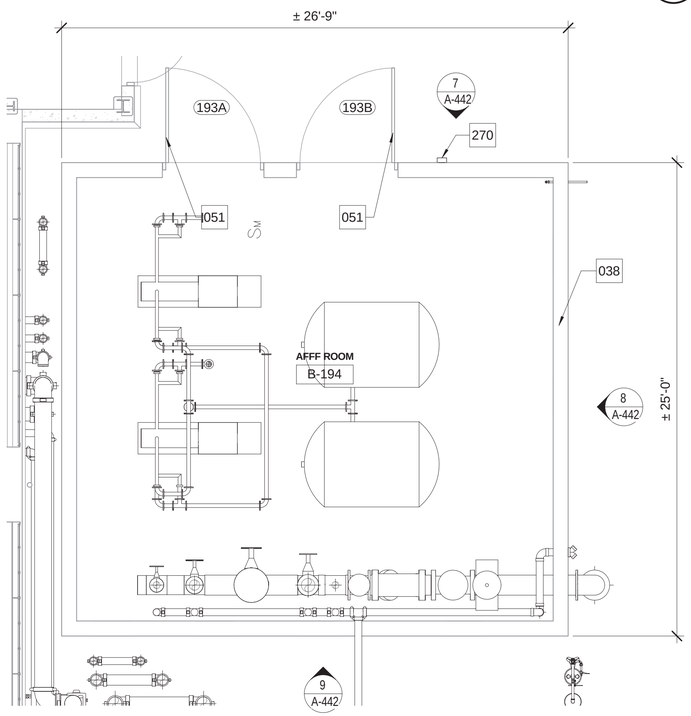

ENLARGED PLAN - AFFF ROOM B-194
1/4" = 1'-0" A-100 6

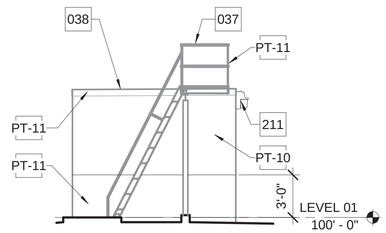

NORTH ELEV - MECH B-170
3/16" = 1'-0" A-442 2

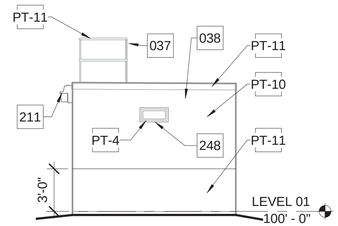

SOUTH ELEV - MECH B-170
3/16" = 1'-0" A-442 4

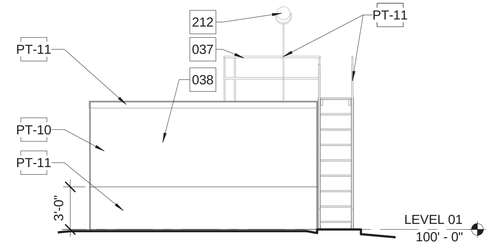

EAST ELEV - MECH B-170
3/16" = 1'-0" A-442 3

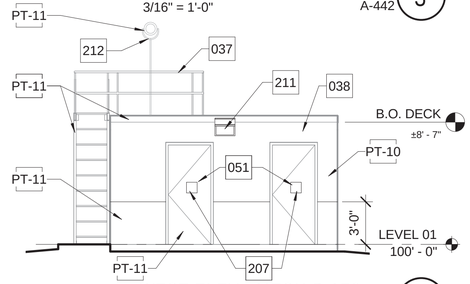

WEST ELEV - MECH B-170
3/16" = 1'-0" A-442 5

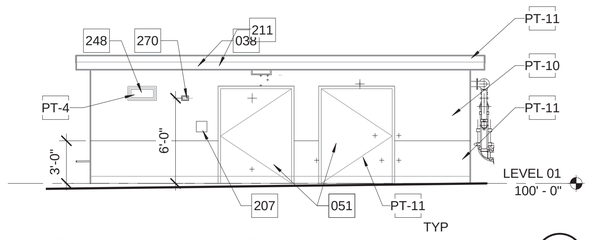

NORTH ELEV - AFFF ROOM B-194
3/16" = 1'-0" A-442 7

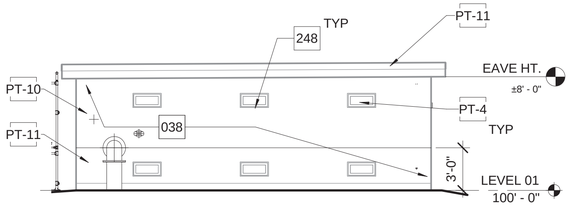

EAST ELEV - AFFF ROOM B-194
3/16" = 1'-0" A-442 8

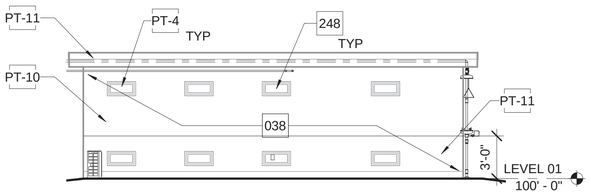

SOUTH ELEV - AFFF ROOM B-194
3/16" = 1'-0" A-442 9

GENERAL NOTES - ENLARGED PLANS

A	REFER TO SHEET A-610 FOR DOOR AND FRAME SCHEDULE.
B	EXISTING CONSTRUCTION SHOWN BASED UPON OWNER FURNISHED PLAN, OWNER FURNISHED SURVEY, AND ON SITE OBSERVATIONS. ANY DISCREPANCIES BETWEEN DRAWINGS AND ACTUAL FIELD CONDITIONS SHALL BE REPORTED TO THE CONTRACTING OFFICER PRIOR TO PROCEEDING WITH WORK.
C	REFER TO A-641 FOR WINDOW AND LOUVER TYPES.
D	ALL DIMENSIONS ARE TO BE FIELD VERIFIED.

KEYNOTES

036	REFURBISH EXISTING STEEL DOORS
037	CLEAN AND PREPARE GUARDRAIL AND STAIR FOR PAINT.
038	CLEAN AND PREPARE EXISTING STRUCTURE FOR PAINT.
051	EXISTING HISTORIC STEEL DOOR TO REMAIN, CLEAN AND PREPARE FOR NEW PAINT.
207	EXTERIOR SIGNAGE; REFER INTERIORS
211	LIGHT FIXTURE; REFER ELECTRICAL
212	EXISTING SPOT LIGHT TO REMAIN
248	EXISTING WINDOW/OPENING AND METAL SCREEN, CLEAN AND PREPARE FOR PAINT. INSTALL INSULATED METAL BLANK-OFF PANEL IN INSIDE FACE OF OPENING.
270	EXTERIOR SEMI-RECESSED KNOX BOX SERIES #3275; MOUNT AT 6'-0" AFF

EXTERIOR FINISH LEGEND

PT-4	AREA OF HISTORIC WINDOW INFILL AND HISTORIC GLAZING AT HANGAR DOORS, PAINT TO MATCH SW6206 OYSTER BAY BY SHERWIN WILLLIAMS
PT-10	PRIMARY COLOR - PAINT TO MATCH FED SPEC#: 23578
PT-11	WAINSCOAT/TRIM COLOR - PAINT TO MATCH FED SPEC#: 20219

NO.	DESCRIPTION	DATE	APPR
STM			

NAVFAC

REGISTERED ARCHITECT — MATTHEW THOMAS — 22853 — STATE OF TEXAS — 05.15.2015

JACOBS/BURNS & MCDONNELL

JACOBS/BURNS & MCDONNELL, A JOINT VENTURE
155 NORTH LAKE AVENUE
PASADENA, CA 91101 USA
TEL 1 (817) 735-6000
FAX 1 (817) 735-6148

JEG NO. FDWD7911 A/E INFO

APPROVED
FOR COMMANDER NAVFAC 6/11/2015

ACTIVITY

SATISFACTORY TO DATE

DES	CPC	DRW	MTH	CHK	WRP

PMDM KAD
BRANCH MANAGER
CHIEF ENG/ARCH
FIRE PROTECTION

DEPARTMENT OF THE NAVY
NAVFAC PACIFIC
NAVAL FACILITIES ENGINEERING COMMAND – PACIFIC
NAVAL FACILITIES ENGINEERING COMMAND
JOINT BASE PEARL HARBOR - HICKAM
MARINE CORPS BASE HAWAII
KANEOHE, HAWAII
FY14 MCON PROJECT P-863
AIRCRAFT MAINTENANCE HANGAR UPGRADES
ANCILLARY BUILDINGS

SCALE AS SHOWN
EPROJECT NO. 862914
CONSTR. CONTR. NO.
NAVFAC DRAWING NO. 19043377
SHEET 112 OF 313

A-442

FINAL DESIGN - 15 MAY 2015

5/12/2015 7:42:47 AM

SCALE(S) AS NOTED ON THIS SHEET ARE BASED ON FULL SIZE ANSI D (22" x 34") SHEET. DRAWFORM REVISION: 10 MARCH 2009

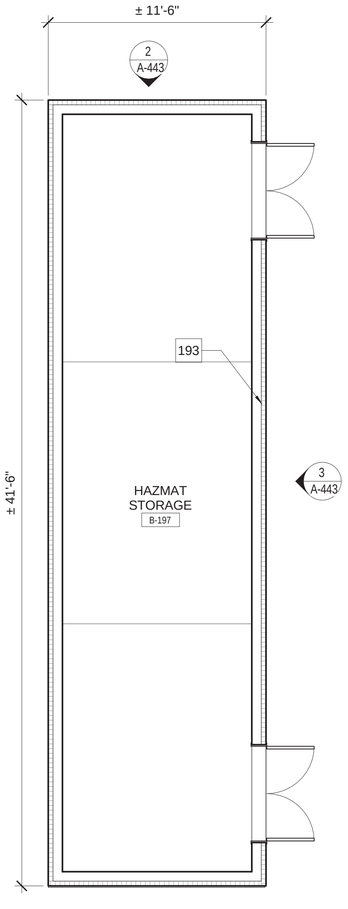

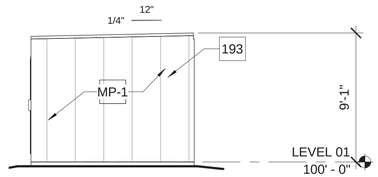

NORTH ELEVATION HAZMAT STORAGE B-197
3/16" = 1'-0" A-443 (2)

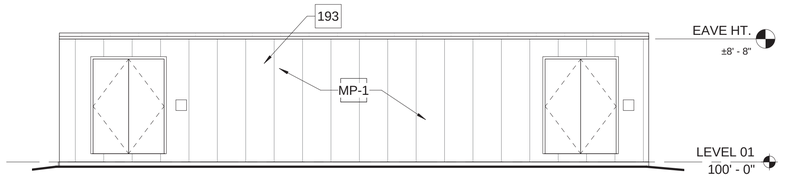

EAST ELEVATION HAZMAT STORAGE B-197
3/16" = 1'-0" A-443 (3)

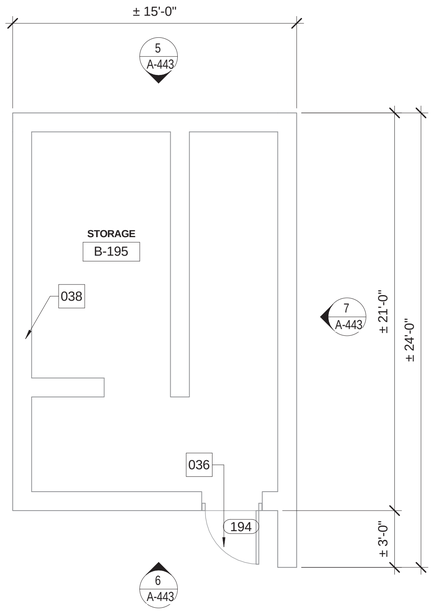

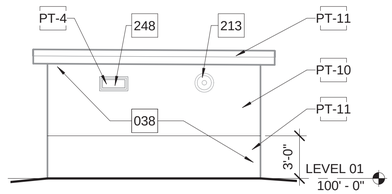

NORTH ELEVATION STORAGE B-195
3/16" = 1'-0" A-443 (5)

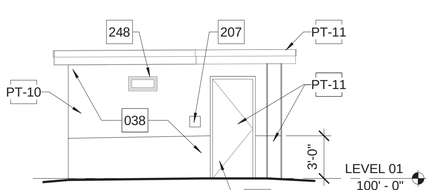

SOUTH ELEVATION STORAGE B-195
3/16" = 1'-0" A-443 (6)

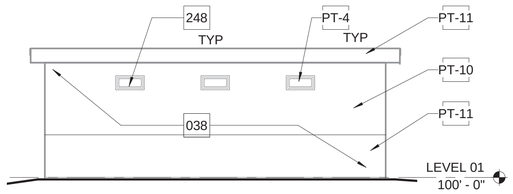

ENLARGED PLAN - HAZMAT STORAGE B-196
1/4" = 1'-0" A-100 (1)

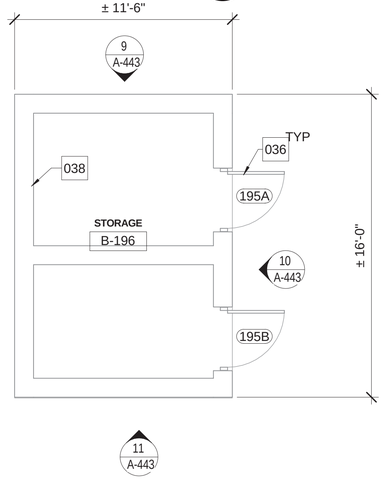

ENLARGED PLAN - STORAGE B-196
1/4" = 1'-0" A-100 (8)

ENLARGED PLAN - STORAGE B-195
1/4" = 1'-0" A-100 (4)

EAST ELEVATION STORAGE B-195
3/16" = 1'-0" A-443 (7)

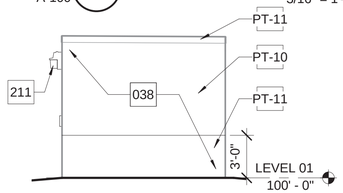

NORTH ELEVATION STORAGE B-196
3/16" = 1'-0" A-443 (9)

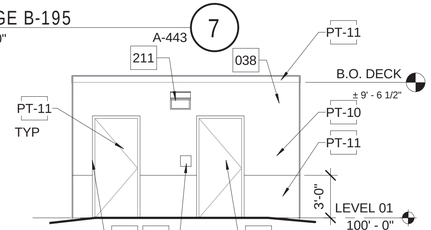

EAST ELEVATION STORAGE B-196
3/16" = 1'-0" A-443 (10)

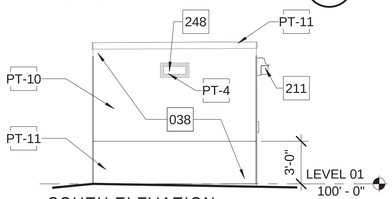

SOUTH ELEVATION STORAGE B-196
3/16" = 1'-0" A-443 (11)

GENERAL NOTES - ENLARGED PLANS

A	REFER TO SHEET A-610 FOR DOOR AND FRAME SCHEDULE.
B	EXISTING CONSTRUCTION SHOWN BASED UPON OWNER FURNISHED PLAN, OWNER FURNISHED SURVEY, AND ON SITE OBSERVATIONS. ANY DISCREPANCIES BETWEEN DRAWINGS AND ACTUAL FIELD CONDITIONS SHALL BE REPORTED TO THE CONTRACTING OFFICER PRIOR TO PROCEEDING WITH WORK.
C	REFER TO A-641 FOR WINDOW AND LOUVER TYPES.
D	ALL DIMENSIONS ARE TO BE FIELD VERIFIED.

KEYNOTES

036	REFURBISH EXISTING STEEL DOORS
038	CLEAN AND PREPARE EXISTING STRUCTURE FOR PAINT.
193	PREFABRICATED METAL BUILDING
207	EXTERIOR SIGNAGE; REFER INTERIORS
211	LIGHT FIXTURE; REFER ELECTRICAL
213	EXISTING MECHANICAL TO REMAIN
248	EXISTING WINDOW/OPENING AND METAL SCREEN, CLEAN AND PREPARE FOR PAINT. INSTALL INSULATED METAL BLANK-OFF PANEL IN INSIDE FACE OF OPENING.

EXTERIOR FINISH LEGEND

MP-1	METAL WALL PANEL - TO MATCH PT-11
PT-4	AREA OF HISTORIC WINDOW INFILL AND HISTORIC GLAZING AT HANGAR DOORS, PAINT TO MATCH SW6206 OYSTER BAY BY SHERWIN WILLLIAMS
PT-10	PRIMARY COLOR - PAINT TO MATCH FED SPEC#: 23578
PT-11	WAINSCOAT/TRIM COLOR - PAINT TO MATCH FED SPEC#: 20219

APPR. | DATE | DESCRIPTION | SYM

NAVFAC

REGISTERED ARCHITECT — MATTHEW THORNBERRY — 22853 — STATE OF TEXAS — 5.15.2015

JACOBS/BURNS & MCDONNELL

JACOBS/BURNS & MCDONNELL, A JOINT VENTURE
155 NORTH LAKE AVENUE
PASADENA, CA 91101 USA
TEL 1 (817) 735-6000
FAX 1 (817) 735-6148

JEG NO. FDWD7911 A/E INFO

APPROVED
FOR COMMANDER NAVFAC 6/11/2015

ACTIVITY

SATISFACTORY TO DATE

DES	CPC	DRW	MTH	CHK	WRP

PM/DM KAD
BRANCH MANAGER
CHIEF ENGARCH
FIRE PROTECTION

DEPARTMENT OF THE NAVY
NAVFAC PACIFIC
MARINE CORPS BASE HAWAII
NAVAL FACILITIES ENGINEERING COMMAND – PACIFIC
JOINT BASE PEARL HARBOR – HICKAM
KANEOHE, HAWAII

FY14 MCON PROJECT P-863
AIRCRAFT MAINTENANCE HANGAR UPGRADES
ANCILLARY BUILDINGS

SCALE AS SHOWN
EPROJECT NO. 862914
CONSTR. CONTR. NO.
NAVFAC DRAWING NO. 19043378
SHEET 113 OF 313

A-443

FINAL DESIGN - 15 MAY 2015

5/12/2015 7:43:04 AM

SCALE(S) AS NOTED ON THIS SHEET ARE BASED ON FULL SIZE ANSI D (22" x 34") SHEET. DRAWFORM REVISION: 10 MARCH 2009

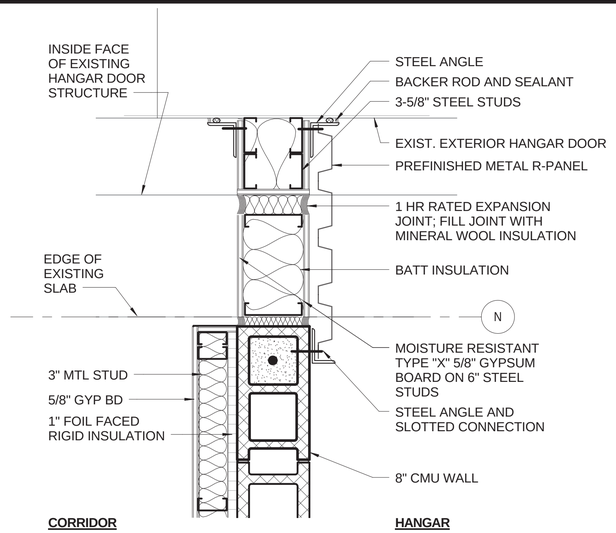

PLAN DETAIL
1 1/2" = 1'-0"
A-103
A-104
1

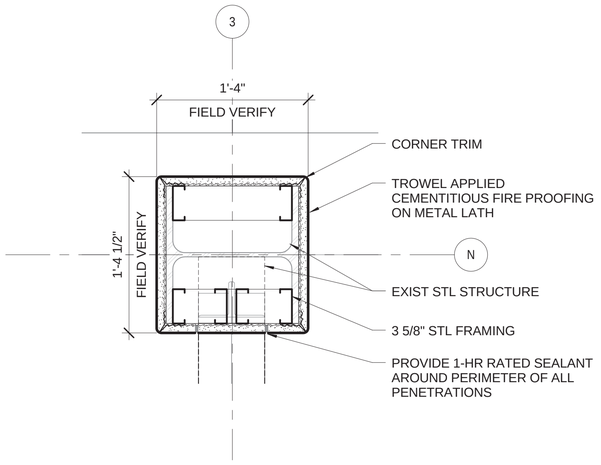

PLAN DETAIL
1 1/2" = 1'-0"
A-103
A-104
2

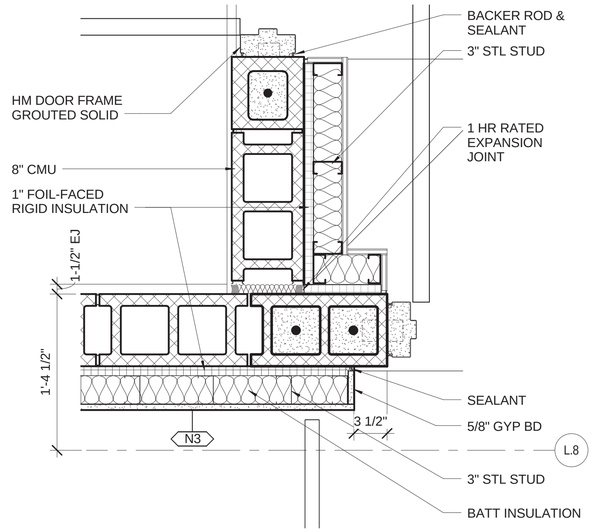

PLAN DETAIL
1 1/2" = 1'-0"
A-103
3

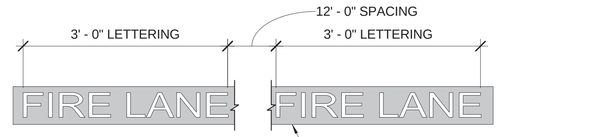

FIRE LANE FLOOR MARKING
1" = 1'-0"
A-141
6

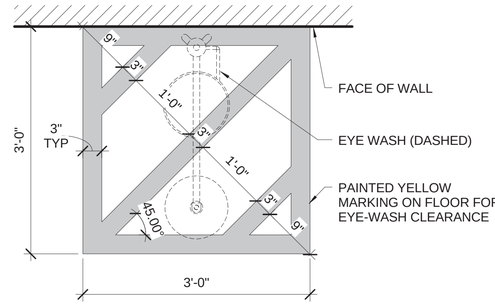

PLAN VIEW

EYE-WASH CLEARANCE FLOOR MARKING
1" = 1'-0"
A-141
7

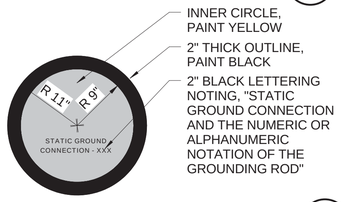

GROUNDING POINT DETAIL
1" = 1'-0"
A-141
8

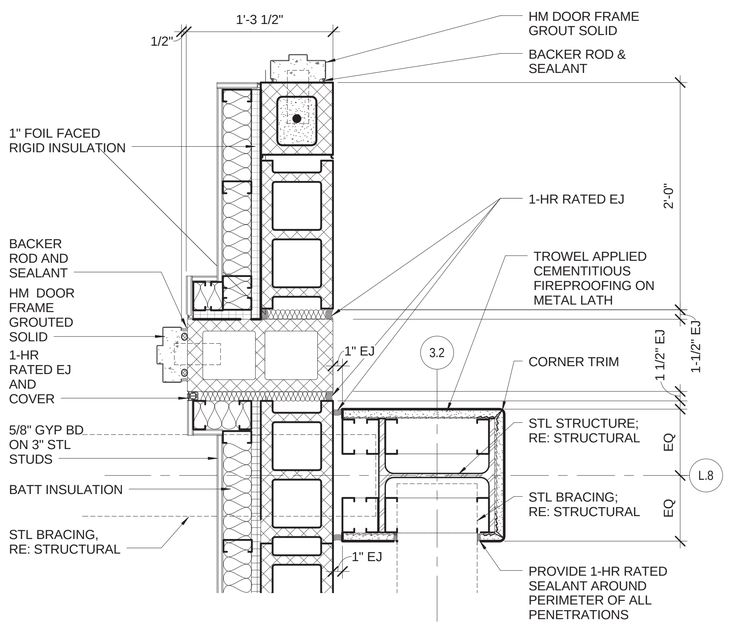

PLAN DETAIL
1 1/2" = 1'-0"
A-103
4

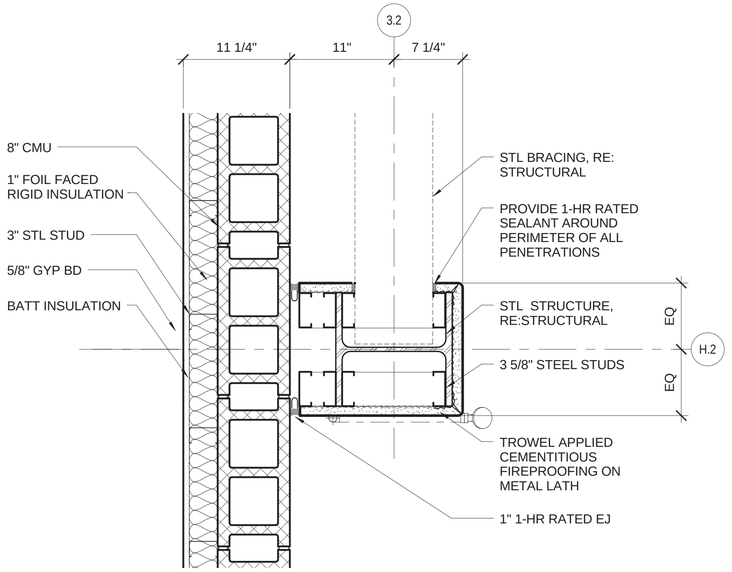

PLAN DETAIL
1 1/2" = 1'-0"
A-103
5

JACOBS/BURNS & MCDONNELL, A JOINT VENTURE
155 NORTH LAKE AVENUE
PASADENA, CA 91101 USA
TEL 1 (817) 735-6000
FAX 1 (817) 735-6148

JEG NO. FDWD7911 A/E INFO

APPROVED
FOR COMMANDER NAVFAC 6/11/2015

ACTIVITY

SATISFACTORY TO DATE

DES	CPC	DRW	MTH	CHK	WRP
PMDM					KAD
BRANCH MANAGER					jm
CHIEF ENGARCH					
FIRE PROTECTION					jc

DEPARTMENT OF THE NAVY
NAVFAC PACIFIC
NAVAL FACILITIES ENGINEERING COMMAND – PACIFIC
NAVAL FACILITIES ENGINEERING COMMAND
JOINT BASE PEARL HARBOR - HICKAM
MARINE CORPS BASE HAWAII
KANEOHE, HAWAII
FY14 MCON PROJECT P-863
AIRCRAFT MAINTENANCE HANGAR UPGRADES
PLAN DETAILS

SCALE	AS SHOWN
EPROJECT NO.	862914
CONSTR. CONTR. NO.	
NAVFAC DRAWING NO.	19043379
SHEET	114 OF 313

A-501

APPR	DATE	DESCRIPTION	SYM

FINAL DESIGN - 15 MAY 2015

5/12/2015 7:43:12 AM

SCALE(S) AS NOTED ON THIS SHEET ARE BASED ON FULL SIZE ANSI D (22" x 34") SHEET. DRAWFORM REVISION: 10 MARCH 2009

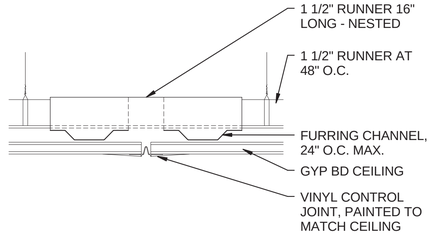

GYP CEILING CONTROL JOINT
3" = 1'-0" A-511 (1)

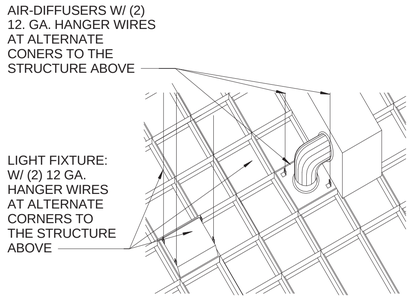

FIXTURE BRACING DETAIL1
N.T.S. A-511 (2)

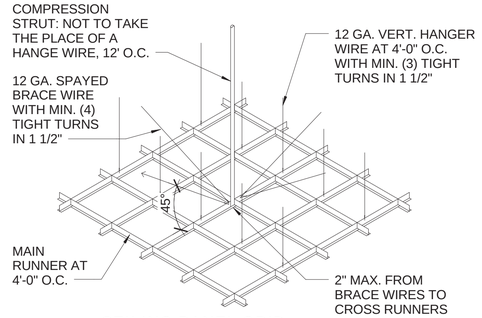

CEILING PANEL GRID SYSTEM
N.T.S. A-511 (3)

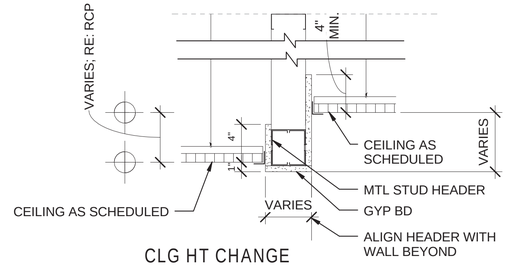

CLG HT CHANGE TRANSITION DTL
1 1/2" = 1'-0" A-511 (4)

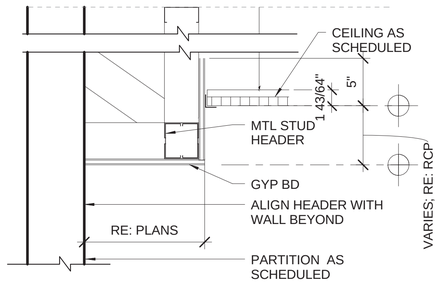

SOFFIT SECTION
1 1/2" = 1'-0" A-511 (5)

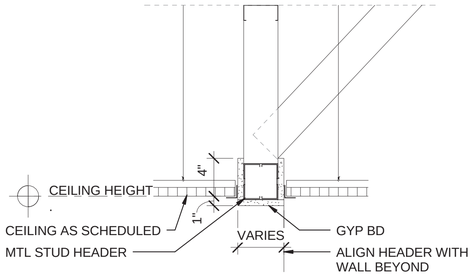

CEILING TRANSITION DETAIL
1 1/2" = 1'-0" A-511 (6)

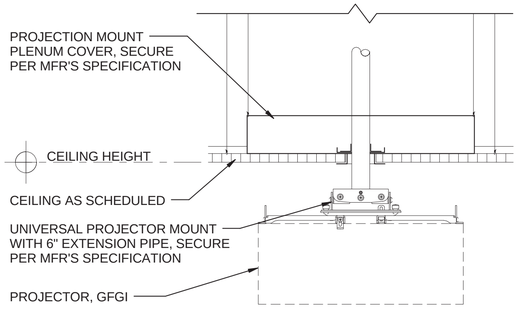

PROJECTOR MOUNTING DETAIL
1 1/2" = 1'-0" A-511 (7)

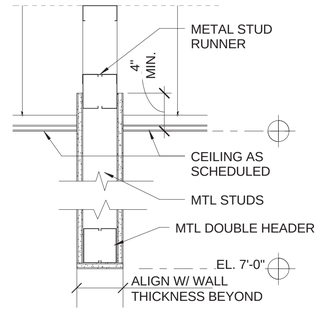

SHOWER/ LOCKER RM HEADER
1 1/2" = 1'-0" A-511 (8)

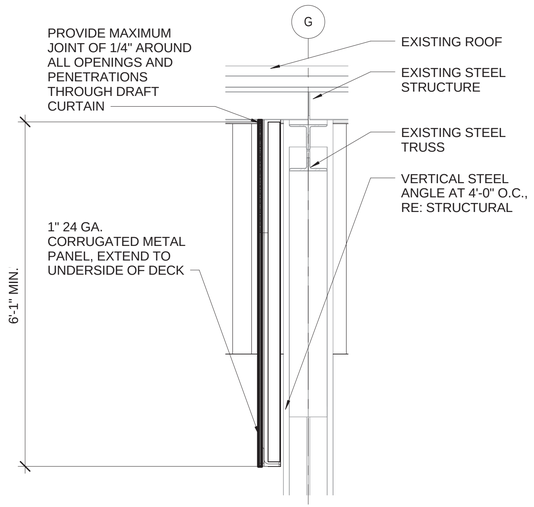

DRAFT CURTAIN DETAIL
1/2" = 1'-0" A-301 (9)

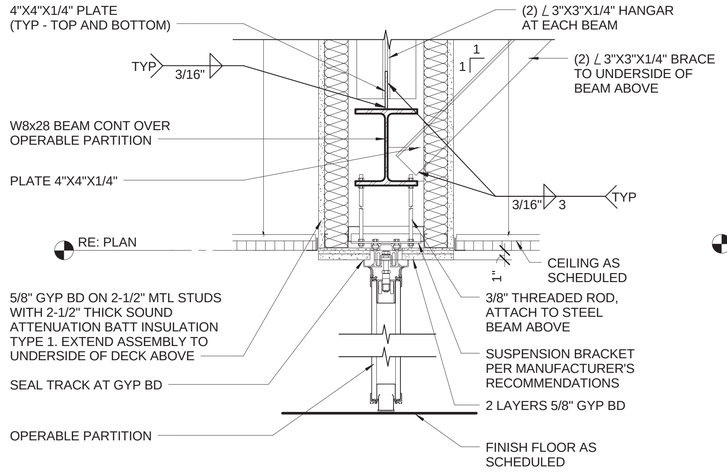

OPERABLE PARTITION DETAIL
1 1/2" = 1'-0" A-125 (10)

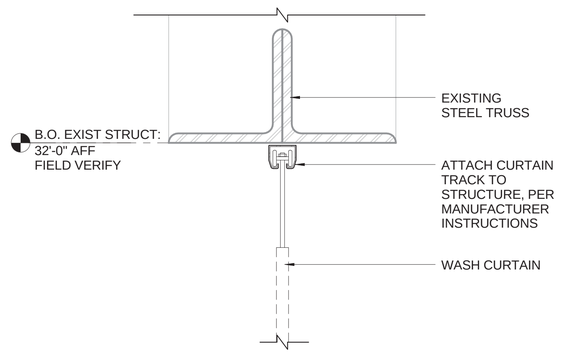

WASH CURTAIN DETAIL
3" = 1'-0" A-101 A-120 (11)

SCALE: 1/2"=1'-0"
SCALE: 3"=1'-0"
SCALE: 1 1/2" = 1'-0"

APPR. | DATE | DESCRIPTION | SYM

NAVFAC

REGISTERED ARCHITECT MATTHEW THOMAS PHILLIPS 22853 STATE OF TEXAS 5.15.2015

JACOBS/ BURNS & MCDONNELL

JACOBS/BURNS & MCDONNELL, A JOINT VENTURE
155 NORTH LAKE AVENUE
PASADENA, CA 91101 USA
TEL 1 (817) 735-6000
FAX 1 (817) 735-6148

JEG NO. FDWD7911 A/E INFO

APPROVED
FOR COMMANDER NAVFAC 6/11/2015

ACTIVITY

SATISFACTORY TO DATE

DES	CPC	DRW	MTH	CHK	WRP

PMDM KAP
BRANCH MANAGER PM
CHIEF ENGARCH
FIRE PROTECTION JL

DEPARTMENT OF THE NAVY
NAVFAC PACIFIC
NAVAL FACILITIES ENGINEERING COMMAND – PACIFIC
NAVAL FACILITIES ENGINEERING COMMAND
JOINT BASE PEARL HARBOR - HICKAM
MARINE CORPS BASE HAWAII
KANEOHE, HAWAII
FY14 MCON PROJECT P-863
AIRCRAFT MAINTENANCE HANGAR UPGRADES
CEILING DETAILS

SCALE AS SHOWN
EPROJECT NO. 862914
CONSTR. CONTR. NO.
NAVFAC DRAWING NO. 19043380
SHEET 115 OF 313

A-511

FINAL DESIGN - 15 MAY 2015

5/12/2015 7:43:31 AM

SCALE(S) AS NOTED ON THIS SHEET ARE BASED ON FULL SIZE ANSI D (22" x 34") SHEET. DRAWFORM REVISION: 10 MARCH 2009

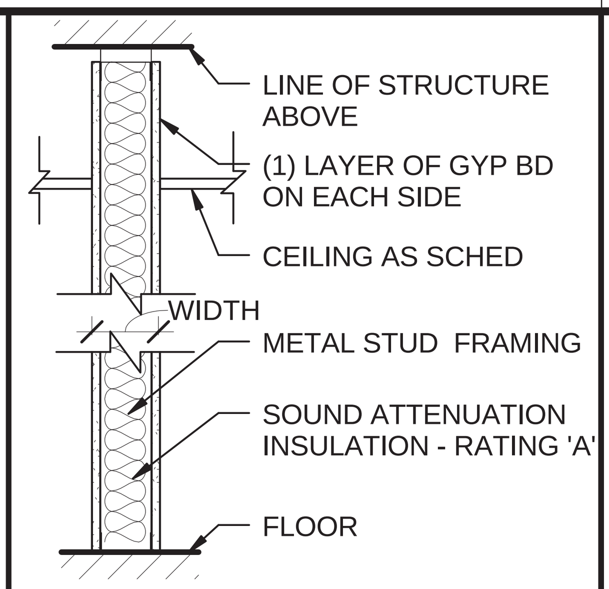

TYPE A

SIZE INDICATOR		
IND	STUD SIZE	TOTAL WIDTH
2	2 1/2"	3 3/4"
3	3 5/8"	4 7/8"
4	4"	5 1/4"
6	6"	7 1/4"
8	8"	9 1/4"

RATING	
	NO RATING-NO INSULATION
1	1 HR FIRE RATED UL# U419
A	ACOUSTICAL - STC 49
S	SMOKE

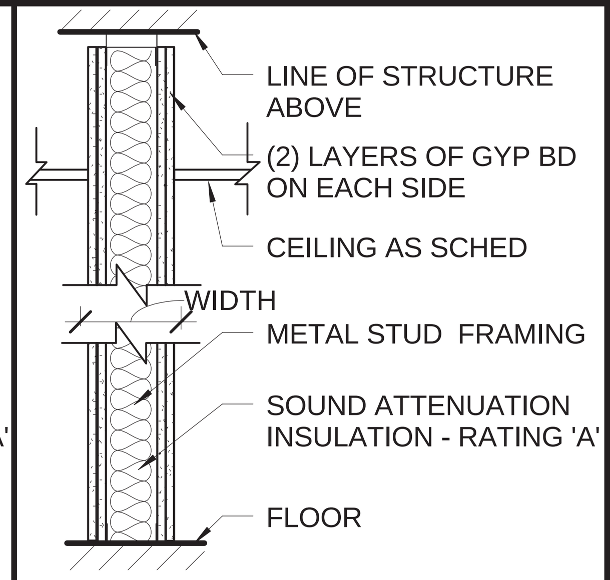

TYPE B

SIZE INDICATOR		
IND	STUD SIZE	TOTAL WIDTH
2	2 1/2"	5"
3	3 5/8"	6 1/8"
4	4"	6 1/2"
6	6"	8 1/2"
8	8"	10 1/2"

RATING	
	NO RATING-NO INSULATION
2	2 HR FIRE RATED-UL# U419
A	ACOUSTICAL - STC 55
S	SMOKE

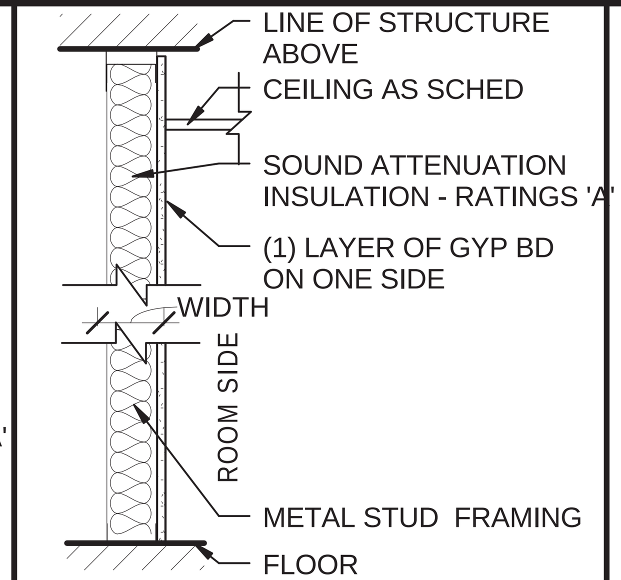

TYPE E

SIZE INDICATOR		
IND	STUD SIZE	TOTAL WIDTH
2	2 1/2"	3 1/8"
3	3 5/8"	4 1/4"
4	4"	4 5/8"
6	6"	6 5/8"
8	8"	8 5/8"

RATING	
	NO RATING-NO INSULATION
A	ACOUSTICAL - STC 49
S	SMOKE

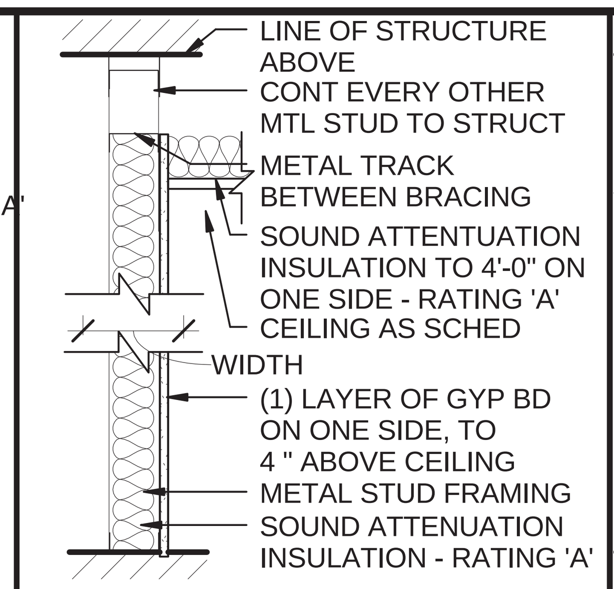

TYPE F

SIZE INDICATOR		
IND	STUD SIZE	TOTAL WIDTH
2	2 1/2"	3 1/8"
3	3 5/8"	4 1/4"
4	4"	4 5/8"
6	6"	6 5/8"
8	8"	8 5/8"

RATING	
	NO RATING-INSULATION
A	ACOUSTICAL

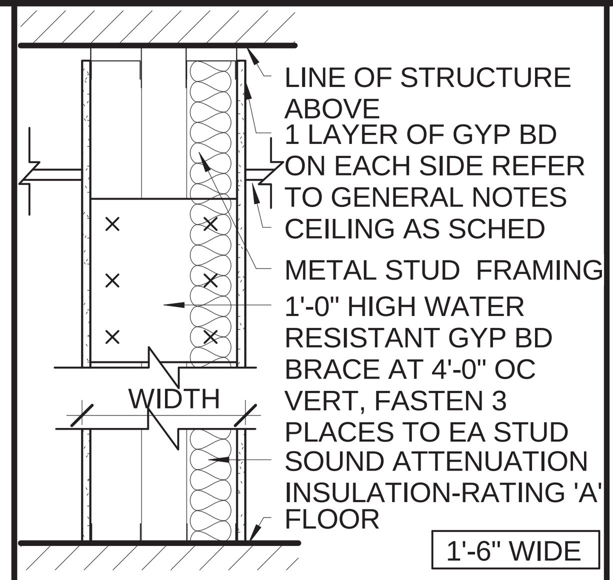

TYPE G

SIZE INDICATOR		
IND	STUD SIZE	TOTAL WIDTH
2	2 1/2"	1'-6"
3	3 5/8"	1'-6"
4	4"	1'-6"
6	6"	1'-6"

RATING	
	NO RATING-NO INSULATION
A	ACOUSTICAL - STC 52
S	SMOKE

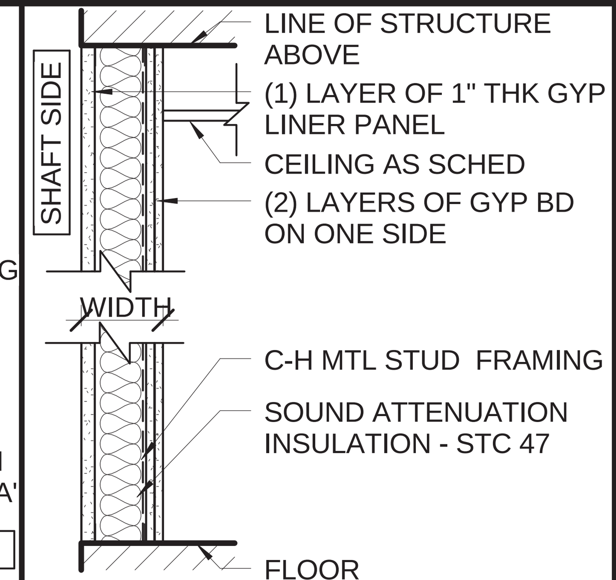

TYPE J

SIZE INDICATOR		
IND	STUD SIZE	TOTAL WIDTH
2	2 1/2"	3 3/4"
4	4"	5 1/4"
6	6"	7 1/4"

RATING	
	NO RATING-NO INSULATION
1	1 HR FIRE-UL# U415; SYS A
2	2 HR FIRE-UL# U415; SYS B

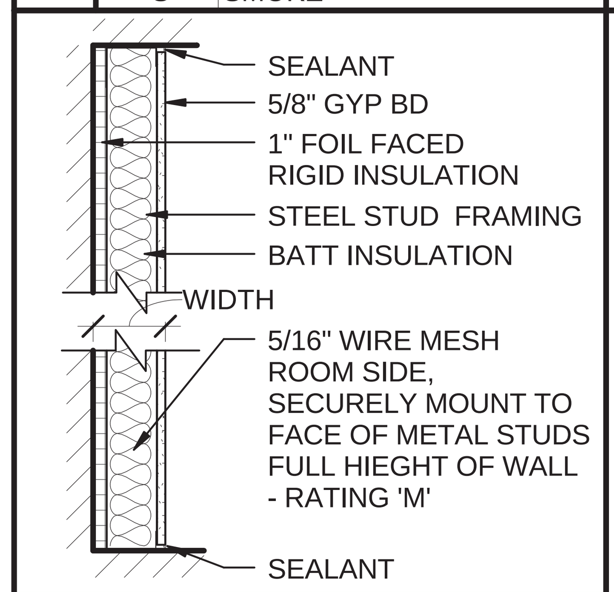

TYPE N

SIZE INDICATOR		
IND	STUD SIZE	TOTAL WIDTH
3	3"	4 5/8"
6	6"	7 5/8"

RATING	
	NO RATING-NO INSULATION
A	ACOUSTICAL - 49

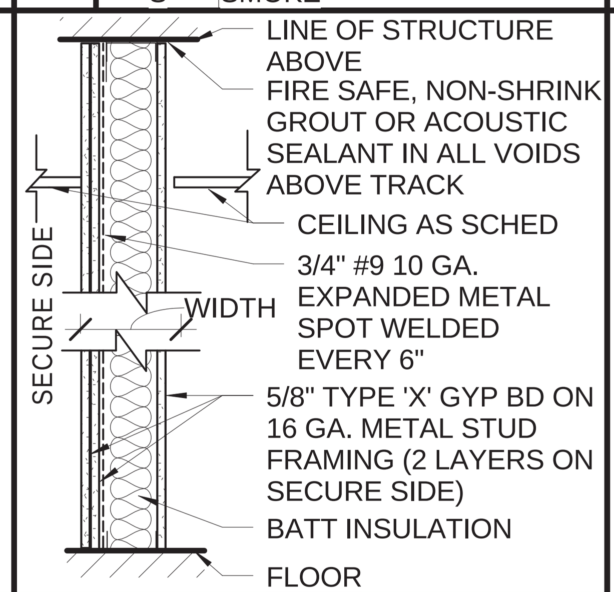

TYPE P

SIZE INDICATOR		
IND	STUD SIZE	TOTAL WIDTH
3	3 5/8"	5 5/8"
6	6"	8"

RATING	
	NO RATING-NO INSULATION
1	1 HR FIRE RATED UL# U419
A	ACOUSTICAL - STC 55

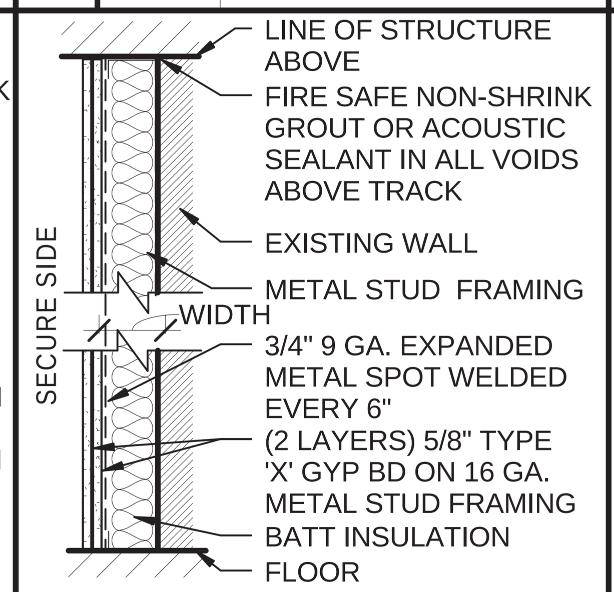

TYPE R

SIZE INDICATOR		
IND	STUD SIZE	TOTAL WIDTH
3	3 5/8"	5"

RATING	
	NO RATING-NO INSULATION
A	ACOUSTICAL - STC 55

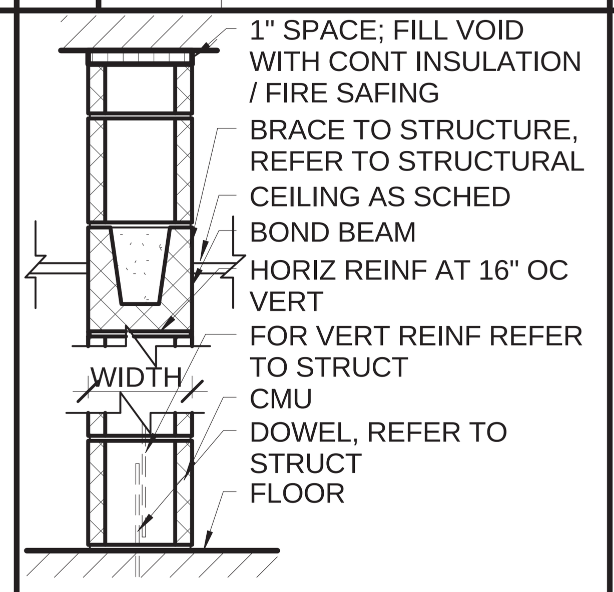

TYPE U

SIZE INDICATOR		
IND	CMU SIZE	TOTAL WIDTH
6	5 5/8"	5 5/8"
8	7 5/8"	7 5/8"
12	11 5/8"	11 5/8"

RATING	
	NO RATING
1	1 HR FIRE RATED UL# U905
2	2 HR FIRE RATED UL# U905

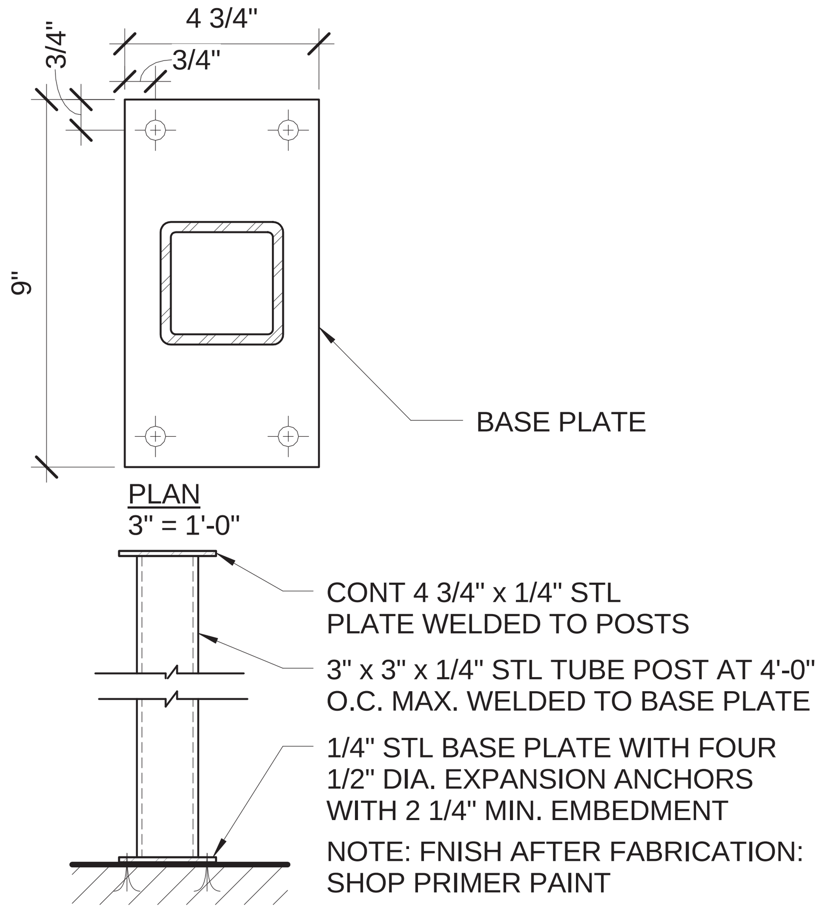

8 A-601 FREESTANDING PARTITION SUPPORT
1 1/2" = 1'-0"

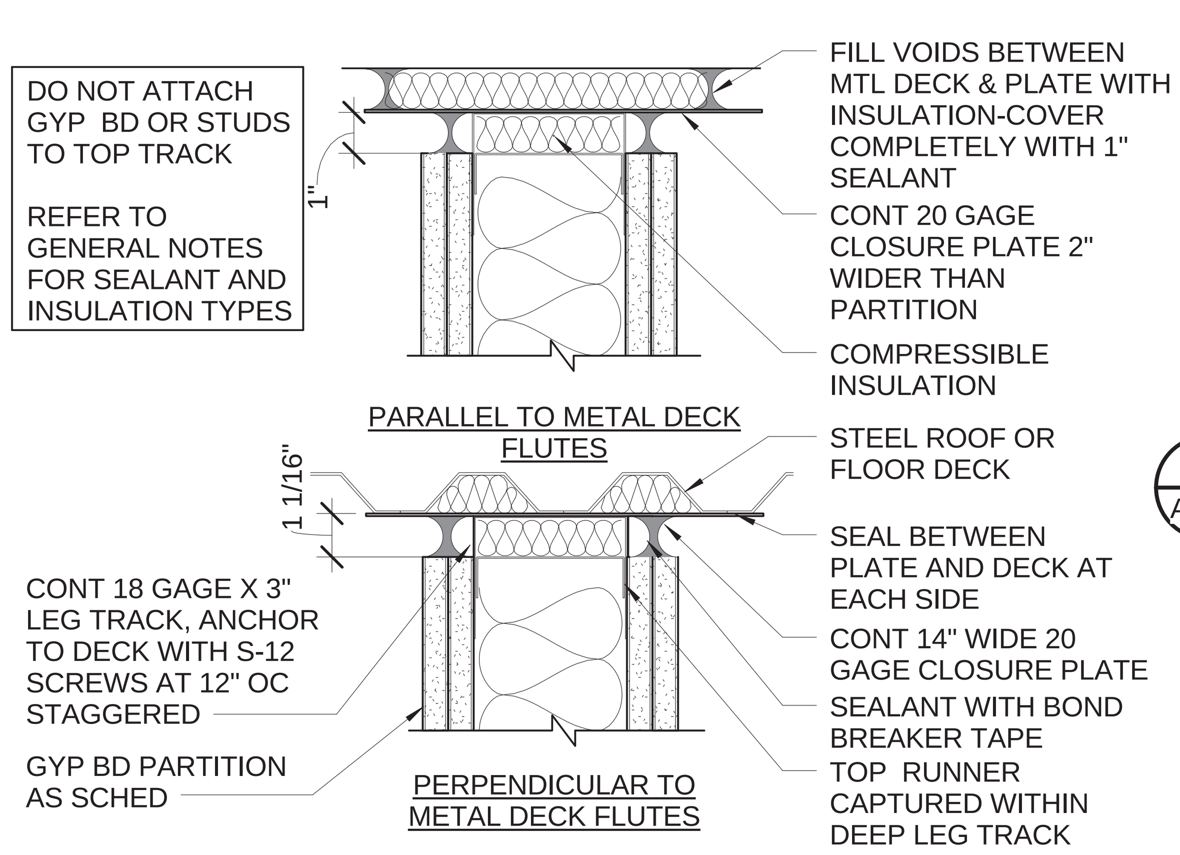

1 A-601 TYP TOP OF GYP BD WALL CONNECTION
3" = 1'-0"

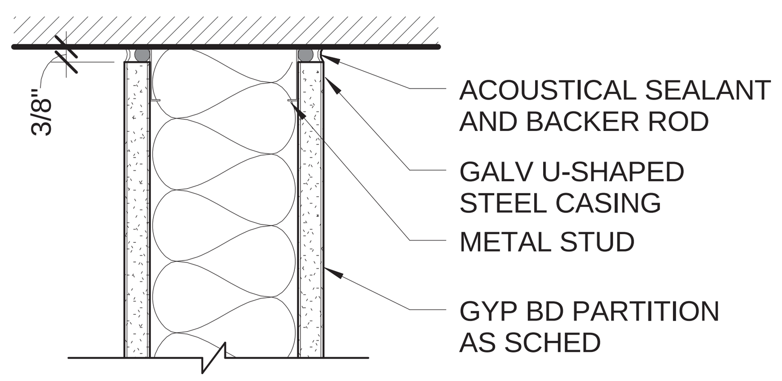

2 A-601 TYP WALL-WALL CONNECTION
3" = 1'-0"

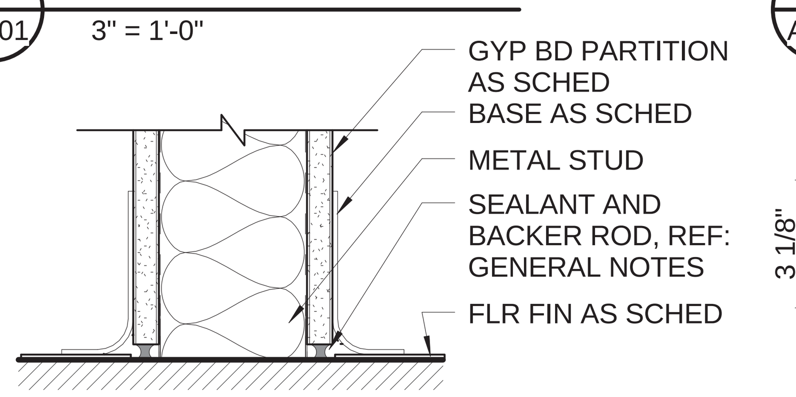

5 A-601 TYP BOTTOM OF WALL CONNECTION
3" = 1'-0"

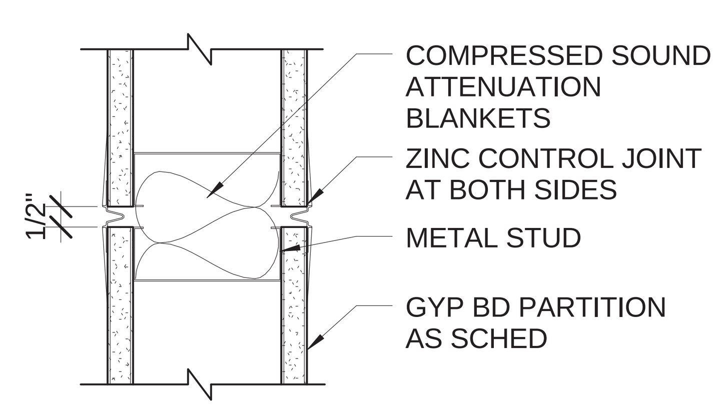

3 A-601 TYP CONTROL JOINT
3" = 1'-0"

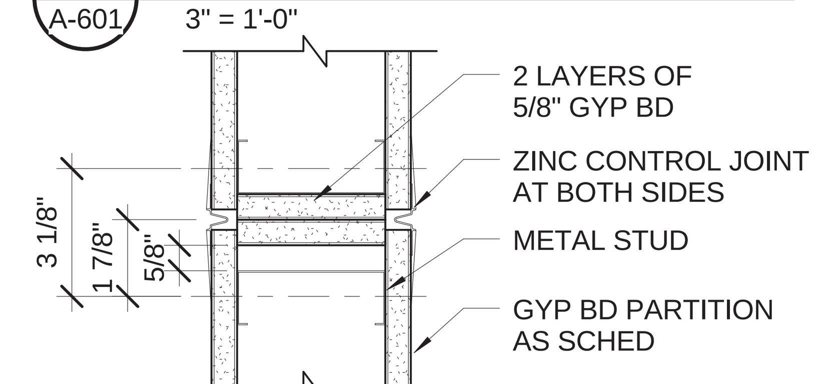

6 A-601 TYP 1 HR RATED CONTROL JOINT
3" = 1'-0"

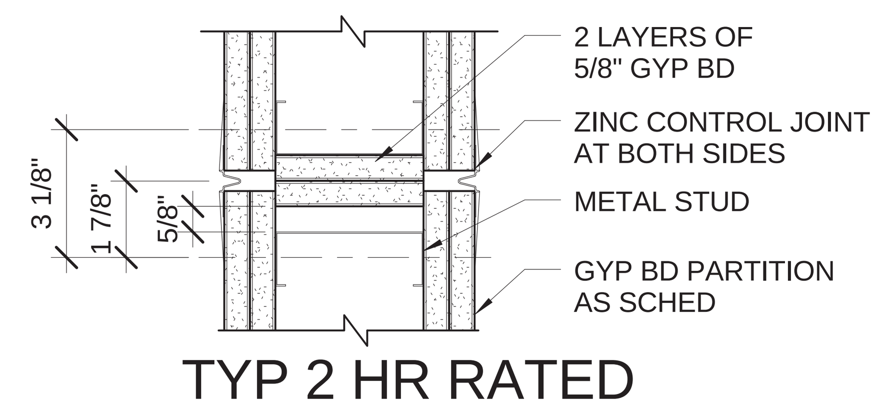

4 A-601 TYP 2 HR RATED CONTROL JOINT
3" = 1'-0"

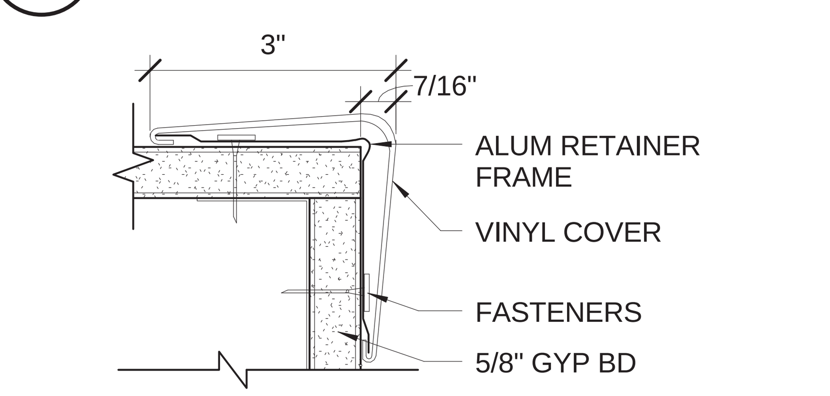

7 A-601 TYP CORNER GUARD
6" = 1'-0"

PARTITION TYPES

FIRST DIGIT IS THE PARTITION 'TYPE' — A3-2 — SECOND DIGIT IS THE 'SIZE INDICATOR'; THIRD DIGIT IS THE PARTITION 'RATING'

GENERAL SHEET NOTES

A.	NOT ALL PARTITIONS ILLUSTRATED ARE USED. REFER TO SCHEDULE BELOW "GYP BD PARTITIONS IN PROJECT" FOR TYPES USED.
B.	"LINE OF STRUCTURE" INDICATED FOR EACH PARTITION IS DIAGRAMMATIC ONLY AND DOES NOT INDICATE EXACT CONSTRUCTION CONDITIONS OR GEOMETRY. REFER TO FOR DETAILS ON THIS SHEET FOR TYPICAL CONNECTION DETAILS.
C.	DO NOT ATTACH METAL STUD TO THE TOP SLIP TRACK.
D.	GYPSUM BOARD: 1. FIRE RESISTANT RATED PARTITIONS SHALL USE TYPE "X" FIRE RATED GYPSUM BOARD. 2. PARTITIONS IN HIGH MOISTURE AREAS SHALL USE MOISTURE RESISTANT GYPSUM BOARD WHICH INCLUDE TOILET ROOM(S), LOCKER ROOM(S),JANITOR CLOSET(S) AND WITHIN 4'-0" OF WATER FOUNTAIN. 3. PARTITIONS BEHIND TOILETS, FIXTURES AND WITHIN SHOWER AREAS SHALL USE CEMENT BOARD WITH A MOISTURE BARRIER. 4. DO NOT ATTACH GYPSUM BOARD TO THE TOP SLIP TRACK. 5. ALL GYPSUM BOARD UTILIZED FOR THIS THE PROJECT SHALL ACHIEVE A SCORE OF 10 AS TESTED IN ACCORDANCE WITH ASTM D3273-00 "STANDARD TEST METHOD OF RESISTANCE TO GROWTH OF MOLD ON THE SURFACE OF INTERIOR COATINGS IN AN ENVIRONMENTAL CHAMBER". 6. ALL GYPSUM BOARD LOCATED IN CORRIDORS AND SHOPS SHALL BE ABUSE RESISTANT.
E.	SEALANT: 1. FIRE RESISTANT RATED PARTITIONS SHALL USE FIRE STOP SEALANT SYSTEM. 2. NON - RATED PARTITIONS AND SMOKE RATED PARTITIONS SHALL USE ACOUSTICAL SEALANT.FIRE RESISTANT RATED PARTITIONS SHALL NOT USE ACOUSTICAL SEALANT.
F.	INSULATION - HEAD CONDITION AT STRUCTURE ABOVE: 1. FIRE RATED RESISTANT PARTITIONS SHALL USE FIRE SAFING INSULATION. 2. NON - RATED PARTITIONS SHALL USE SOUND ATTENUATION BLANKET.
G.	FIRE AND / OR SMOKE RESISTANT RATINGS ARE TO SURROUND ALL OPENINGS IN RATED PARTITIONS.
H.	FIRE AND / OR SMOKE RESISTANT PARTITIONS SHALL EXTEND TO INSIDE FACE OF EXTERIOR SHEATHING,INCLUDING EXTENSIONS THROUGH SOFFITS.
I.	EACH PARTITION INDICATED TO BE FIRE AND/OR SMOKE RESISTANT SHALL BE IDENTIFIED AS SUCH WITH A LABEL ABOVE THE CEILING ON EACH SEGMENT OF WALL AT 8'-0" ON CENTER OR BY THE AUTHORITY HAVING JURISDICTION.
J.	STC RATING IS BASED ON A MIN METAL STUD SIZE OF 3 5/8".
K.	INSTALL HORIZONTAL STUD FRAMING BRACING AT 4'- 0" ON CENTER.
L.	ALL STUDS ARE 16" ON CENTER UNLESS OTHERWISE NOTED.
M.	ALL STUDS ARE MINIMUM 22 GAUGE.
N.	REFER TO FLOOR PLANS FOR LOCATION OF PARTITION TYPE TAGS.

GYP BD PARTITIONS IN PROJECT

MARK	FIRE RATING	COMMENTS
A2		
A3		
A3-1	1 HR	
A3-A		
A3.1A	1 HR	
A6		
A6-A		
B3-2	2 HR	
E3		
E3-A		
F3		
G3		
G3-A		
J4-1	1 HR	
J4-2	1 HR	
N3		
N3-A		
N6		
P3-1A	1 HR	
R3-A		

SYM | DESCRIPTION | DATE | APPR

NAVFAC

REGISTERED ARCHITECT MATTHEW THOMAS 22853 STATE OF TEXAS 05.15.2015
SEAL

JACOBS/ Burns & McDonnell
JACOBS/BURNS & MCDONNELL, A JOINT VENTURE
155 NORTH LAKE AVENUE
PASADENA, CA 91101 USA
TEL 1 (817) 735-6000
FAX 1 (817) 735-6148

JEG NO. FDWD7911 A/E INFO

APPROVED [signature]
FOR COMMANDER NAVFAC 6/11/2015

ACTIVITY

SATISFACTORY TO DATE

DES CPC	DRW MTH	CHK WRP

PM/DM KAO
BRANCH MANAGER [initials]
CHIEF ENG/ARCH [initials]
FIRE PROTECTION [initials]

DEPARTMENT OF THE NAVY
NAVAL FACILITIES ENGINEERING COMMAND
NAVAL FACILITIES ENGINEERING COMMAND ~ PACIFIC
NAVFAC PACIFIC
JOINT BASE PEARL HARBOR - HICKAM
MARINE CORPS BASE HAWAII
KANEOHE, HAWAII
FY14 MCON PROJECT P-863
AIRCRAFT MAINTENANCE HANGAR UPGRADES
PARTITION TYPES

SCALE AS SHOWN
EPROJECT NO. 862914
CONSTR. CONTR. NO.
NAVFAC DRAWING NO. 19043381
SHEET 116 OF 313

A-601

SCALE(S) AS NOTED ON THIS SHEET ARE BASED ON FULL SIZE ANSI D (22' x 34') SHEET. DRAWFORM REVISION: 10 MARCH 2009

FINAL DESIGN - 15 MAY 2015

5/12/2015 7:43:36 AM

USACE DOOR SCHEDULE

DOOR NUMBER	DOOR TYPE	DOOR SIZE WIDTH	DOOR SIZE HEIGHT	DOOR SIZE THICKNESS	DOOR MATERIAL	DOOR FINISH	DOOR UNDER CUT	FIRE RATING	FRAME TYPE	FRAME MATERIAL	FRAME FINISH	FRAME DETAIL HEAD	FRAME DETAIL JAMB	FRAME DETAIL SILL	HARDWARE	COMMENTS
100	F	3' - 0"	7' - 0"	1 3/4"	HM	PT	1"	-	A	HM	PT	3/A-613	3/A-613		3	
101A	F	3' - 0"	7' - 0"	1 3/4"	HM	PT	-	1 HR	B	HM	PT	13/A-612	13/A-612		3	3
101B	F	3' - 0"	7' - 0"	1 3/4"	HM	PT	-	-	A	HM	PT	1/A-612	5/A-612		3	
102	F	3' - 0"	7' - 0"	1 3/4"	HM	PT	-	2 HR	A	HM	PT	1/A-613	6/A-613		4	
103A	F	3' - 0"	7' - 0"	1 3/4"	HM	PT	1"	1 HR	A	HM	PT	1/A-612	5/A-612		10	
104	F	3' - 0"	7' - 0"	1 3/4"	HM	PT	1"	1 HR	A	HM	PT	1/A-612	5/A-612		5	
106	F	3' - 0"	7' - 0"	1 3/4"	HM	PT	-	1 HR	B	HM	PT	4/A-613	4/A-613		8	
107A	G	3' - 0"	7' - 0"	1 3/4"	FRP	PT	-	-	B	HM	PT	5/A-613	5,9/A-613		7	4, 6, 7
107B	F	3' - 0"	7' - 0"	1 3/4"	HM	PT	-	1 HR	B	HM	PT	4/A-613	4/A-613		6	3
108	L	3' - 9 1/2"	8' - 0 3/4"	1 3/4"	FRP	PT	-	-	B	HM	PT	5/A-613	5,9/A-613		9	4, 6
109	F	3' - 0"	7' - 0"	1 3/4"	HM	PT	-	1 HR	B	HM	PT	4/A-613	4/A-613		10	3
109A	F	3' - 0"	7' - 0"	1 3/4"	HM	PT	-	1 HR	A	HM	PT	1/A-612	5/A-612		4	
110A	G	3' - 0"	7' - 0"	1 3/4"	FRP	PT	-	-	B	HM	PT	5/A-613	5,9/A-613		7	4
110B	F	3' - 0"	7' - 0"	1 3/4"	HM	PT	-	1 HR	A	HM	PT	12/A-612	12,13/A-612		30	3
110C	F	3' - 0"	7' - 0"	1 3/4"	HM	PT	-	1 HR	A	HM	PT	1/A-612	5/A-612		13	
111	G	3' - 0"	7' - 0"	1 3/4"	FRP	PT	-	-	B	HM	PT	5/A-613	5,9/A-613		11	4, 6
112A	G	3' - 0"	7' - 0"	1 3/4"	FRP	PT	-	-	B	HM	PT	12/A-612	12,13/A-612		11	4, 6
112B	F	3' - 0"	7' - 0"	1 3/4"	HM	PT	-	-	B	HM	PT	4/A-613	4/A-613		13	
113	F	3' - 6"	6' - 8"	1 3/4"	HM	PT	-	-	B	HM	PT	1/A-613	6/A-613		12	11, 12, 13
114	F	3' - 8"	6' - 8"	1 3/4"	HM	PT	-	1 HR	A	HM	PT	13/A-612	13/A-612		14	8
115A	G	3' - 0"	7' - 0"	1 3/4"	FRP	PT	-	-	B	HM	PT	5/A-613	5,9/A-613		11	4, 6
115B	F	6' - 0"	7' - 0"	1 3/4"	HM	PT	-	1 HR	A	HM	PT	12/A-612	12,13/A-612		17	3
115C	F	6' - 0"	7' - 0"	1 3/4"	HM	PT	-	1 HR	A	HM	PT	12/A-612	12,13/A-612		17	3
116B	F	3' - 0"	7' - 0"	1 3/4"	HM	PT	-	-	A	HM	PT	1/A-612	5/A-612		13	
117A	G	3' - 0"	7' - 0"	1 3/4"	FRP	PT	-	-	B	HM	PT	5/A-613	5,9/A-613		11	4, 6
117B	F	3' - 0"	7' - 0"	1 3/4"	HM	PT	-	1 HR	A	HM	PT	12/A-612	12,13/A-612		8	
118A	G	3' - 0"	7' - 0"	1 3/4"	FRP	PT	-	-	B	HM	PT	5/A-613	5,9/A-613		11	4, 6
118AA	F	3' - 0"	7' - 0"	1 3/4"	HM	PT	-	1 HR	A	HM	PT	1/A-612	5/A-612		4	
118B	F	3' - 0"	7' - 0"	1 3/4"	HM	PT	-	1 HR	B	HM	PT	13/A-612	12,13/A-612		8	
119A	G	3' - 0"	7' - 0"	1 3/4"	FRP	PT	-	-	B	HM	PT	5/A-613	5,9/A-613		7	4, 6, 7
119B	F	3' - 0"	7' - 0"	1 3/4"	HM	PT	-	1 HR	B	HM	PT	4/A-613	4/A-613		6	3
120A	G	3' - 0"	7' - 0"	1 3/4"	FRP	PT	-	-	B	HM	PT	5/A-613	5,9/A-613		11	4, 6
120B	F	10' - 0"	8' - 0"	1 3/4"	HM	PT	-	1 HR	A	HM	PT	12/A-612	12,13/A-612		17	3
121	F	3' - 0"	7' - 0"	1 3/4"	HM	PT	-	-	A	HM	PT	1/A-612	5/A-612		13	
122	F	3' - 0"	7' - 0"	1 3/4"	HM	PT	-	-	A	HM	PT	1/A-612	5/A-612		16	
123	F	2' - 6"	6' - 8"	1 3/4"	HM	PT	-	-	A	HM	PT	-	-	-	2	5
123A	F	3' - 0"	7' - 0"	1 3/4"	HM	PT	-	-	B	HM	PT	-	-	-	2	3
123B	F	2' - 6"	6' - 8"	1 3/4"	HM	PT	-	-	A	HM	PT	-	-	-	2	5
123C	F	2' - 6"	6' - 8"	1 3/4"	HM	PT	-	-	A	HM	PT	-	-	-	2	5
123D	F	3' - 0"	7' - 0"	1 3/4"	HM	PT	-	-	B	HM	PT	-	-		2	3
123E	F	2' - 6"	6' - 8"	1 3/4"	HM	PT	-	-	A	HM	PT	-	-	-	2	5
130A	F	3' - 0"	7' - 0"	1 3/4"	HM	PT	-	1 HR	B	HM	PT	2/A-612	6/A-612		18	
130B	F	3' - 0"	7' - 0"	1 3/4"	HM	PT	-	1 HR	B	HM	PT	2/A-612	6/A-612		19	
130C	F	3' - 0"	7' - 0"	1 3/4"	HM	PT	-	1 HR	B	HM	PT	2/A-612	6/A-612		6	
130D	F	3' - 0"	7' - 0"	1 3/4"	HM	PT	-	-	A	HM	PT	11/A-612	11/A-612	12/A-613	7	4, 6
131	F	6' - 0"	7' - 0"	1 3/4"	HM	PT	-	-	A	HM	PT	1/A-612	5/A-612		20	
132A	F	3' - 0"	7' - 0"	1 3/4"	HM	PT	-	1 HR	A	HM	PT	1/A-612	5/A-612		6	
132B	F	3' - 0"	7' - 0"	1 3/4"	HM	PT	-	1 HR	B	HM	PT	2/A-612	6/A-612		6	
133	F	3' - 0"	7' - 0"	1 3/4"	HM	PT	-	2 HR	A	HM	PT	1/A-613	6/A-613		4	
135	F	6' - 0"	7' - 0"	1 3/4"	HM	PT	-	1 HR	A	HM	PT	1/A-612	5/A-612		21	
136A	F	6' - 0"	7' - 0"	1 3/4"	HM	PT	-	1 HR	B	HM	PT	2/A-612	6/A-612		22	
136B	F	6' - 0"	7' - 0"	1 3/4"	HM	PT	-	1 HR	B	HM	PT	2/A-612	6/A-612		22	
136C	F	3' - 0"	7' - 0"	1 3/4"	HM	PT	1"	-	A	HM	PT	1/A-612	5/A-612		18	
136D	F	3' - 0"	7' - 0"	1 3/4"	HM	PT	-	1 HR	B	HM	PT	2/A-612	6/A-612		18	
137A	F	3' - 0"	7' - 0"	1 3/4"	HM	PT	-	-	A	HM	PT	1/A-612	5/A-612		14	
137B	F	3' - 0"	7' - 0"	1 3/4"	HM	PT	-	1 HR	B	HM	PT	2/A-613	7/A-613		14	
137C	OHC	8' - 0"	4' - 0"	1/2"	HM	PT	-	1 HR	-	HM	PT	4/A-612	8/A-612	11/A-613	23	
137D	OHC	8' - 0"	10' - 0"	1/2"	HM	PT	-	1 HR	-	HM	PT	4/A-612	8/A-612	9/A-612	23	
138	F	3' - 0"	7' - 0"	1 3/4"	HM	PT	1"	-	A	HM	PT	1/A-612	5/A-612		24	
139	F	3' - 0"	7' - 0"	1 3/4"	HM	PT	1"	-	A	HM	PT	1/A-612	5/A-612		5	
140	F	3' - 0"	7' - 0"	1 3/4"	HM	PT	-	-	A	HM	PT	1/A-612	5/A-612		10	
141	F	3' - 0"	7' - 0"	1 3/4"	HM	PT	-	-	A	HM	PT	1/A-612	5/A-612		4	
142A	F	3' - 0"	7' - 0"	1 3/4"	HM	PT	-	1 HR	B	HM	PT	2/A-612	6/A-612		18	
143	F	3' - 0"	7' - 0"	1 3/4"	HM	PT	-	-	A	HM	PT	1/A-612	5/A-612		14	
144	F	3' - 0"	7' - 0"	1 3/4"	HM	PT	-	-	A	HM	PT	1/A-612	5/A-612		13	
145	F	3' - 0"	7' - 0"	1 3/4"	HM	PT	-	-	A	HM	PT	1/A-612	5/A-612		13	
146	F	3' - 0"	7' - 0"	1 3/4"	HM	PT	-	-	A	HM	PT	1/A-612	5/A-612		13	
148	F	3' - 0"	7' - 0"	1 3/4"	HM	PT	-	-	A	HM	PT	1/A-612	5/A-612		14	
149A	F	6' - 0"	7' - 0"	1 3/4"	HM	PT	-	1 HR	B	HM	PT	2/A-612	6/A-612		17	
149B	F	3' - 0"	7' - 0"	1 3/4"	HM	PT	-	1 HR	A	HM	PT	1/A-612	5/A-612		14	
150A	F	3' - 0"	7' - 0"	1 3/4"	HM	PT	-	1 HR	A	HM	PT	1/A-612	5/A-612		6	
150B	F	3' - 0"	7' - 0"	1 3/4"	HM	PT	-	1 HR	B	HM	PT	2/A-612	6/A-612		6	
151A	F	3' - 0"	7' - 0"	1 3/4"	HM	PT	-	1 HR	B	HM	PT	2/A-612	6/A-612		6	
151B	F	3' - 0"	7' - 0"	1 3/4"	HM	PT	-	1 HR	B	HM	PT	2/A-612	6/A-612		18	
151C	F	3' - 0"	7' - 0"	1 3/4"	HM	PT	-	1 HR	-	HM	PT	2/A-612	6/A-612		6	
151D	F	3' - 0"	7' - 0"	1 3/4"	HM	PT	-	-	A	HM	PT	11/A-612	11/A-612	12/A-613	7	
152A	F	2' - 6"	6' - 8"	1 3/4"	HM	PT	-	-	A	HM	PT	-	-	-	2	5
152B	F	3' - 0"	7' - 0"	1 3/4"	HM	PT	-	-	B	HM	PT	-	-	-	2	3
152C	F	3' - 0"	7' - 0"	1 3/4"	HM	PT	-	-	B	HM	PT	-	-	-	2	5
152D	F	2' - 6"	6' - 8"	1 3/4"	HM	PT	-	-	A	HM	PT	-	-	-	2	5
160A	F	3' - 0"	7' - 0"	1 3/4"	HM	PT	-	1 HR	A	HM	PT	13/A-612	13/A-612		3	3
160B	F	3' - 0"	7' - 0"	1 3/4"	HM	PT	-	-	A	HM	PT	1/A-612	5/A-612		3	
161	F	3' - 0"	7' - 0"	1 3/4"	HM	PT	1"	-	A	HM	PT	3/A-613	3/A-613		3	
162	F	3' - 0"	7' - 0"	1 3/4"	HM	PT	1"	-	A	HM	PT	1/A-612	5/A-612		5	
164	F	3' - 0"	7' - 0"	1 3/4"	HM	PT	-	2 HR	A	HM	PT	1/A-613	6/A-613		4	
165A	F	3' - 0"	7' - 0"	1 3/4"	HM	PT	-	1 HR	A	HM	PT	1/A-612	5/A-612		10	
165AA	F	3' - 0"	7' - 0"	1 3/4"	HM	PT	1"	1 HR	A	HM	PT	1/A-612	5/A-612		4	
167A	G	3' - 0"	7' - 0"	1 3/4"	FRP	PT	-	-	B	HM	PT	5/A-613	5,9/A-613		7	4, 6, 7
167B	F	3' - 0"	7' - 0"	1 3/4"	HM	PT	-	1 HR	B	HM	PT	-	-	-	6	3
167C	F	3' - 0"	7' - 0"	1 3/4"	HM	PT	-	1 HR	-	HM	PT	4/A-613	4/A-613		8	
167D	F	3' - 0"	7' - 0"	1 3/4"	HM	PT	-	1 HR	B	HM	PT	4/A-613	4/A-613		4	
168A	L	3' - 9 1/2"	8' - 0 3/4"	1 3/4"	FRP	PT	-	-	A	HM	PT	5/A-613	5,9/A-613		9	4, 6
169A	G	3' - 0"	7' - 0"	1 3/4"	FRP	PT	-	-	B	HM	PT	5/A-613	5,9/A-613		11	4, 6
169B	F	6' - 0"	7' - 0"	1 3/4"	HM	PT	-	1 HR	A	HM	PT	12/A-612	12,13/A-612		17	
170A	G	3' - 0"	7' - 0"	1 3/4"	FRP	PT	-	-	B	HM	PT	12/A-612	12,13/A-612		11	4, 6
170B	F	6' - 0"	7' - 0"	1 3/4"	HM	PT	-	1 HR	B	HM	PT	12/A-612	12,13/A-612		17	3
171A	F	3' - 8"	6' - 8"	1 3/4"	HM	PT	-	1 HR	A	HM	PT	-	-		14	8
171B	F	3' - 0"	7' - 0"	1 3/4"	HM	PT	-	-	A	HM	PT	4/A-613	4/A-613		14	
171C	F	3' - 0"	7' - 0"	1 3/4"	HM	PT	-	-	B	HM	PT	4/A-613	4/A-613		14	
172A	G	3' - 0"	7' - 0"	1 3/4"	FRP	PT	-	-	B	HM	PT	5/A-613	5,9/A-613		11	4, 6
172B	F	6' - 0"	7' - 0"	1 3/4"	HM	PT	-	1 HR	A	HM	PT	12/A-612	12,13/A-612		14	3
173A	G	3' - 0"	7' - 0"	1 3/4"	FRP	PT	-	-	B	HM	PT	5/A-613	5,9/A-613		11	4, 6
173B	F	6' - 0"	7' - 0"	1 3/4"	HM	PT	-	1 HR	A	HM	PT	12/A-612	12,13/A-612		14	3
174A	G	3' - 0"	7' - 0"	1 3/4"	FRP	PT	-	-	B	HM	PT	5/A-613	5,9/A-613		11	4, 6
174B	F	6' - 0"	7' - 0"	1 3/4"	HM	PT	-	1 HR	A	HM	PT	-	-		17	3
174C	F	3' - 0"	7' - 0"	1 3/4"	HM	PT	-	1 HR	A	HM	PT	1/A-612	5/A-612		4	
175A	G	3' - 0"	7' - 0"	1 3/4"	FRP	PT	-	-	B	HM	PT	5/A-613	5,9/A-613		7	4, 6, 7
175B	F	3' - 0"	7' - 0"	1 3/4"	HM	PT	-	1 HR	B	HM	PT	-	-		6	3
176A	G	3' - 0"	7' - 0"	1 3/4"	FRP	PT	-	-	B	HM	PT	5/A-613	5,9/A-613		11	4, 6
176B	F	10' - 0"	8' - 0"	1 3/4"	HM	PT	-	1 HR	B	HM	PT	-	-		17	3
190A	F	5' - 0"	6' - 8"	1 3/4"	STL	PT	-	-	B	HM	PT	-	-		1	3

USACE DOOR SCHEDULE

DOOR NUMBER	DOOR TYPE	DOOR SIZE WIDTH	DOOR SIZE HEIGHT	DOOR SIZE THICKNESS	DOOR MATERIAL	DOOR FINISH	DOOR UNDER CUT	FIRE RATING	FRAME TYPE	FRAME MATERIAL	FRAME FINISH	FRAME DETAIL HEAD	FRAME DETAIL JAMB	FRAME DETAIL SILL	HARDWARE	COMMENTS
190B	F	5' - 0"	6' - 8"	1 3/4"	STL	PT	-	-	B	HM	PT	-	-		1	3
191	F	2' - 10"	7' - 0"	1 3/4"	HM	PT	-	-	B	HM	PT	-	-		15	3
192A	F	3' - 0"	7' - 0"	1 3/4"	HM	PT	-	-	B	HM	PT	-	-		15	3
192B	F	3' - 0"	7' - 0"	1 3/4"	HM	PT	-	-	B	HM	PT	-	-		15	3
193A	F	5' - 0"	6' - 8"	1 3/4"	STL	PT	-	-	B	HM	PT	-	-		1	3
193B	F	5' - 0"	6' - 8"	1 3/4"	STL	PT	-	-	B	HM	PT	-	-		1	3
194	F	2' - 10"	7' - 0"	1 3/4"	HM	PT	-	-	B	HM	PT	-	-		15	3
195A	F	3' - 0"	7' - 0"	1 3/4"	HM	PT	-	-	B	HM	PT	-	-		15	3
195B	F	3' - 0"	7' - 0"	1 3/4"	HM	PT	-	-	B	HM	PT	-	-		15	3
200	F	3' - 0"	7' - 0"	1 3/4"	HM	PT	-	-	A	HM	PT	-	-		13	3
200A	F	3' - 0"	7' - 0"	1 3/4"	HM	PT	-	-	A	HM	PT	10/A-613	10/A-613		4	
201A	OHC	14' - 0"	9' - 0"	2"	HM	PT	-	-		HM	PT	2.B/A-311	3/A-642	2.A/A-311	23	1
201B	OHC	14' - 0"	9' - 0"	2"	HM	PT	-	-		HM	PT	2.B/A-311	3/A-642	2.A/A-311	23	1
202	F	3' - 0"	7' - 0"	1 3/4"	HM	PT	-	-	A	HM	PT	3/A-612	3, 7/A-612		4	
204	F	3' - 0"	7' - 0"	1 3/4"	HM	PT	-	1 HR	A	HM	PT	3/A-612	3, 7/A-612		10	
204.1	F	3' - 0"	7' - 0"	1 3/4"	HM	PT	-	1 HR	A	HM	PT	1/A-613	6/A-613		12	11, 12, 13
205	F	3' - 0"	7' - 0"	1 3/4"	HM	PT	-	1 HR		HM	PT	-	-		6	3
206	F	3' - 0"	7' - 0"	1 3/4"	HM	PT	1"	-	A	HM	PT	-	-		3	3
206B	F	2' - 6"	7' - 0"	1 3/4"	HM	PT	1"	-	A	HM	PT	-	-		16	3
207	F	3' - 0"	7' - 0"	1 3/4"	HM	PT	-	-	A	HM	PT	1/A-612	5/A-612		29	10, 12, 13
208	F	3' - 0"	7' - 0"	1 3/4"	HM	PT	1"	-	A	HM	PT	1/A-612	5/A-612		25	
209	F	3' - 0"	7' - 0"	1 3/4"	HM	PT	1"	-	A	HM	PT	3/A-612	3, 7/A-612		13	
210	F	3' - 0"	7' - 0"	1 3/4"	HM	PT	-	-	A	HM	PT	1/A-612	5/A-612		29	10, 12, 13
211	F	3' - 0"	7' - 0"	1 3/4"	HM	PT	-	-	A	HM	PT	-	-		29	3, 12
212	F	3' - 0"	7' - 0"	1 3/4"	HM	PT	-	-	A	HM	PT	-	-		13	3
213A	F	3' - 0"	7' - 0"	1 3/4"	HM	PT	-	1 HR	A	HM	PT	3/A-612	3, 7/A-612		29	10, 12, 13
213B	F	3' - 0"	7' - 0"	1 3/4"	HM	PT	-	1 HR	A	HM	PT	-	-		29	9, 10, 12, 13
214	F	3' - 0"	7' - 0"	1 3/4"	HM	PT	-	-	A	HM	PT	1/A-613	6/A-613		14	11, 12, 13
215	F	3' - 0"	7' - 0"	1 3/4"	HM	PT	-	-	A	HM	PT	7/A-612 SIM	3, 7/A-612 SIM		12	11, 12, 13
216	F	3' - 0"	7' - 0"	1 3/4"	HM	PT	-	-	A	HM	PT	3/A-612	3, 7/A-612		3	
217	F	3' - 0"	7' - 0"	1 3/4"	HM	PT	-	1 HR	B	HM	PT	-	-		6	3
218	F	3' - 0"	7' - 0"	1 3/4"	HM	PT	-	-	A	HM	PT	-	-		29	3, 12, 13
220	F	3' - 0"	7' - 0"	1 3/4"	HM	PT	-	-	A	HM	PT	1/A-612	5/A-612		29	3, 10, 12, 13
221	F	3' - 0"	7' - 0"	1 3/4"	HM	PT	-	-	A	HM	PT	6/A-612	1/A-612		29	10, 12, 13
230	F	3' - 0"	7' - 0"	1 3/4"	HM	PT	-	-	A	HM	PT	1/A-612	5/A-612		29	10, 12, 13
231	F	3' - 0"	7' - 0"	1 3/4"	HM	PT	-	1 HR	A	HM	PT	1/A-612	5/A-612		6	
233	F	6' - 0"	7' - 0"	1 3/4"	HM	PT	-	1 HR	A	HM	PT	1/A-612	5/A-612		21	
235A	F	3' - 0"	7' - 0"	1 3/4"	HM	PT	-	-	A	HM	PT	1/A-612	5/A-612		29	10, 12, 13
235B	F	3' - 0"	7' - 0"	1 3/4"	HM	PT	-	-	A	HM	PT	1/A-612	5/A-612		29	10, 12, 13
236	F	6' - 0"	7' - 0"	1 3/4"	HM	PT	-	-	A	HM	PT	1/A-612	5/A-612		20	
237	F	3' - 0"	7' - 0"	1 3/4"	HM	PT	-	-	A	HM	PT	1/A-612	5/A-612		4	
238	F	3' - 0"	7' - 0"	1 3/4"	HM	PT	-	-	A	HM	PT	1/A-612	5/A-612		13	
239	F	3' - 0"	7' - 0"	1 3/4"	HM	PT	-	-	A	HM	PT	1/A-612	5/A-612		16	
240	F	3' - 0"	7' - 0"	1 3/4"	HM	PT	-	-	A	HM	PT	1/A-612	5/A-612		16	
241	F	3' - 0"	7' - 0"	1 3/4"	HM	PT	1"	-	A	HM	PT	1/A-612	5/A-612		3	
242	F	3' - 0"	7' - 0"	1 3/4"	HM	PT	-	-	A	HM	PT	1/A-612	5/A-612		13	
243	F	3' - 0"	7' - 0"	1 3/4"	HM	PT	1"	-	A	HM	PT	1/A-612	5/A-612		3	
244	F	3' - 0"	7' - 0"	1 3/4"	HM	PT	1"	-	A	HM	PT	1/A-612	5/A-612		16	
245	F	3' - 0"	7' - 0"	1 3/4"	HM	PT	1"	-		HM	PT	1/A-612	5/A-612		3	
246	F	3' - 0"	7' - 0"	1 3/4"	HM	PT	-	-	A	HM	PT	1/A-612	5/A-612		13	
247	F	3' - 0"	7' - 0"	1 3/4"	HM	PT	-	-	A	HM	PT	1/A-612	5/A-612		29	10, 12, 13
248	F	3' - 0"	7' - 0"	1 3/4"	HM	PT	-	-	A	HM	PT	1/A-612	5/A-612		13	
249	F	3' - 0"	7' - 0"	1 3/4"	HM	PT	-	-	A	HM	PT	1/A-612	5/A-612		26	
250	F	3' - 0"	7' - 0"	1 3/4"	HM	PT	-	-	A	HM	PT	1/A-612	5/A-612		26	
251A	F	3' - 0"	7' - 0"	1 3/4"	HM	PT	-	-	A	HM	PT	1/A-612	5/A-612		29	10, 12, 13
251B	F	3' - 0"	7' - 0"	1 3/4"	HM	PT	-	-	A	HM	PT	1/A-612	5/A-612		29	10, 12, 13
252A	F	3' - 0"	7' - 0"	1 3/4"	HM	PT	-	-	A	HM	PT	1/A-612	5/A-612		29	10, 12, 13
252B	F	3' - 0"	7' - 0"	1 3/4"	HM	PT	-	-	A	HM	PT	1/A-612	5/A-612		29	10, 12, 13
252C	F	3' - 0"	7' - 0"	1 3/4"	HM	PT	-	-	A	HM	PT	1/A-612	5/A-612		29	10, 12, 13
253	F	3' - 0"	7' - 0"	1 3/4"	HM	PT	-	-	A	HM	PT	1/A-612	5/A-612		29	10, 12, 13
254	F	3' - 0"	7' - 0"	1 3/4"	HM	PT	-	-	A	HM	PT	1/A-612	5/A-612		10	
255	F	3' - 0"	7' - 0"	1 3/4"	HM	PT	-	-	A	HM	PT	1/A-613	6/A-613		12	11, 12, 13
256	F	3' - 0"	7' - 0"	1 3/4"	HM	PT	-	-		HM	PT	1/A-612	5/A-612		26	
257	F	3' - 0"	7' - 0"	1 3/4"	HM	PT	-	1 HR	A	HM	PT	1/A-612	5/A-612		6	
260	F	3' - 0"	7' - 0"	1 3/4"	HM	PT	-	-	A	HM	PT	-	-		26	3
261A	OHC	14' - 0"	9' - 0"	2"	HM	PT	-	-		HM	PT	2.B/A-311	3/A-642	2.A/A-311	23	1
261B	OHC	14' - 0"	9' - 0"	2"	HM	PT	-	-		HM	PT	2.B/A-311	3/A-642	2.A/A-311	23	1
262	F	3' - 0"	7' - 0"	1 3/4"	HM	PT	-	-	A	HM	PT	3/A-612	3, 7/A-612		4	
262A	F	3' - 0"	7' - 0"	1 3/4"	HM	PT	-	-	A	HM	PT	3/A-612	7/A-612		4	
263	F	3' - 0"	7' - 0"	1 3/4"	HM	PT	-	1 HR	A	HM	PT	3/A-612	3, 7/A-612		10	
265	F	3' - 0"	7' - 0"	1 3/4"	HM	PT	-	1 HR	B	HM	PT	-	-		6	3
266	F	3' - 0"	7' - 0"	1 3/4"	HM	PT	1"	-	B	HM	PT	-	-		3	3
267	F	2' - 6"	7' - 0"	1 3/4"	HM	PT	1"	-	B	HM	PT	-	-		8	3
268	F	3' - 0"	7' - 0"	1 3/4"	HM	PT	-	-	A	HM	PT	3/A-612	3, 7/A-612		3	
269	F	3' - 0"	7' - 0"	1 3/4"	HM	PT	-	-	A	HM	PT	3/A-612	3, 7/A-612		26	
270	F	3' - 0"	7' - 0"	1 3/4"	HM	PT	-	-	A	HM	PT	-	-		26	3
271	F	3' - 0"	7' - 0"	1 3/4"	HM	PT	-	-	A	HM	PT	-	-		26	3
272	F	3' - 0"	7' - 0"	1 3/4"	HM	PT	-	-	A	HM	PT	-	-		26	3
273A	F	3' - 0"	7' - 0"	1 3/4"	HM	PT	-	-	A	HM	PT	-	-		26	3
273B	F	3' - 0"	7' - 0"	1 3/4"	HM	PT	-	-	A	HM	PT	-	-		26	3
274A	F	3' - 0"	7' - 0"	1 3/4"	HM	PT	-	-	A	HM	PT	-	-		26	3
274B	F	6' - 0"	7' - 0"	1 3/4"	HM	PT	-	-	A	HM	PT	-	-		27	3
275	F	3' - 0"	7' - 0"	1 3/4"	HM	PT	1"	-	A	HM	PT	3/A-612	3, 7/A-612		3	
276	F	3' - 0"	7' - 0"	1 3/4"	HM	PT	-	1 HR	B	HM	PT	-	-		6	3
277	F	3' - 0"	7' - 0"	1 3/4"	HM	PT	-	-	A	HM	PT	-	-		26	3
278	F	3' - 0"	7' - 0"	1 3/4"	HM	PT	-	-	B	HM	PT	-	-		26	3

GENERAL NOTES - DOOR SCHEDULE

A	REFER TO A-105 AND A-106 FOR PARTITION LAYOUT AND DIMENSIONS. REFER TO A-601 FOR PARTITION TYPES AND DETAILS.
B	REFER TO I-601 FOR SIGNAGE TYPES AND DETAILS.
C	REFER TO A-131 AND A-432 FOR HANGAR DOOR DETAILS. REFER TO A-612 AND A-613 FOR DOOR DETAILS.
D	MANUFACTURER PRODUCTS INDICATED ESTABLISHES A MINIMUM LEVEL OF ACCEPTABLE QUALITY. IT IS NOT INTENDED TO LIMIT THE SELECTION OF APPROVED EQUIVALENT PRODUCTS.
E	REFER TO DOOR HARDWARE SPECIFICATION 08 71 00 FOR DOOR HARDWARE SETS.
F	CONTRACTOR TO VERIFY WALL CONSTRUCTION AT ALL EXISTING WALLS.

DOOR SCHEDULE REMARKS

1	EXISTING FUSIBLE LINK AT EXISTING FIRE RATED OVERHEAD COILING DOOR, PROTECT DURING CONSTRUCTION.
2	REFER TO INTERIORS FOR FLOORING MATERIAL TRANSITIONS
3	EXISTING DOOR AND FRAME TO BE CLEANED AND PREPARED FOR REFINISHING AS SCHEDULED, PROVIDE NEW HARDWARE
4	EXTERIOR DOOR TO MATCH HISTORIC DOORS
5	EXISTING EXTERIOR DOORS TO BE REFINISHED
6	FIELD VERIFY EXISTING DIMENSIONS.
7	HEAD AND JAMB DETAIL SIMILAR. INTERIOR FACE OF HISTORIC WINDOW TO REMAIN EXPOSED AND PROTECTED DURING CONSTRUCTION.
8	EXISTING VAULT DOOR TO REMAIN. CLEAN AND PREPARE DOOR FOR PAINT
9	EXISTING DOOR TO REMAIN AS-IS; PROTECT DURING CONSTRUCTION.
10	PROVIDE A MINIMUM OF 16-GAUGE FOR HOLLOW METAL CONSTRUCTION FOR DOOR AND MINIMUM OF 16-GAUGE FOR HOLLOW METAL DOOR FRAME.
11	PROVIDE A MINIMUM OF 16-GAUGE FOR HOLLOW METAL CONSTRUCTION FOR DOOR FRAME AND MINIMUM OF 12-GAUGE HOLLOW METAL CONSTRUCTION FOR DOOR WITH REINFORCED VERTICAL STIFFENERS AT 6" OC.
12	PROIVIDE ACOUSTIC SEALANT AT BOTH SIDES OF FRAME WHERE IT MEETS WALL, AND FILL VOIDS BETWEEN FRAME AND WALL WITH SOUND DEADENING MATERIAL.
13	DOORS TO HAVE AN STC RATING OF 45

DOOR SCHEDULE ABBREVIATIONS

1" BRG	1" BLAST RESISTANT, LOW E, TINTED, LAMINATED, CLEAR GLASS
1/4" CG	1/4" CLEAR GLASS
5/16" FRIG	5/16" FIRE RATED IMPACT GLAZING
AL	ALUMINUM
FIN	FINISH
FRP	FIBERGLASS REINFORCED PLASTIC
GALV	GALVANIZED
GLZG	GLAZING
HDWR	HARDWARE
HM	HOLLOW METAL
MATL	MATERIAL
MIN	MINUTE
NO	DOOR NUMBER
P	PAINTED
PA	PREFINISHED ANODIZED ALUMINUM
ST	STAINED
STC	SOUND TRANSMISSION CLASS RATING
STL	STEEL
THK	THICKNESS
UL	UNDERWRITER'S LABORATORY
WD	FSC CERTIFIED WOOD

FRAME TYPES

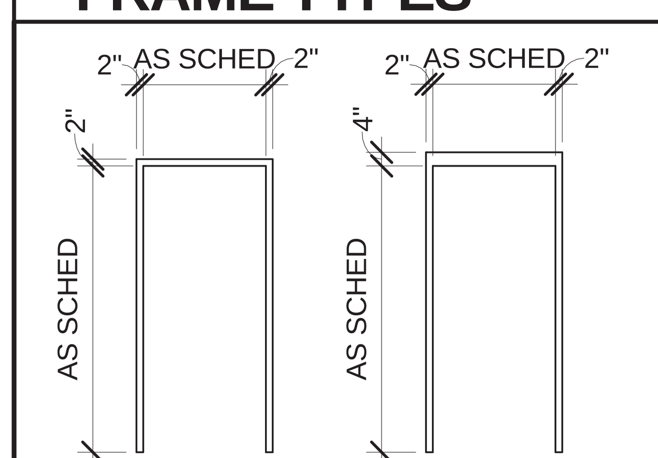

STD HM FRAME
A

STD MASONRY HM FRAME
B

DOOR TYPES

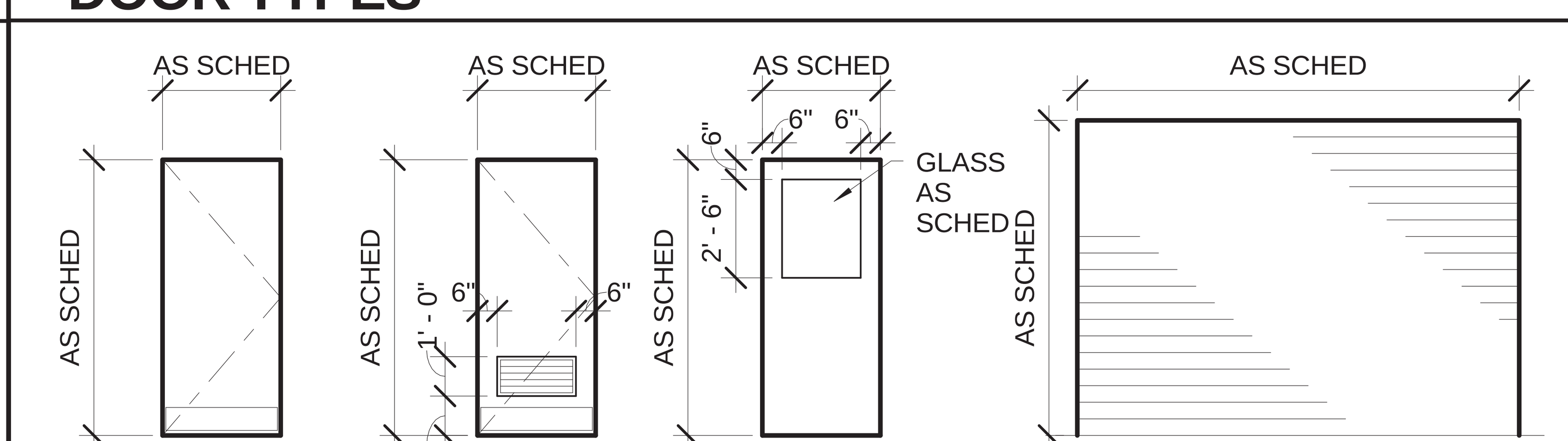

FLUSH
F

LOUVER (BOTTOM)
L

HALF GLASS
G

OVERHEAD COILING STEEL DOOR
OHC

APPR | DATE | DESCRIPTION | SYM

NAVFAC

REGISTERED ARCHITECT
STATE OF TEXAS
22853
05.15.2015
SEAL

JACOBS / Burns & McDonnell
JACOBS/BURNS & MCDONNELL, A JOINT VENTURE
155 NORTH LAKE AVENUE
PASADENA, CA 91101 USA
TEL 1 (817) 735-6000
FAX 1 (817) 735-6148

JEG NO. FDWD7911 A/E INFO

APPROVED
FOR COMMANDER NAVFAC 6/11/2015

ACTIVITY

SATISFACTORY TO DATE

DES CPC | DRW MTH | CHK WRP

PM/DM

BRANCH MANAGER

CHIEF ENG/ARCH

FIRE PROTECTION

DEPARTMENT OF THE NAVY
NAVAL FACILITIES ENGINEERING COMMAND
NAVAL FACILITIES ENGINEERING COMMAND ~ PACIFIC
NAVFAC PACIFIC
JOINT BASE PEARL HARBOR - HICKAM
MARINE CORPS BASE HAWAII
KANEOHE, HAWAII
FY14 MCON PROJECT P-863
AIRCRAFT MAINTENANCE HANGAR UPGRADES
DOOR & FRAME SCHEDULE

SCALE AS SHOWN
EPROJECT NO. 862914
CONSTR. CONTR. NO.
NAVFAC DRAWING NO. 19043382
SHEET 117 OF 313

A-611

FINAL DESIGN - 15 MAY 2015

SCALE(S) AS NOTED ON THIS SHEET ARE BASED ON FULL SIZE ANSI D (22' x 34') SHEET. DRAWFORM REVISION: 10 MARCH 2009

5/12/2015 7:43:44 AM

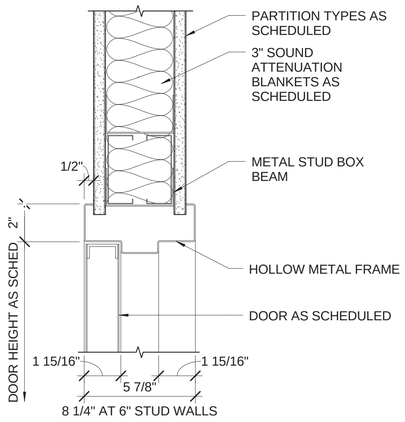

HEAD DETAIL - GYP BD WALL

3" = 1'-0" A-612 (1)

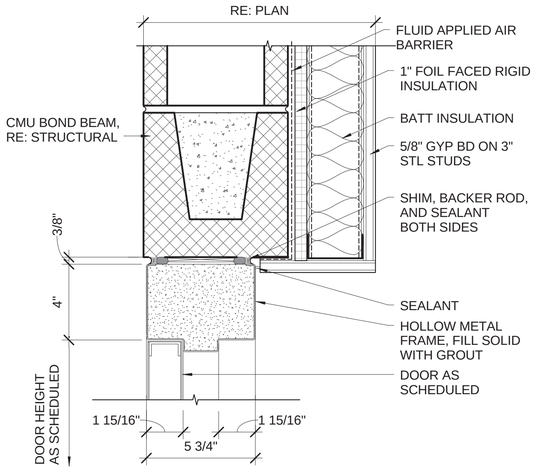

HEAD DETAIL - CMU WALL WITH GYP BD FURRING

3" = 1'-0" A-612 (2)

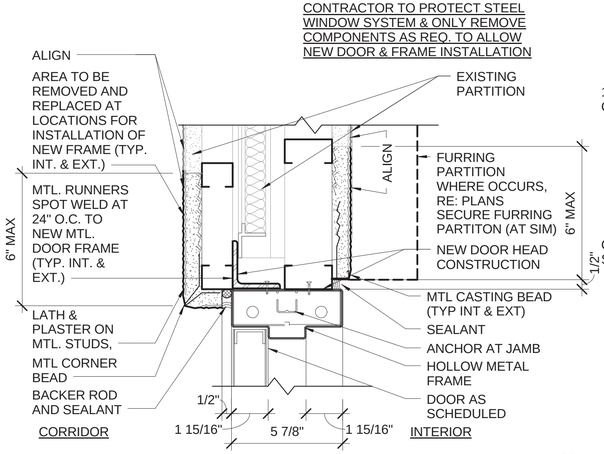

HEAD/JAMB DETAIL - EXISTING WALL

3" = 1'-0" A-612 (3)

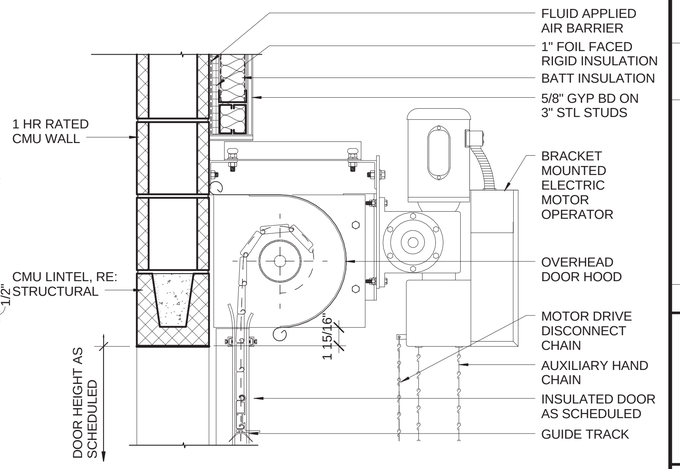

HEAD DETAIL - OH DOOR

1 1/2" = 1'-0" A-612 (4)

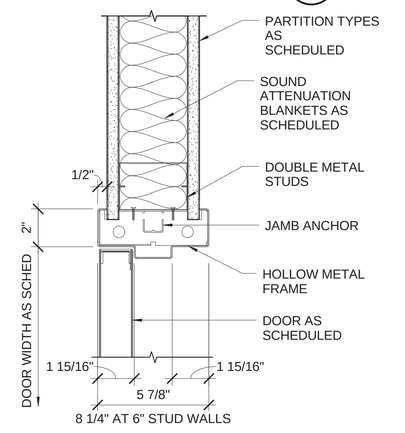

JAMB DETAIL - GYP BD WALL

3" = 1'-0" A-612 (5)

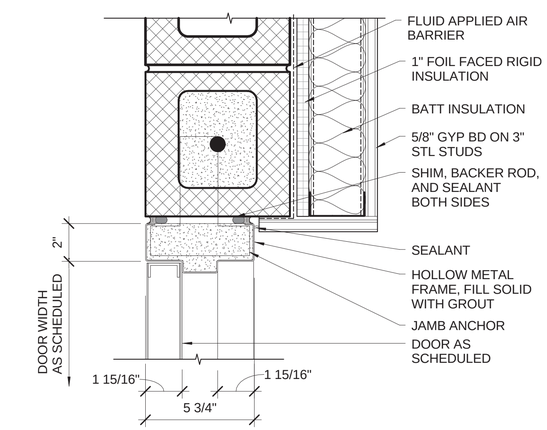

JAMB DETAIL - CMU WALL WITH GYP BD FURRING

3" = 1'-0" A-612 (6)

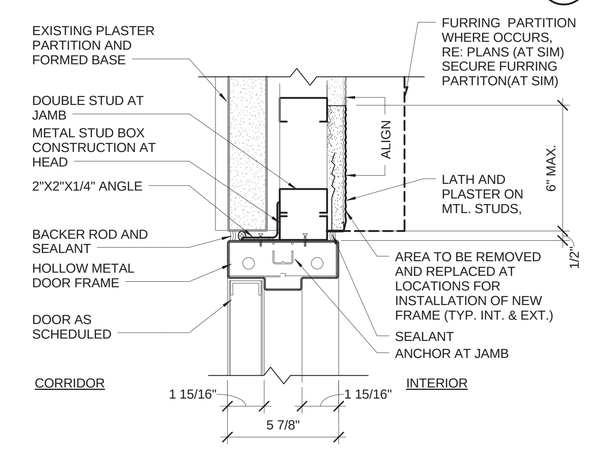

NEW DOOR JAMB/HEAD DETAIL - EXISTING WALL

3" = 1'-0" A-612 (7)

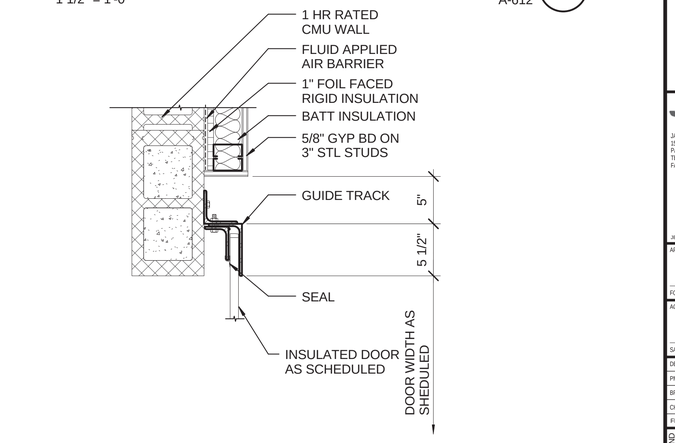

OVERHEAD COILING DOOR JAMB

1 1/2" = 1'-0" A-612 (8)

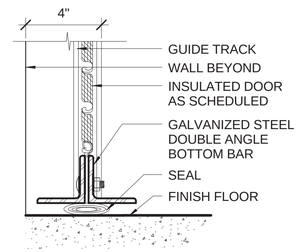

OVERHEAD COILING DOOR SILL

3" = 1'-0" (9)

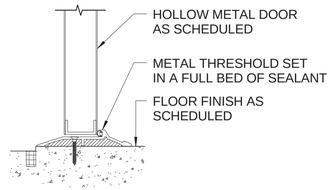

HMD SILL AT EXT WALL

3" = 1'-0" (10)

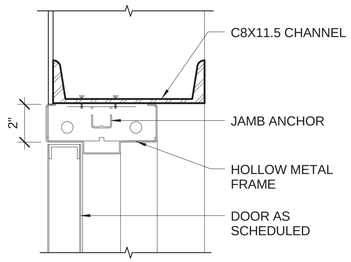

JAMB/HEAD AT HANGAR DOOR

3" = 1'-0" (11)

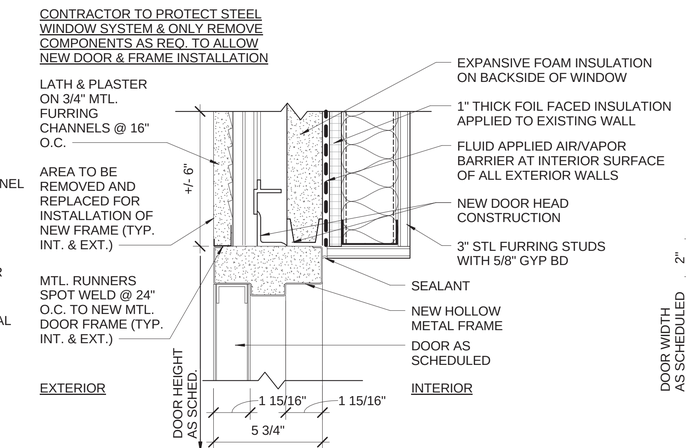

HEAD/JAMB AT BAY/STREET SIDE HANGAR WALL

3" = 1'-0" (12)

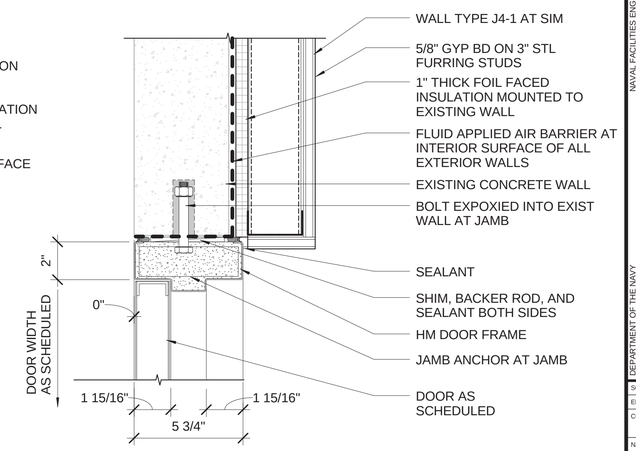

HEAD/JAMB DETAIL - INTERIOR HANGAR CONC WALL

3" = 1'-0" (13)

APPR	
DATE	
DESCRIPTION	
SYM	

NAVFAC

REGISTERED ARCHITECT — MATTHEW THORNBERRY — 5.15.2015 — 22853 — STATE OF TEXAS

JACOBS/ Burns & McDonnell

JACOBS/BURNS & MCDONNELL, A JOINT VENTURE
155 NORTH LAKE AVENSE
PASADENA, CA 91101 USA
TEL 1 (817) 735-6000
FAX 1 (817) 735-6148

JEG NO. FDWD7911 A/E INFO

APPROVED
FOR COMMANDER NAVFAC 6/11/2015

ACTIVITY

SATISFACTORY TO DATE

DES	CPC	DRW	MTH	CHK	WRP
PMDM					
BRANCH MANAGER					
CHIEF ENGARCH					
FIRE PROTECTION					

NAVAL FACILITIES ENGINEERING COMMAND
NAVAL FACILITIES ENGINEERING COMMAND – PACIFIC
JOINT BASE PEARL HARBOR - HICKAM
DEPARTMENT OF THE NAVY
NAVFAC PACIFIC
KANEOHE, HAWAII
MARINE CORPS BASE HAWAII
FY14 MCON PROJECT P-863
AIRCRAFT MAINTENANCE HANGAR UPGRADES
DOOR DETAILS

SCALE	AS SHOWN
EPROJECT NO.	862914
CONSTR. CONTR. NO.	
NAVFAC DRAWING NO.	19043383
SHEET	118 OF 313

A-612

5/12/2015 7:43:48 AM

SCALE(S) AS NOTED ON THIS SHEET ARE BASED ON FULL SIZE ANSI D (22" x 34") SHEET. DRAWFORM REVISION: 10 MARCH 2009

FINAL DESIGN - 15 MAY 2015

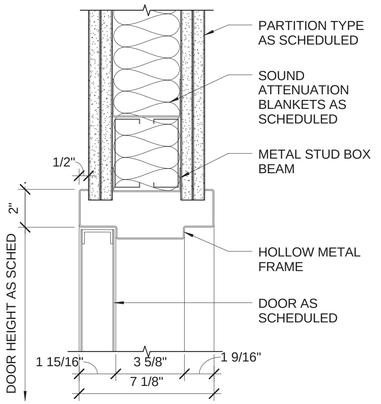

DR HEAD AT GYP BD WALL 1
3" = 1'-0" A-613

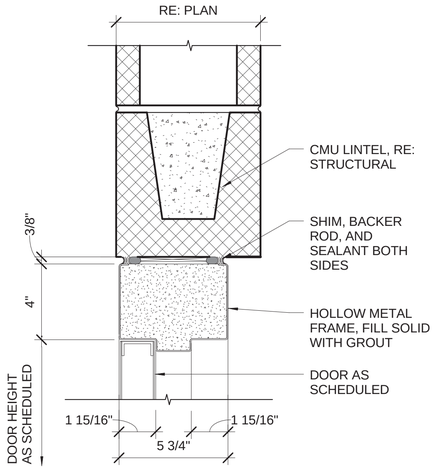

HEAD DETAIL - CMU WALL 2
3" = 1'-0" A-613

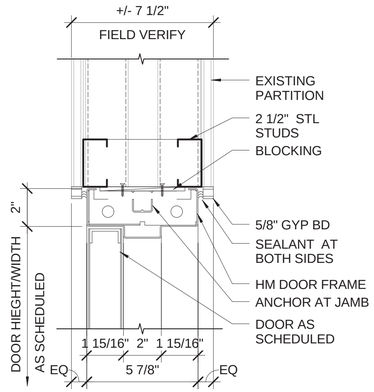

HEAD/JAMB DETAIL - EXISTING CHASE WALL 3
3" = 1'-0" A-613

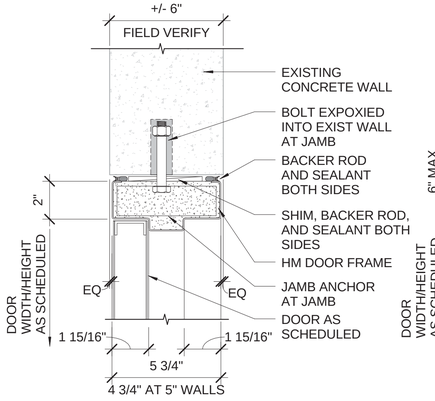

HEAD/JAMB DETAIL - EXISTING CONC WALL 4
3" = 1'-0" A-613

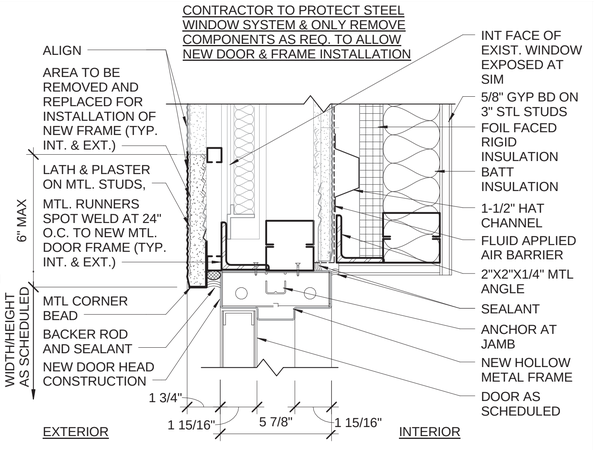

HEAD/JAMB DETAIL - EXISTING EXTERIOR WALL 5
3" = 1'-0" A-613

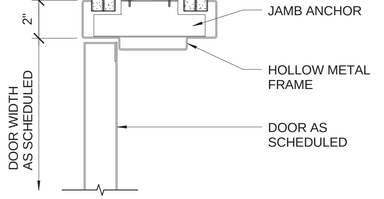

DR JAMB AT GYP BD WALL 6
3" = 1'-0" A-613

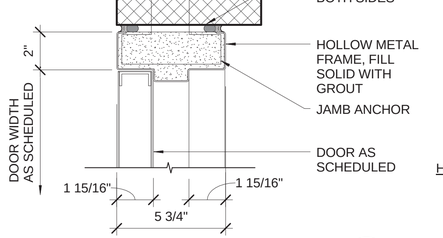

JAMB DETAIL - CMU WALL 7
3" = 1'-0" A-613

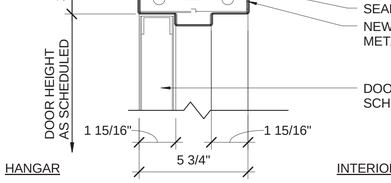

HEAD DETAIL - HISTORIC HANGAR WALL 8
3" = 1'-0" A-613

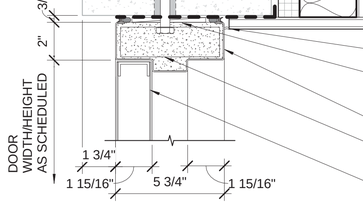

HEAD/JAMB DETAIL - EXISTING 10" CONC WALL 9
3" = 1'-0" A-613

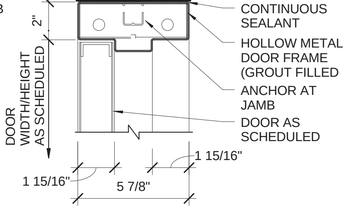

HEAD/JAMB DETAIL - EXISTING PLASTER WALL 10
3" = 1'-0" A-613

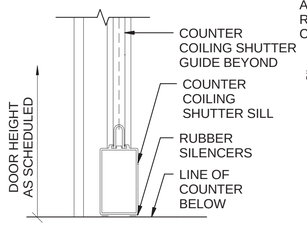

SILL DETAIL 11
3" = 1'-0" A-613

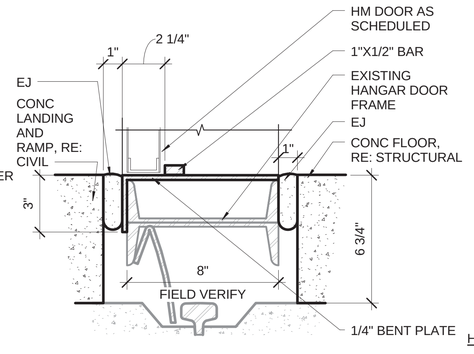

SILL DETAIL - HANGAR ACCESS DOOR 12
3" = 1'-0"

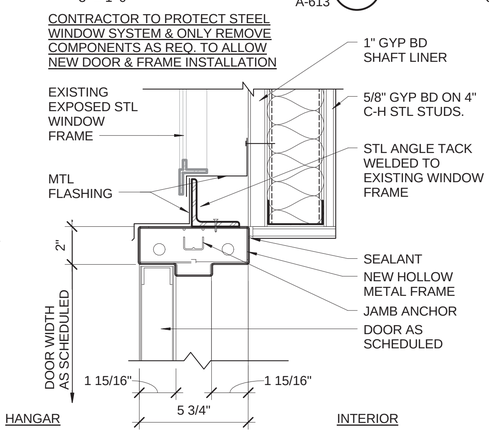

JAMB DETAIL - HISTORIC HANGAR WALL 13
3" = 1'-0" A-613

5/12/2015 7:43:51 AM

SCALE(S) AS NOTED ON THIS SHEET ARE BASED ON FULL SIZE ANSI D (22" x 34") SHEET. DRAWFORM REVISION: 10 MARCH 2009

FINAL DESIGN - 15 MAY 2015

APPR	DATE	DESCRIPTION	CKM

NAVFAC

REGISTERED ARCHITECT — EDWARD THOMAS — 22853 — STATE OF TEXAS — 05-15-2015

JACOBS/Parsons Brinckerhoff

JACOBS/BURNS & MCDONNELL, A JOINT VENTURE
155 NORTH LAKE AVENUE
PASADENA, CA 91101 USA
TEL 1 (817) 735-6000
FAX 1 (817) 735-6148

JEG NO. FDWD7911 A/E INFO

APPROVED
FOR COMMANDER NAVFAC 6/11/2015

ACTIVITY

SATISFACTORY TO DATE

DES	CPC	DRW	MTH	CHK	WRP

PMDM
BRANCH MANAGER
CHIEF ENGARCH
FIRE PROTECTION

DEPARTMENT OF THE NAVY
NAVFAC PACIFIC
NAVAL FACILITIES ENGINEERING COMMAND ~ PACIFIC
JOINT BASE PEARL HARBOR - HICKAM
MARINE CORPS BASE HAWAII
KANEOHE, HAWAII
FY14 MCON PROJECT P-863
AIRCRAFT MAINTENANCE HANGAR UPGRADES
DOOR DETAILS

SCALE	AS SHOWN
EPROJECT NO.	862914
CONSTR. CONTR. NO.	
NAVFAC DRAWING NO.	19043384
SHEET	119 OF 313

A-613

WINDOW TYPES

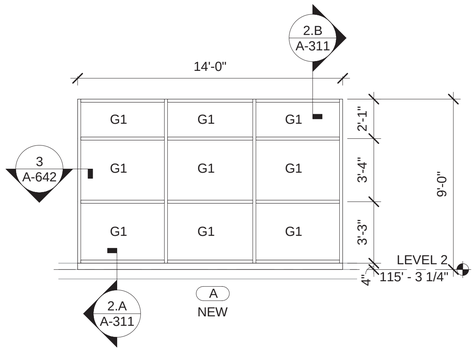

A
NEW

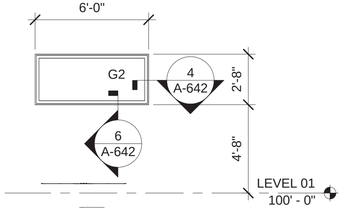

B
NEW

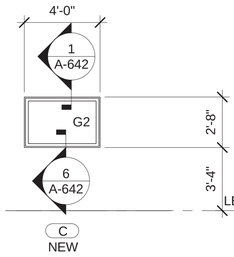

C
NEW

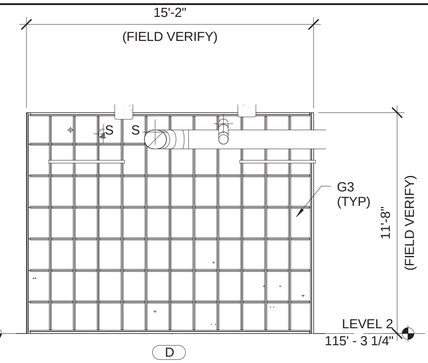

D

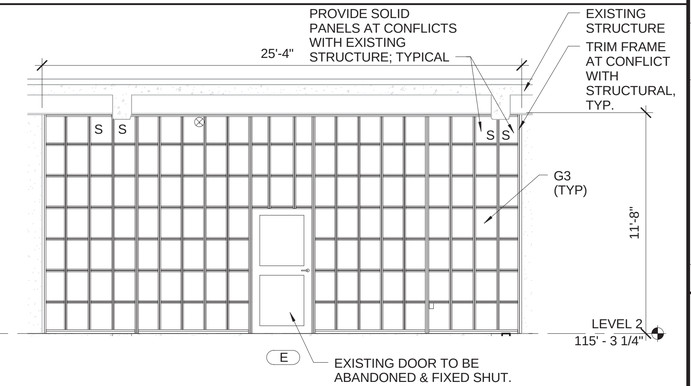

E

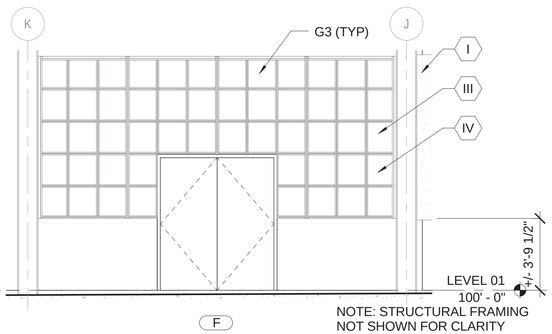

F
NOTE: STRUCTURAL FRAMING
NOT SHOWN FOR CLARITY

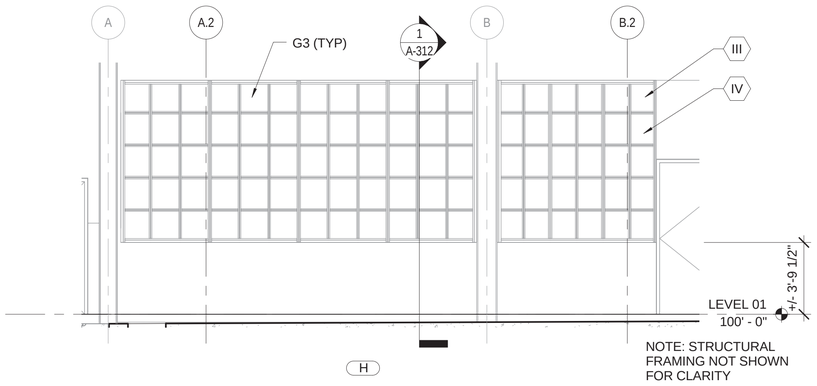

H
NOTE: STRUCTURAL FRAMING NOT SHOWN
FOR CLARITY

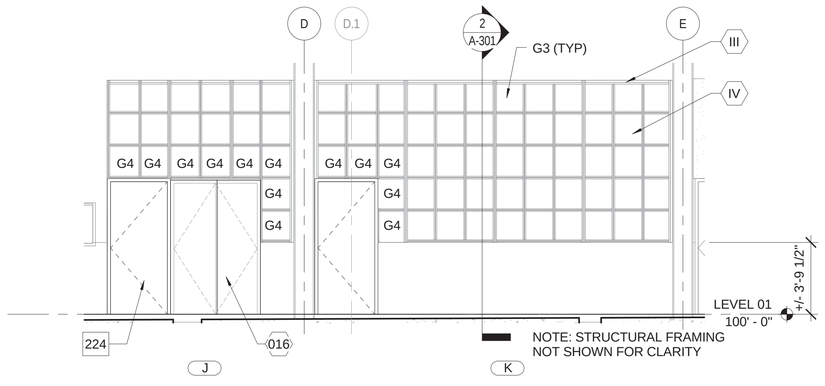

J
NOTE: STRUCTURAL FRAMING
NOT SHOWN FOR CLARITY
K

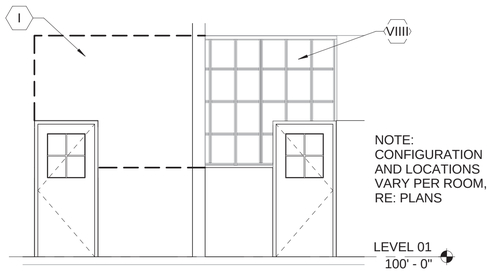

L
NOTE:
CONFIGURATION
AND LOCATIONS
VARY PER ROOM,
RE: PLANS

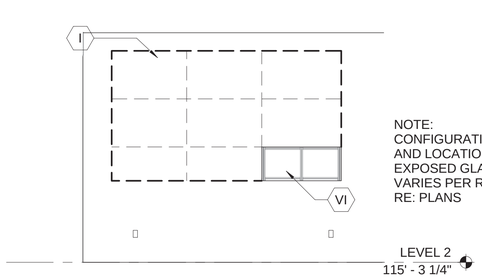

M
NOTE:
CONFIGURATION
AND LOCATION OF
EXPOSED GLAZING
VARIES PER ROOM.
RE: PLANS

GENERAL NOTES - WINDOW AND LOUVERS

1	REUSE EXISTING GLAZING WHERE POSSIBLE.
2	WINDOW TYPE "A" IS BASED UPON A KAWNEER IR500 SERIES STOREFRONT SYSTEM
3	WINDOW TYPE "B" IS BASED UPON A HOLLOW METAL FIRE RATED WINDOW SYSTEM
4	WINDOW TYPES "D" THRU "M" ARE HISTORIC STEEL SASH AND PUTTY GLAZED WINDOW PARTITIONS AND ALL COMPONENTS ARE TO BE HANDLED WITH CARE. REFER TO PLANS, DETAILS, AND ELEVATIONS FOR MORE INFORMATION
5	WINDOW TYPES "F" THRU "K" ARE HISTORIC STEEL SASH WINDOW SYSTEMS EMBEDDED IN PLASTER WALLS, AND THE EXTENTS OF THE INTACT GLAZING IS UNKNOWN. THE WINDOWS ARE SHOWN BASED ON AS-BUILT DOCUMENTS, AND WILL NEED TO BE VERIFIED.

GLAZING SCHEDULE

G1	1" INSULATED GLASS
G2	1" FIRE RATED INSULATED GLASS
G3	1/4" CLEAR FLOAT (FROSTED FILM)
G4	1/4" TEMPERED GLASS
S	SOLID PANELS

KEYNOTES - HISTORIC WINDOWS

I	LOCATION OF HISTORIC STEEL SASH WINDOW SYSTEM EMBEDDED IN EXISTING WALL TO REMAIN, PROTECT DURING CONSTRUCTION
III	CAREFULLY REMOVE AND SALVAGE STEEL SASH WINDOW SYSTEM, REFURBISH STEEL FRAME AND PREPARE FOR REINSTALLATION IN ORIGINAL LOCATION.
IV	REMOVE AND SALVAGE INTACT GLAZING. INSTALL GLAZING AS SCHEDULED
VI	EXISTING WINDOWS TO REMAIN, AND AT EXTERIOR CONDITIONS WINDOWS TO BE FIXED IN PLACE AND CAULKED. PROTECT DURING CONSTRUCTION.
VIIII	EXISTING STEEL SASH WINDOW SYSTEM PARTIALLY EXPOSED IN WALL. EXPOSED STEEL SASH AND GLASS TO BE CLEANED AND PAINTED, PROTECT DURING CONSTRUCTION.

KEYNOTES

016	EXISTING DOOR TO BE NON-OPERABLE AND REMAIN IN CLOSED POSITION
224	INSULATED HOLLOW METAL DOOR, PAINTED

APPR | DATE | DESCRIPTION | SYM

NAVFAC

REGISTERED ARCHITECT
MATTHEW THOMAS
05.15.2015
22853
STATE OF TEXAS

JACOBS/ BURNS & MCDONNELL

JACOBS/BURNS & MCDONNELL, A JOINT VENTURE
155 NORTH LAKE AVENSE
PASADENA, CA 91101 USA
TEL 1 (817) 735-6000
FAX 1 (817) 735-6148

JEG NO. FDWD7911 | A/E INFO

APPROVED
FOR COMMANDER NAVFAC 6/11/2015

ACTIVITY

SATISFACTORY TO DATE

DES	CPC	DRW	MTH	CHK	WRP

PMDM KAO
BRANCH MANAGER
CHIEF ENGARCH
FIRE PROTECTION

DEPARTMENT OF THE NAVY
NAVFAC PACIFIC
MARINE CORPS BASE HAWAII
NAVAL FACILITIES ENGINEERING COMMAND – PACIFIC
JOINT BASE PEARL HARBOR - HICKAM
KANEOHE, HAWAII
FY14 MCON PROJECT P-863
AIRCRAFT MAINTENANCE HANGAR UPGRADES
WINDOW TYPES AND DETAILS

SCALE AS SHOWN
EPROJECT NO. 862914
CONSTR. CONTR. NO.
NAVFAC DRAWING NO. 19043385
SHEET 120 OF 313

A-641

FINAL DESIGN - 15 MAY 2015

5/12/2015 7:44:07 AM

SCALE(S) AS NOTED ON THIS SHEET ARE BASED ON FULL SIZE ANSI D (22" x 34") SHEET. DRAWFORM REVISION: 10 MARCH 2009

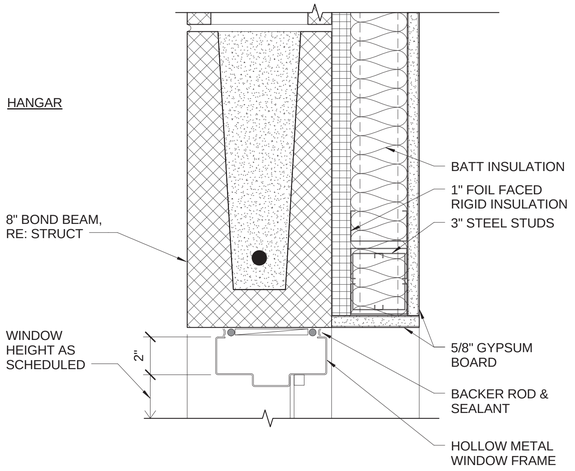

HEAD DETAIL 1
3" = 1'-0"
A-642
A-641

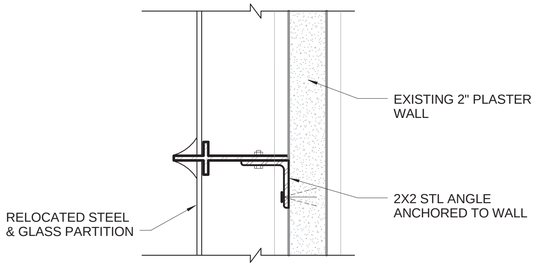

HEAD DETAIL 2
3" = 1'-0"
A-642
A-641

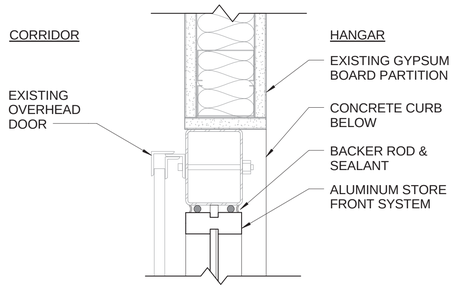

JAMB DETAIL 3
3" = 1'-0"
A-642
A-641

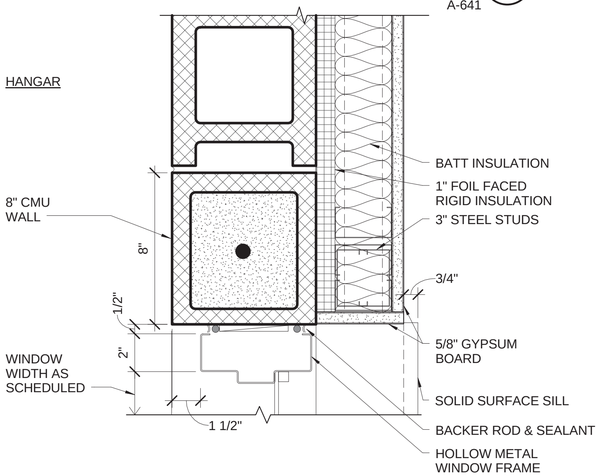

JAMB DETAIL 4
3" = 1'-0"
A-642
A-641

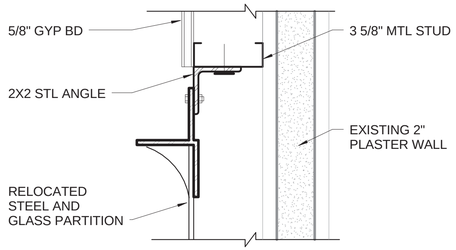

JAMB DETAIL 5
3" = 1'-0"
A-642
A-641

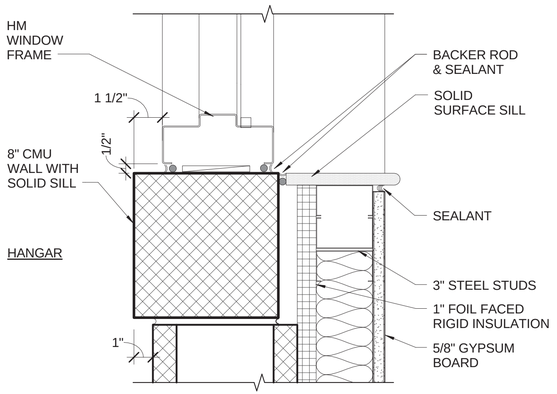

SILL DETAIL 6
3" = 1'-0"
A-642
A-641

0 8
SCALE: 3" = 1'-0"

SYM	DESCRIPTION	DATE	APPR

NAVFAC

REGISTERED ARCHITECT
THEW THOMAS
25.15.2015
22853
STATE OF TEXAS

JACOBS/BURNS & MCDONNELL, A JOINT VENTURE
155 NORTH LAKE AVENUE
PASADENA, CA 91101 USA
TEL 1 (817) 735-6000
FAX 1 (817) 735-6148

JEG NO. FDW07911 A/E INFO

APPROVED
FOR COMMANDER NAVFAC 6/11/2015

ACTIVITY

SATISFACTORY TO DATE

DES	CPC	DRW	MTH	CHK	WRP

PM/DM KAD
BRANCH MANAGER pm
CHIEF ENG/ARCH
FIRE PROTECTION

DEPARTMENT OF THE NAVY
NAVAL FACILITIES ENGINEERING COMMAND
NAVAL FACILITIES ENGINEERING COMMAND ~ PACIFIC
NAVFAC PACIFIC
JOINT BASE PEARL HARBOR - HICKAM
MARINE CORPS BASE HAWAII
KANEOHE, HAWAII

FY14 MCON PROJECT P-863
AIRCRAFT MAINTENANCE HANGAR UPGRADES

WINDOW DETAILS

SCALE AS SHOWN
EPROJECT NO. 862914
CONSTR. CONTR. NO.
NAVFAC DRAWING NO. 19043386
SHEET 121 OF 313

A-642

FINAL DESIGN - 15 MAY 2015

SCALE(S) AS NOTED ON THIS SHEET ARE BASED ON FULL SIZE ANSI D (22 x 34) SHEET. DRAWFORM REVISION: 10 MARCH 2009

5/12/2015 7:44:09 AM