MODEL AND IMPLEMENTATION, MANAGEMENT DEVELOPMENT OF AN INDIGENOUS GAME SYSTEMS KALH-PELLAH A VITAL STEPS IN SYSTEM ANALYSIS USING *UNIFIED MODELING LANGUAGE*; - CLASS DIAGRAM, SEQUENCE DIAGRAM, ACTIVITY DIAGRAM AND USE CASE DIAGRAM TO DESCRIBE THE FUNCTIONALITY OF THE GAME

BY

CHARLES BUKAR

I.D No.: - CS/09/1794

SUBMITTED TO COURSE LECTURER

MR. SOLOMON OYELERE

CSC 311 SYSTEM ANALYSIS AND DESIGN (3 UNIT)

DEPARTMENT OF COMPUTER SCIENCE

MODIBBO ADAMA UNIVERSITY OF TECHNOLOGY, YOLA

04th November, 2015

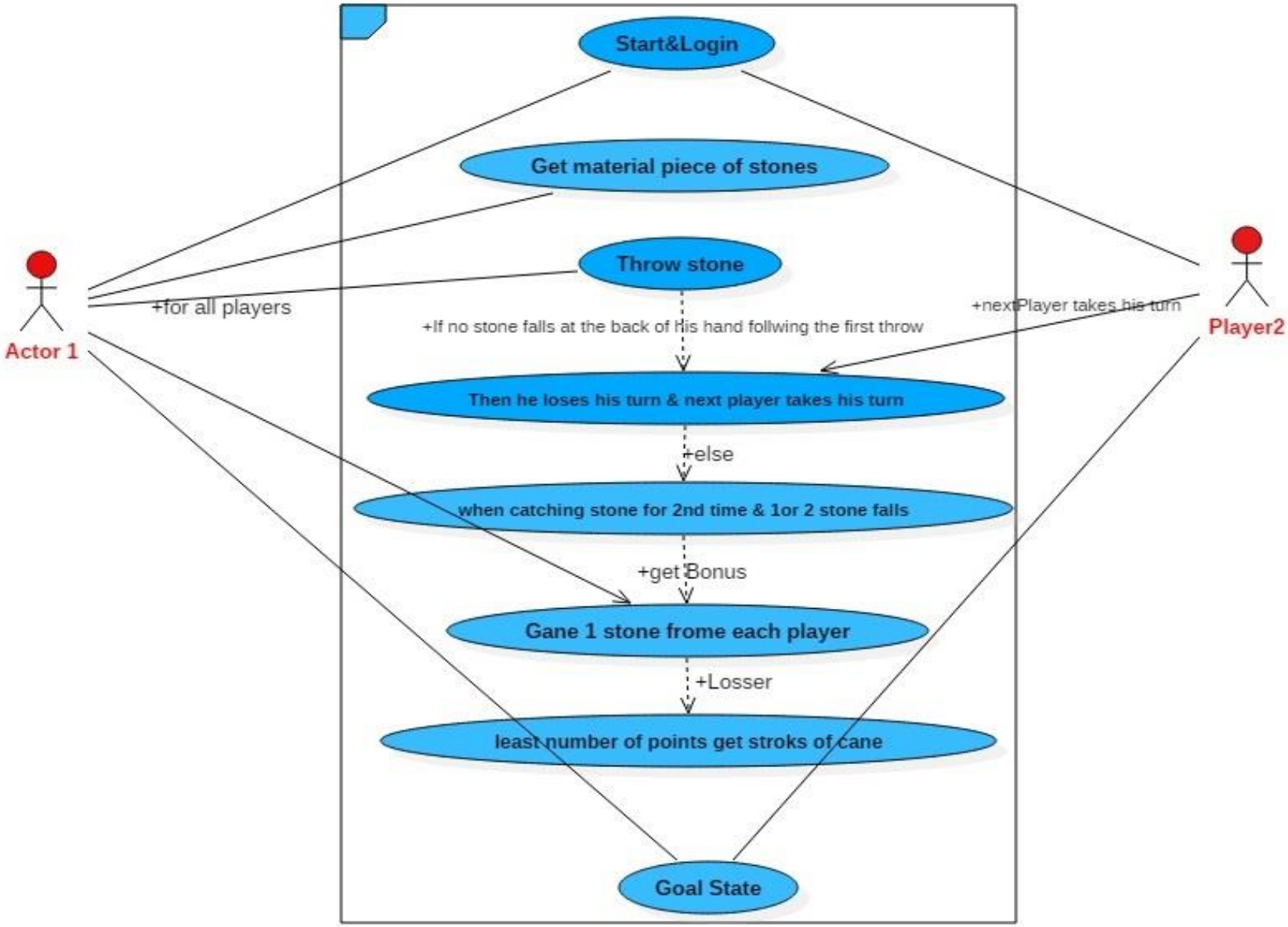

Fig. 1.1 Use Case Diagram of indigenous game model *Kalh-Pellah*

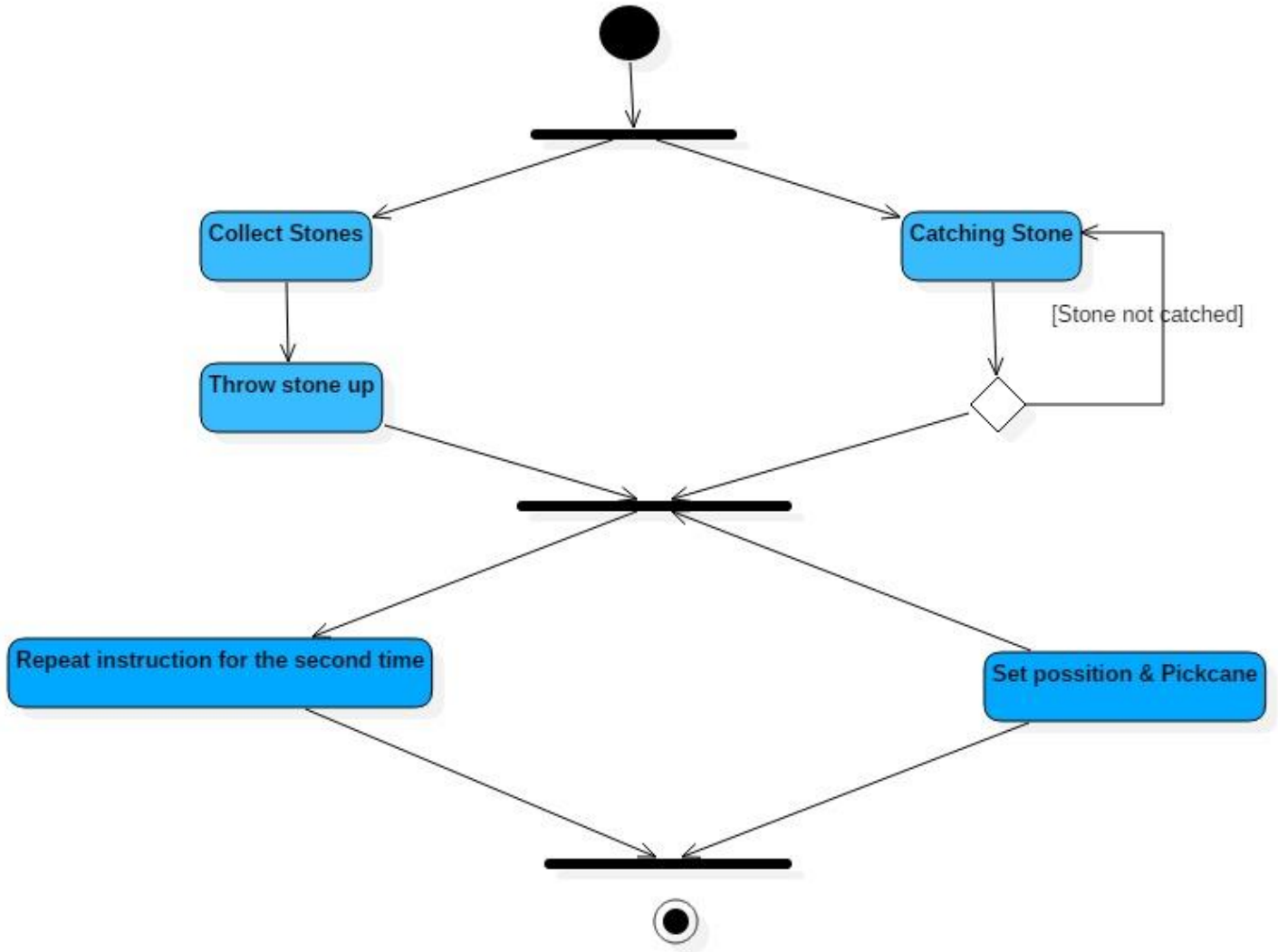

Fig. 1.2 Activity Diagram of indigenous game model *Kalh-Pellah*

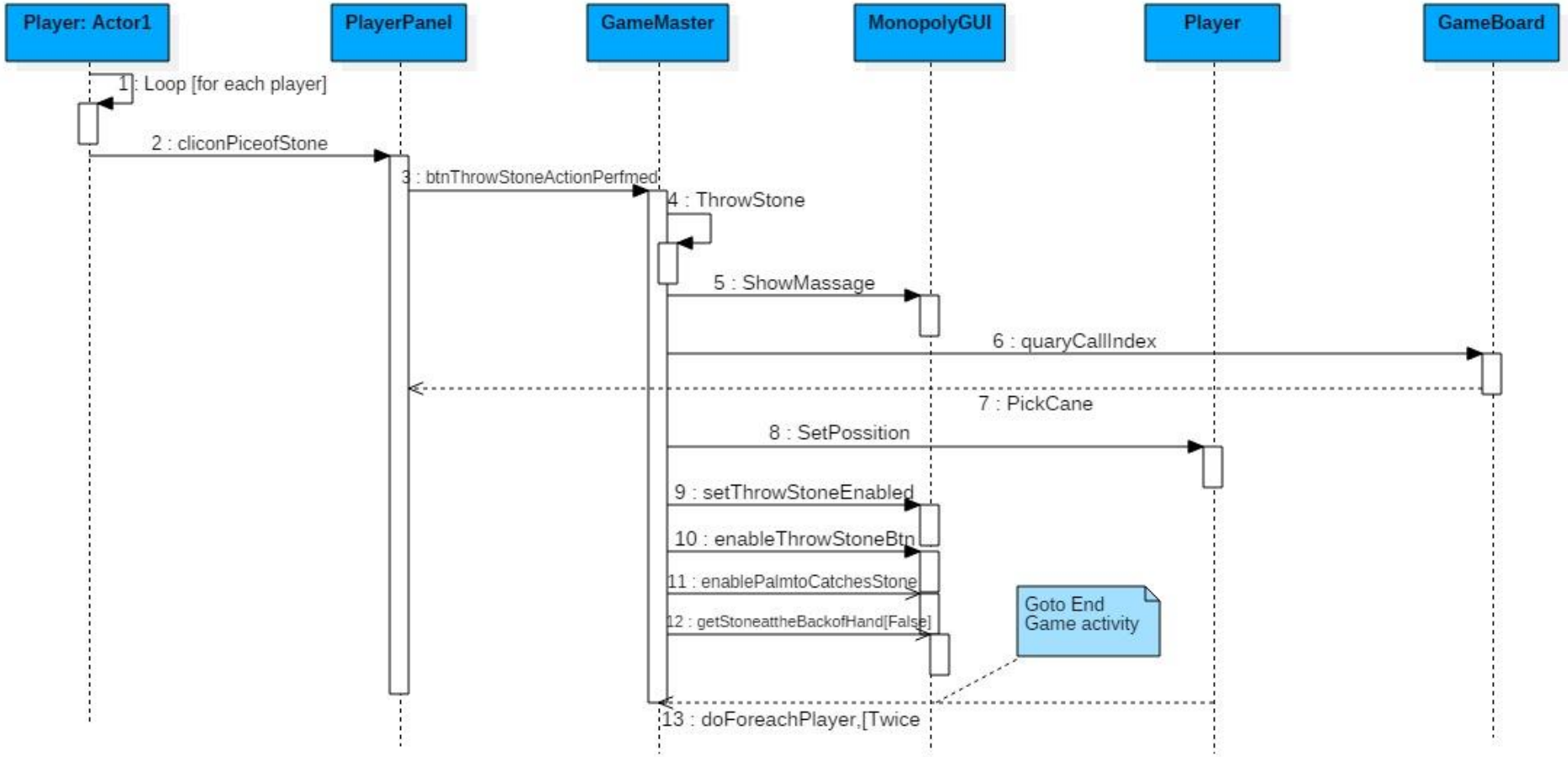

Fig. 1.3 Sequence Diagram of indigenous game model *Kalh-Pellah*

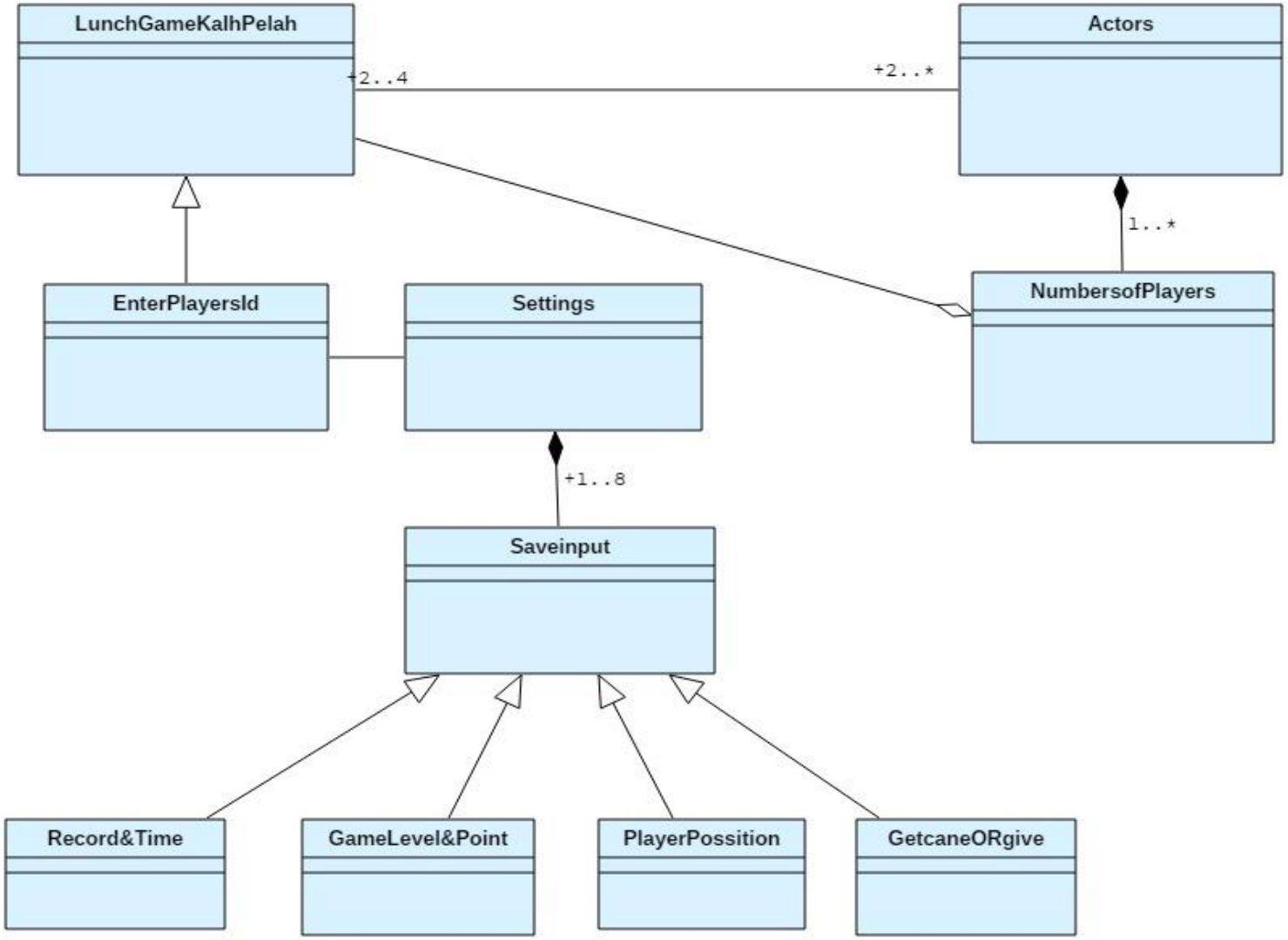

Fig. 1.3 Class Diagram of indigenous game model *Kalh-Pella*h