WIRING CONNECTI ON DIAGRAM

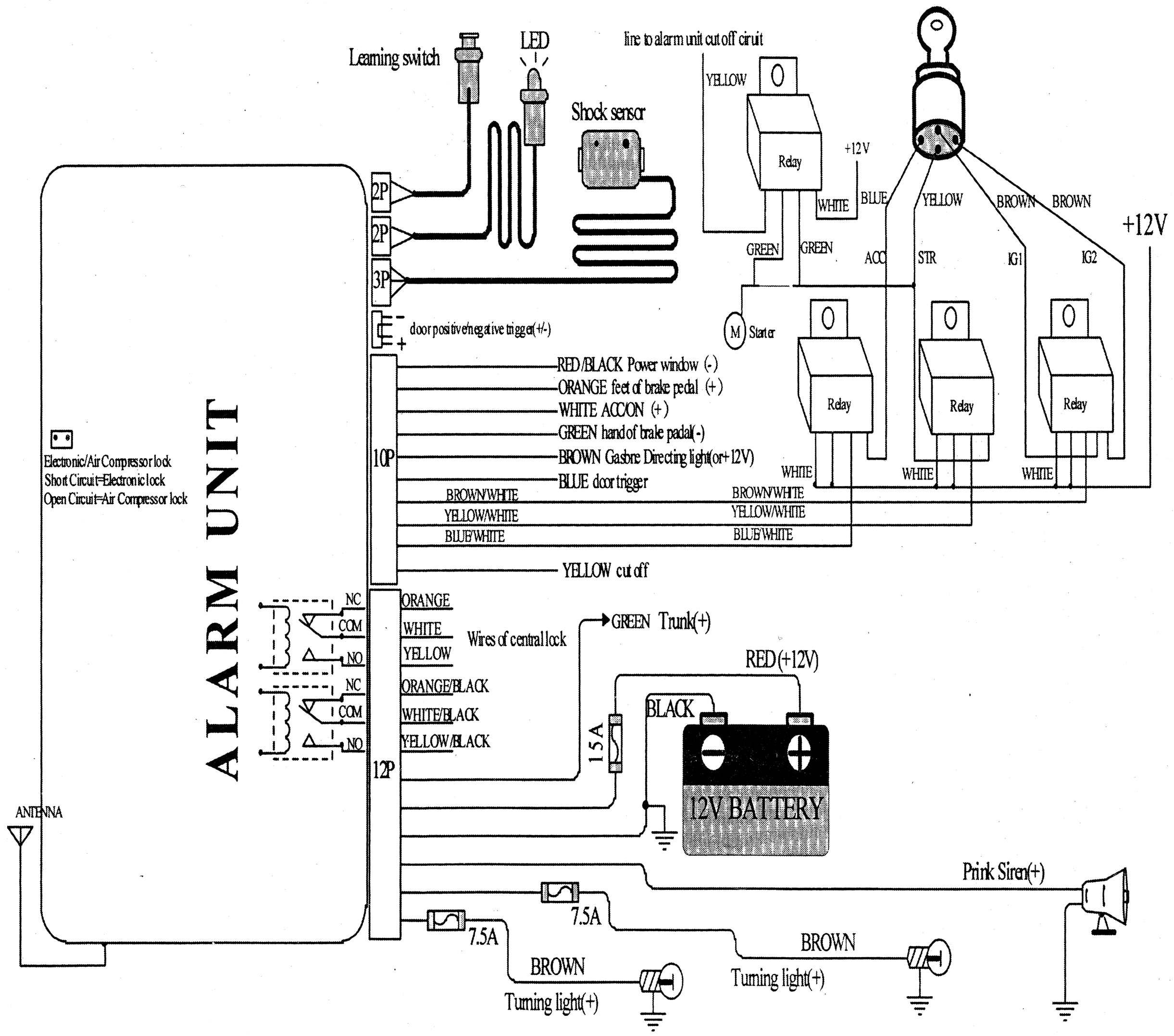

CENTRAL LOCK INSTALLATION DIAGRAM

For cars equipped with central lock and lock motor on driver's side door

FIG1

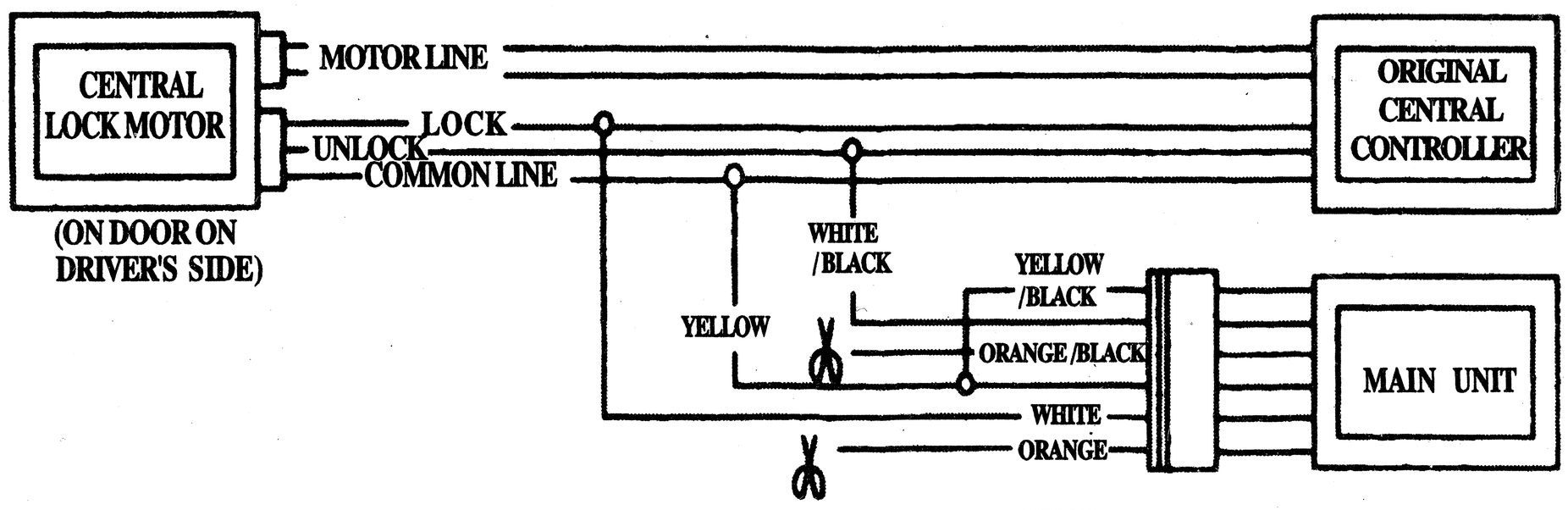

For cars equipped with central lock but no motor on driver's side,add master motor and rod.

FIG2

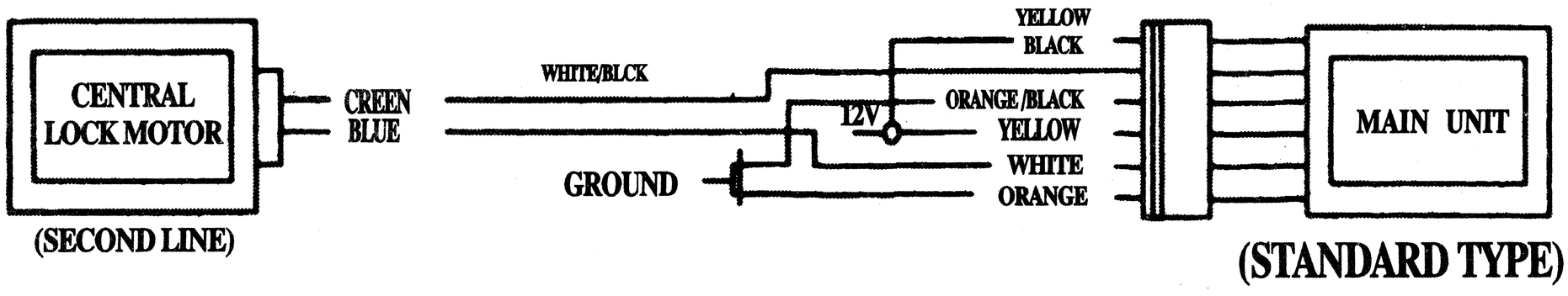

For cars equipped with central lock and a control switch on the driver's side.

FIG3

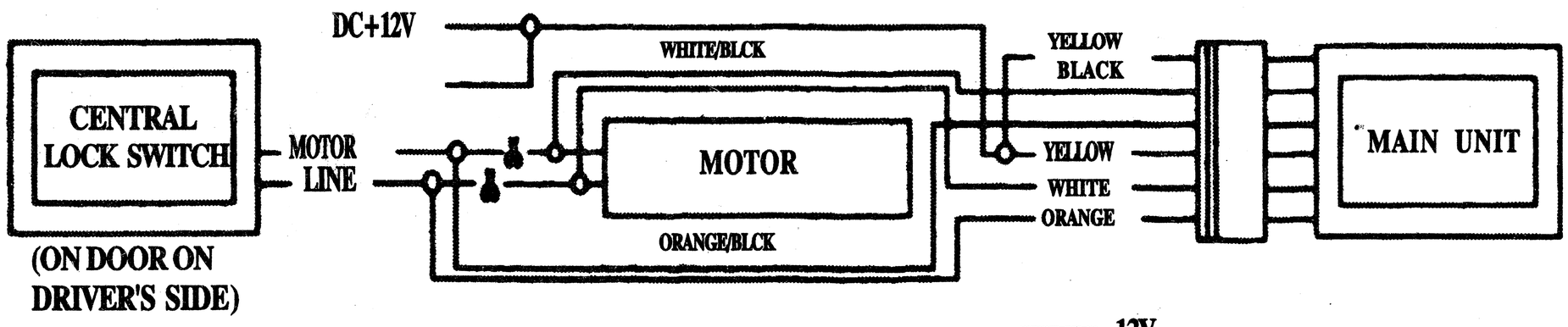

For cars equipped with, ari compressor controlled central door locks. Eg Audi, VW,Mercedes.
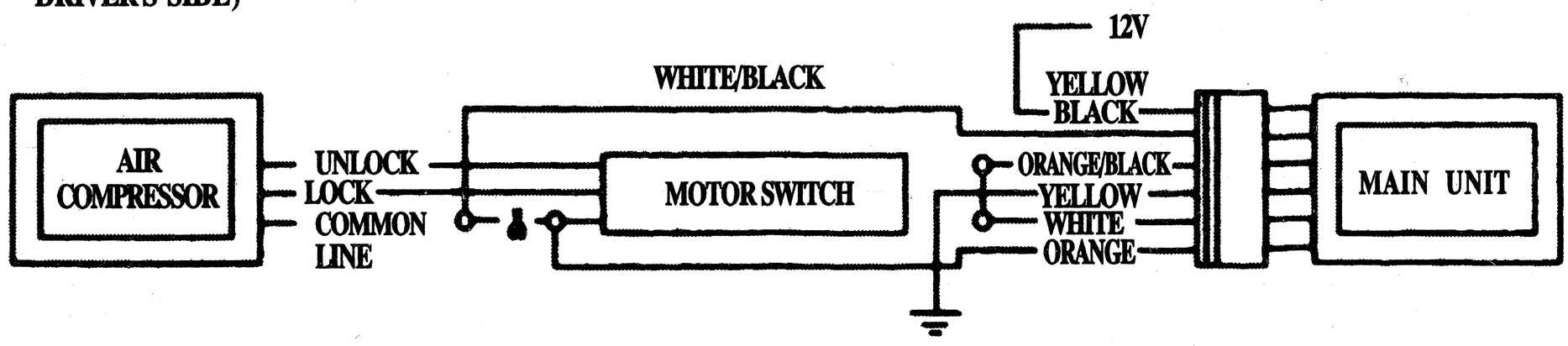
FIG4