QLS Schematic
2/2/78

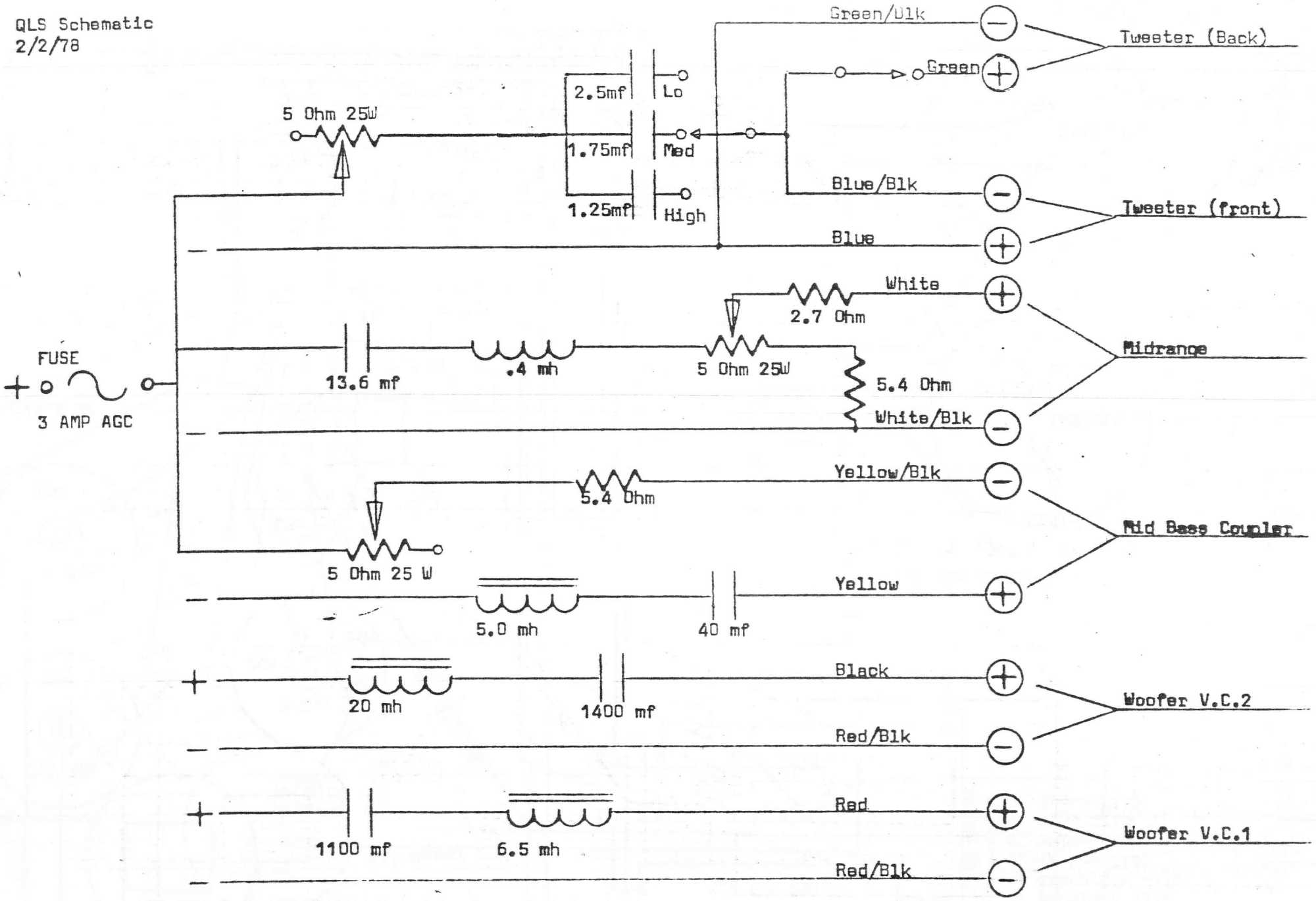

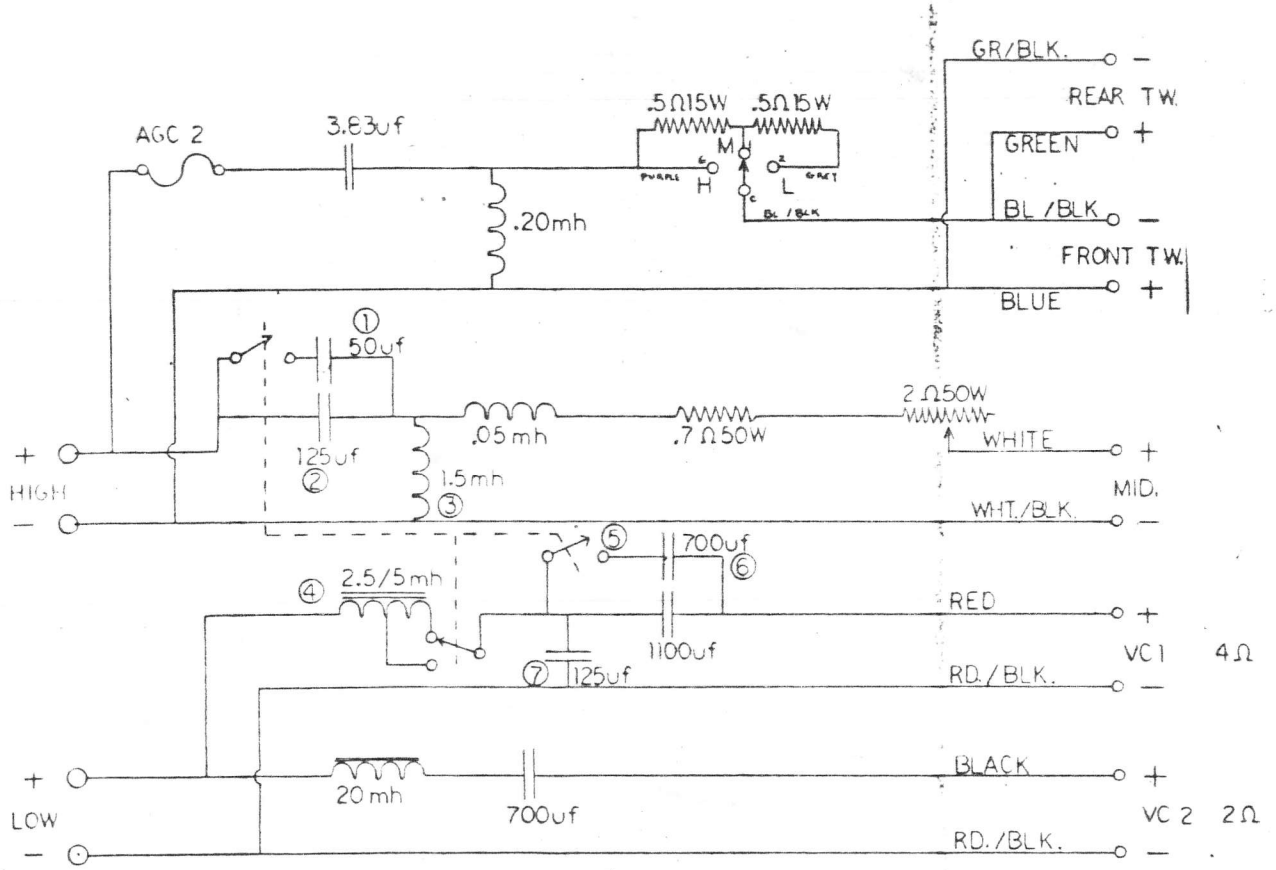

NOTE: 3PDT SWITCH SHOWN IN SINGLE AMP POSITION

TOLERANCES UNLESS OTHERWISE SPECIFIED FRACTIONS ± DEC. ± ANGLES ±		WIRING DIA. RS 2.5	
APPROVALS	DATE		
DRAWN GPB	6-26-79		
CHECKED		SCALE	SIZE B / DRAWING NO. DD60-0217-1
		DO NOT SCALE DRAWING	SHEET

BISHOP GRAPHICS, INC. REORDER NO. 20521

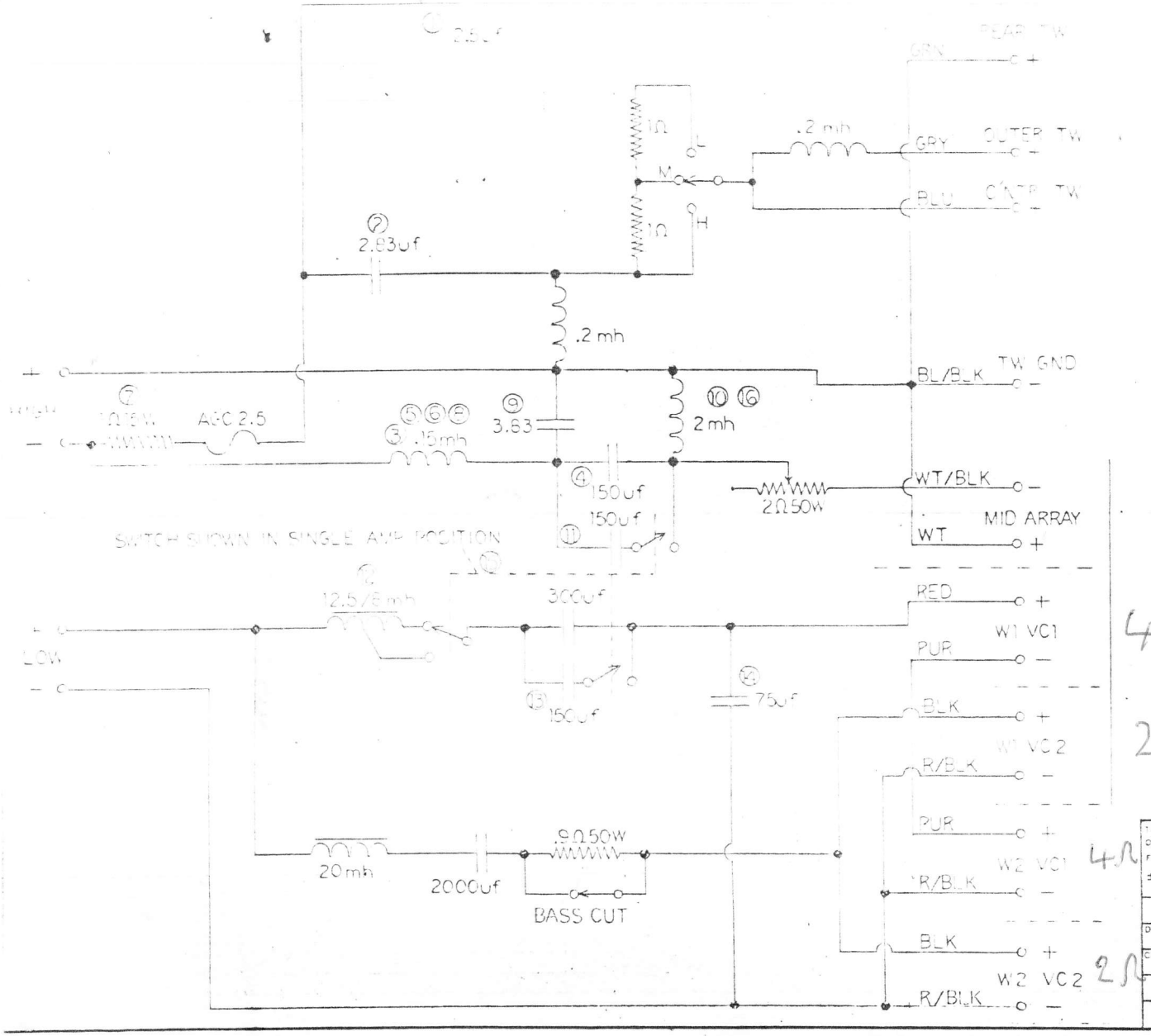

TOLERANCES UNLESS OTHERWISE SPECIFIED FRACTIONS ± DEC. ± ANGLES ±		RS 4.5 WIRING SCHEMATIC
APPROVALS	DATE	
DRAWN	1-23-79	
CHECKED		SCALE / SIZE B / DRAWING NO. DD60-0209-1
		DO NOT SCALE DRAWING / SHEET