cSFP 1.25G 2ch 1310nm/1490nm Single mode Optical Transceiver

Description

The BlueOptics© BO28C3443620D cSFP transceiver is a high performance, cost effective module supporting data-rate up to 1.25Gbps with 20 Kilometer link length on single mode fiber.

BlueOptics© transceivers are 100% compliant with cSFP Multi-Source Agreement (MSA).

All BlueOptics© cSFP transceivers are also available with digital diagnostic function compliant to MSA SFF-8472.

Using digital diagnostic, BlueOptics© cSFP transceivers provide the following real time information:

- Supply voltage
- Laser bias current
- Laser average output power
- Laser received input power
- Temperature

The transceiver consists of up to five sections: A FP or DFB laser transmitter, a PIN photodiode, a trans-impedance preamplifier (TIA), the LD Driver and the optional digital diagnostic function.

Applications

- ✓ Gigabit Ethernet
- ✓ 1x Fibre Channel
- ✓ Switch to Switch Interface
- ✓ Router/Server Interface

Features

- ✓ Up to 1.25Gb/s data links compliant to 802.3ah 1000Base-BX
- ✓ FP laser transmitter for BO28C3443620D
- ✓ PIN photo-detector
- ✓ Up to 20km on 9/125µm SMF
- ✓ Compatible to standard SFP Bidi
- ✓ Hot-pluggable cSFP footprint
- ✓ Duplex LC/UPC type pluggable optical interface
- ✓ Low power dissipation
- ✓ Metal enclosure, for lower EMI
- ✓ RoHS compliant and lead-free
- ✓ Single +3.3V power supply
- ✓ Compliant with SFF-8472
- ✓ Case operating temperature
  - Commercial: 0°C to +70°C
  - Extended: -10°C to +80°C
  - Industrial: -40°C to +85°C

Your first choice for first quality prodcts
www.cbo-it.de
cbo connecting technology

Warnings

Handling Precautions: This device is susceptible to damage as a result of electrostatic discharge (ESD). A static free environment is highly recommended.

Laser Safety: Even small radiation emitted by laser devices can be dangerous to human eyes and lead to permanent eye injuries. Be sure to avoid eye contact with direct or indirect radiation.

Warranty

Every BlueOptics© transceiver comes with a 5 year replacement warranty and lifetime support.
For a warranty inquiry, please contact your CBO sales representative.
This warranty only covers the first user of the equipment.

Important Notice

Performance figures, data and any illustrative material provided in this data sheet are typical and must be specifically confirmed in writing by CBO before they become applicable to any particular order or contract. In accordance with the CBO policy of continuous improvement specifications may change without notice.

The publication of information in this data sheet does not imply freedom from patent or other protective rights of CBO or others.

Further details are available from any CBO sales representative.

Installation

Before installation attach an ESD-preventive wrist to ensure not to damage the transceiver or hardware.

BlueOptics© BO28C3443620D can be installed in any Small Form Factor Pluggable (cSFP) port. You can install the BO28C3443620D regardless if the system is powered on or off, because it is hot-swappable.

Open the bale clasp by pressing it down and insert the transceiver into the cSFP port.

You can now connect your cable.

Order Information

Part No.	Temp.	DDM
BO28C3443620D	0°C to +70°C	✓
BO28C3443620DEX	-10°C to +80°C	✓
BO28C3443620DIN	-40°C to +85°C	✓

Regulatory Compliance

Feature	Standard	Co.
Electrostatic Discharge (ESD)	- IEC/EN 61000-4- 2	✓
Electromagnetic Interference (EMI)	- FCC Part 15 Class B EN 55022 - Class B (CISPR 22A)	✓
Laser Eye Safety	- FDA 21CFR 1040.10, 1040.11 - IEC/EN 60825-1, 2	Class 1 ✓
Component Recognition	- IEC/EN 60950, UL	✓
RoHS	- 2002/95/EC	✓
EMC	- EN61000-3	✓

Your first choice for first quality prodcts
www.cbo-it.de
cbo connecting technology

1. Absolute Maximum Ratings

Parameter	Symbol	Min.	Typ.	Max.	Unit
Storage Temperature	Ts	-40		85	ºC
Storage Ambient Humidity	HA	5		95	%
Power Supply Voltage	VCC	-0.5		4	V
Signal Input Voltage		-0.3		Vcc+0.3	V
Receiver Damage Threshold		+5			dBm

2. Recommended Operating Conditions

Parameter	Symbol	Min.	Typ.	Max.	Unit	Note
Case Operating Temperature	Tcase	0		70		BO28C3443620D
		-10		80	ºC	BO28C3443620DEX
		-40		85		BO28C3443620DIN
Ambient Humidity	HA	5		70	%	
Power Supply Voltage	VCC	3.13	3.3	3.47	V	
Power Supply Current	ICC			450	mA	
Power Supply Noise Rejection				100	mVp-p	100Hz to 1 MHz
Data Rate			1250/1250		Mbps	TX Rate/ RX Rate
Transmission Distance				20	KM	
Coupled Fiber	Single mode fiber					9/125um SMF

3. Electrical Interface Characteristics

Parameter	Symbol	Min.	Typ.	Max.	Unit	Note
Transmitter						
Total Supply Current	I_{CC}			A	mA	1
Transmitter Disable Input-High	V_{DISH}	2		Vcc+0.3	V	
Transmitter Disable Input-Low	V_{DISL}	0		0.8	V	
Transmitter Fault Input-High	V_{DISL}	2		Vcc+0.3	V	
Transmitter Fault Input-Low	V_{TxFH}	0		0.8	V	
Receiver						
Total Supply Current	I_{CC}			B	mA	1
LOSS Output Voltage-High	V_{LOSH}	2		VCC+0.3	V	LVTTL
LOSS Output Voltage-Low	V_{LOSL}	0		0.8	V	

Notes:

1. A + B = 450mA (without termination circuit)

Your first choice for first quality prodcts
www.cbo-it.de
cbo connecting technology

4. Transmitter Specifications - Optical

Parameter	Symbol	Min.	Typ.	Max.	Unit	Note
Average Output Power	P_{OUT}	-9		-3	dBm	
Extinction Ratio	ER	9			dB	
Center Wavelength	λC	1260	1310	1360	nm	BO28C3443620D
Spectrum Bandwidth(RMS)	σ			3.5	nm	FP Laser (TX: 1310nm)
Transmitter OFF Output Power	P_{Off}			-45	dBm	
Differential Line Input Impedance	RIN	90	100	110	Ohm	
Jitter P-P	t_J	0		0.1	UI	1
Output Eye Mask	Compliant with IEEE802.3 z (class 1 laser safety)					2

Notes:

1. Measured at 2^7-1 non-return-to-zero PRBS pattern.
2. Transmitter eye mask definition.

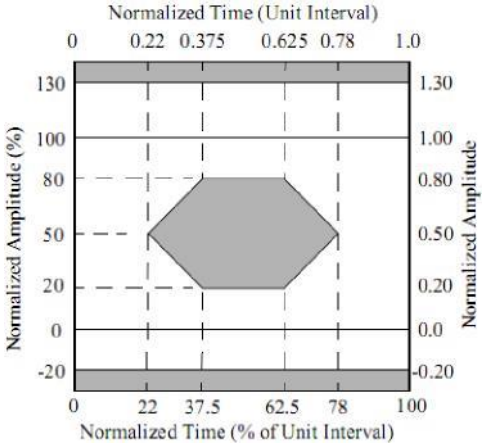

5. Receiver Specifications - Optical

Parameter	Symbol	Min.	Typ.	Max.	Unit	Note
Input Optical Wavelength	λ_{IN}	1480	1490	1500	nm	BO28C3443620D
Receiver Sensitivity	P_{IN}			-19.5	dBM	1
Input Saturation Power (Overload)	P_{SAT}	-3			dBm	
LOS Assert	P_A	-35			dBm	
LOS De-assert	P_D			-22	dBm	
LOS Hysteresis	P_A-P_D	0.5	2	6	dB	

Notes:

1. Measured with Light source 1490nm/1310nm, ER=9dB; BER =<10^{-12} @PRBS=2^7-1 non-return-to-zero.

Your first choice for first quality prodcts
www.cbo-it.de
cbo connecting technology

6. cSFP to Host Connector Pin Out

Pin	Symbol	Name / Description	Note
1	VEE	Transceiver Ground	VEE may be internally connected within the SFP module
2	TX FAULT	Transmitter Fault Indication	TX Fault is an open collector/drain output, which should be pulled up with a 4.7K–10K resistor on the host board. Note 1 for more information
3	TX1_ Disable	Transmitter Disable of Ch A	Module channel A disables function
4	MOD-DEF2	Two-wires interface Data	2 wire serial ID interface, SDA
5	MOD-DEF1	Two-wires interface Clock	2 wire serial ID interface, SCL
6	TD2-	Inverted Transmit Data Input of Ch B	These are the differential transmitter puts. They are AC-coupled, differential lines with 100 differential termination inside the module. The AC coupling is done inside the module and is thus not required on the host board
7	TD2+	Transmit Data Input of Ch B	
8	LOS1	Loss of Signal of Ch A	Loss of Signal detected function. Note 2 for more information.
9	RD2+	Received Data Output of Ch B	These are the differential receiver outputs. They are AC coupled 100 differential lines which should be terminated with 100(differential) at the user SERDES. The AC coupling is done inside the module and is thus not required on the host board.
10	RD2-	Inverted Received Data Output of Ch B	
11	VEE	Transceiver Ground	VEE may be internally connected within the SFP module.
12	RD1-	Inverted Received Data Output of Ch A	These are the differential receiver outputs. They are AC coupled 100 differential lines which should be terminated with 100(differential) at the user SERDES. The AC coupling is done inside the module and is thus not required on the host board.
13	RD1+	Received Data Output of Ch A	
14	LOS2	Loss of Signal of CH B	Loss of Signal detected function. Note 2 for more information.
15	VCCR	Receiver Power	3.3V± 5%. Note 3 for more information
16	VCCT	Transmitter Power	3.3V± 5%. Note 3 for more information
17	TX2_ Disable	Transmitter Disable of Ch B	Module channel B disables function
18	TD1+	Transmit Data Input of Ch A	These are the differential transmitter puts. They are AC-coupled, differential lines with 100 differential termination inside the module. The AC coupling is done inside the module and is thus not required on the host board
19	TD1-	Inverted Transmit Data Input of Ch A	
20	VEE	Transceiver Ground	VEE may be internally connected within the SFP module.

Your first choice for first quality prodcts
www.cbo-it.de
cbo connecting technology

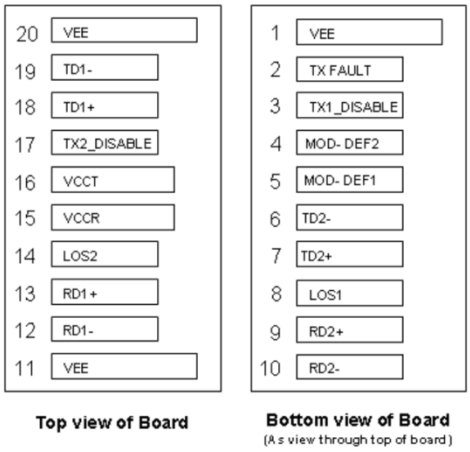

Pinout of Connector Block on Host Board

7. EEPROM Information

The cSFP MSA defines a 256-byte memory map in EEPROM describing the transceivers capabilities, standard interfaces, manufacturer, and other information, which is accessible over a 2 wire serial interface at the 8-bit address 1010000X (A0h).

Data Address	Field Size (Bytes)	Name of Field	Contents (Hex)	Description
0	1	Identifier	XX	Formfactor
1	1	Ext. Identifier	XX	
2	1	Connector	XX	
3-10	8	Transceiver	XX XX XX XX XX XX XX XX	Transmittter Code
11	1	Encoding	XX	
12	1	BR, Nominal	XX	Transceiver Speed
13	1	Reserved	00	
14	1	Length (9µm) km	XX	Max. link length in KM
15	1	Length (9µm) 100m	XX	Max. link length in M
16	1	Length (50µm) 10m	XX	Max. link length in M
17	1	Length(62.5µm)10m	XX	Max. link length in M
18	1	Length (Copper)	XX	Max. link length in M
29	1	Reserved	00	
30-35	16	Vendor name	XX XX XX XX XX XX XX XX XX XX XX XX XX XX XX XX	Vendor name - OEM
36	1	Reserved	00	
37-39	3	Vendor OUI	XX XX XX	
40-55	16	Vendor PN	XX XX XX XX XX XX XX XX XX XX XX XX XX XX XX XX	Product Number - depending on Part
56-59	4	Vendor rev	XX XX XX XX	Vendor revision
60-61	2	Wavelength	XX XX	Transceiver Wavelength
62	1	Reserved	00	
63	1	CC BASE	XX	Checksum of bytes 0-62
64-65	2	Options	XX XX	

Your first choice for first quality prodcts
www.cbo-it.de
cbo connecting technology

66	1	BR, max	XX	
67	1	BR, min	XX	
68-83	16	Vendor SN	XX XX XX XX XX XX XX XX XX XX XX XX XX XX XX XX	Part serial number
84-91	8	Vendor date code	XX XX XX XX XX XX 20 20	Year, Month, Day
92	1	Diagnostic type	XX	Diagnostics
93	1	Enhanced option	XX	Diagnostics
94	1	SFF-8472	XX	Diagnostics
95	1	CC_EXT	XX	Checksum of bytes 64-94
96-255	160	Vendor Specific		

8. Digital Diagnostics / Digital Optical Monitoring

The transceiver provides serial ID memory contents and diagnostic information about the present operating conditions by the 2-wire serial interface (SCL, SDA).

The diagnostic information with internal calibration or external calibration are all implemented, including received power monitoring, transmitted power monitoring, bias current monitoring, supply voltage monitoring and temperature monitoring.

9. Recommended Interface Circuit

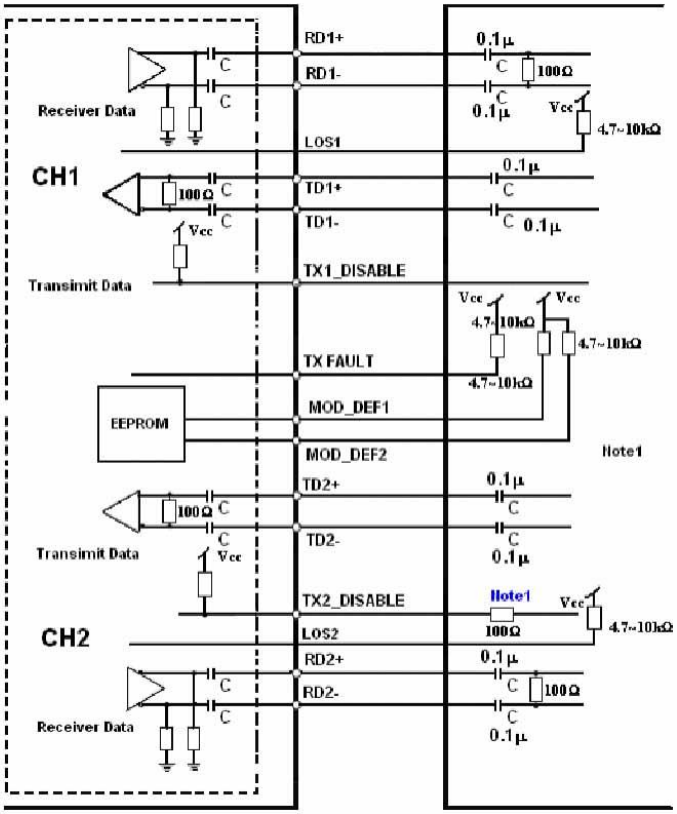

Note1: Recommendation 100Ω series resistance on host board.

Your first choice for first quality prodcts
www.cbo-it.de
cbo connecting technology

10. Mechanical Specifications (Unit: mm)

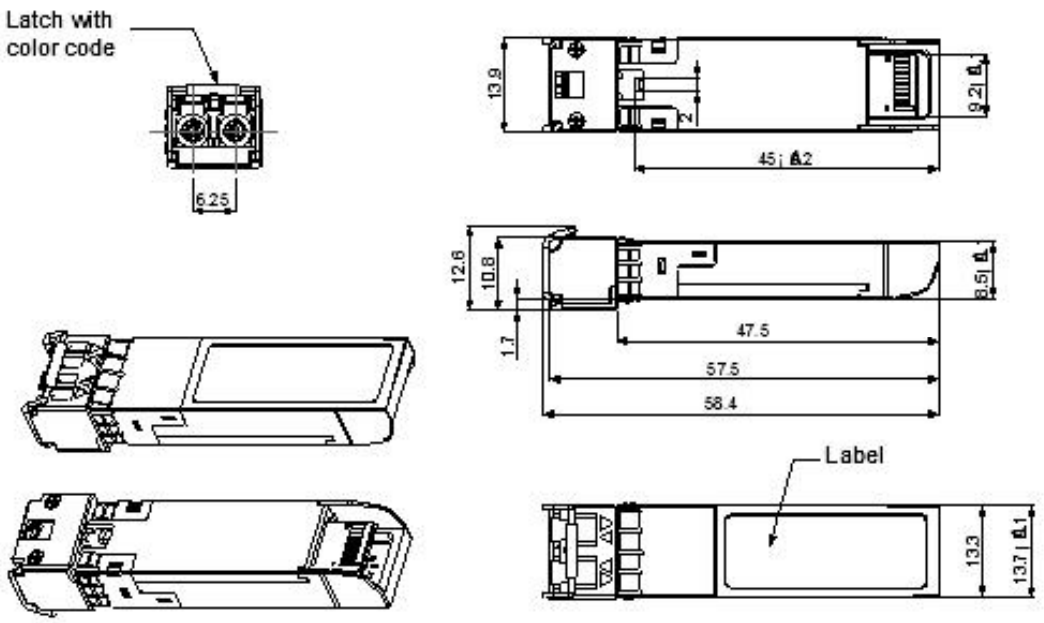

Contact Information

CBO GmbH
Friedhofstraße 25
45478 Mülheim an der Ruhr
Germany

Tel.: 0049 – 208 – 777 247 - 0
Fax.: 0049 – 208 – 777 247 - 99
eMail: info@cbo-it.de
web: www.cbo-it.de