Distributed by SIRINA
An authorized ANSUL
Distributor

Inergen® Clean Agent Systems

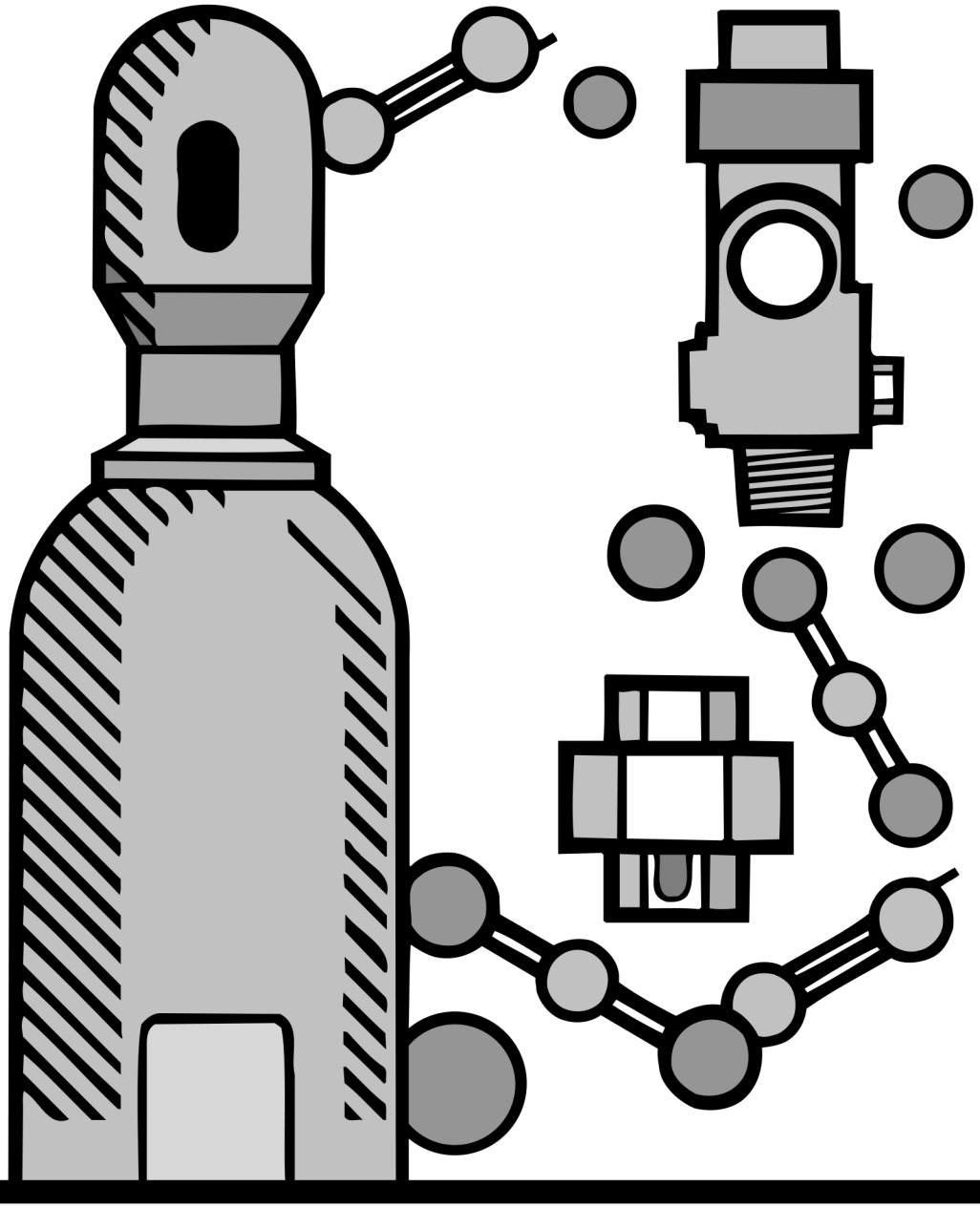

INERGEN® 150-BAR SYSTEMS

Design, Installation, Recharge, and Maintenance Manual

ANSUL®

ANSUL®

A Tyco International Company

One Stanton Street
Marinette, WI 54143-2542
www.ansul.com

Bulletin

Distributed by SIRINA
An authorized ANSUL
Distributor

Bulletin No. 5795

DATE: January 28, 2012

TO: Authorized ANSUL INERGEN and High Pressure Carbon Dioxide System Distributors

FROM: Product Management, Engineered Systems

SUBJECT: NEW Pressure-Operated Siren Introduction

We are pleased to offer a newly designed pressure-operated siren as a component of ANSUL INERGEN 150-Bar and 200-Bar Systems, Marine INERGEN 150-Bar and 200-Bar Systems, High Pressure CO_2 Systems, and Marine High Pressure CO_2 Systems. This new Pressure-Operated Siren (Part No. 437616) will replace the current Pressure-Operated Siren (Part No. 419700).

The pressure-operated siren is used to warn personnel prior to a system discharge. The siren will operate upon activation of the pilot cylinder(s) and will continue to sound through most of the discharge time.

The design requirements for the pressure-operated siren are as follows:

Maximum Pipe Length: 240 ft (73.2 m) of 3/4 in. Schedule 40 pipe, 430 ft (131.1 m) of 1/2 in. Schedule 40 pipe, or 675 ft (205.7 m) of 3/8 in. Schedule 40 pipe

Maximum Elbows: 30

Maximum Sirens: 5

*Design of the system must include agent through the siren if the siren is not located in the hazard area.

System	Flow Rate	Approvals
INERGEN 150-Bar	144 ft^3/min (4.1 m^3/min)	UL Listed; Listed for use with FM Approved Systems
Marine INERGEN 150-Bar	144 ft^3/min (4.1 m^3/min)	UL Listed; USCG Approved
INERGEN 200-Bar	413 ft^3/min (11.7 m^3/min)	UL Listed
Marine INERGEN 200-Bar	413 ft^3/min (11.7 m^3/min)	UL Listed; USCG Approved
High Pressure Carbon Dioxide	14.4 lb/min (6.5 kg/min)	UL Listed; Listed for use with FM Approved Systems
Marine High Pressure Carbon Dioxide	14.4 lb/min (6.5 kg/min)	UL Listed; USCG Approved

NOTE: For commercial INERGEN 150-Bar and 200-Bar systems, the pressure-operated siren is not recommended for use in data center applications.

INERGEN: UL EX-4510
High Pressure CO_2: UL EX-2968

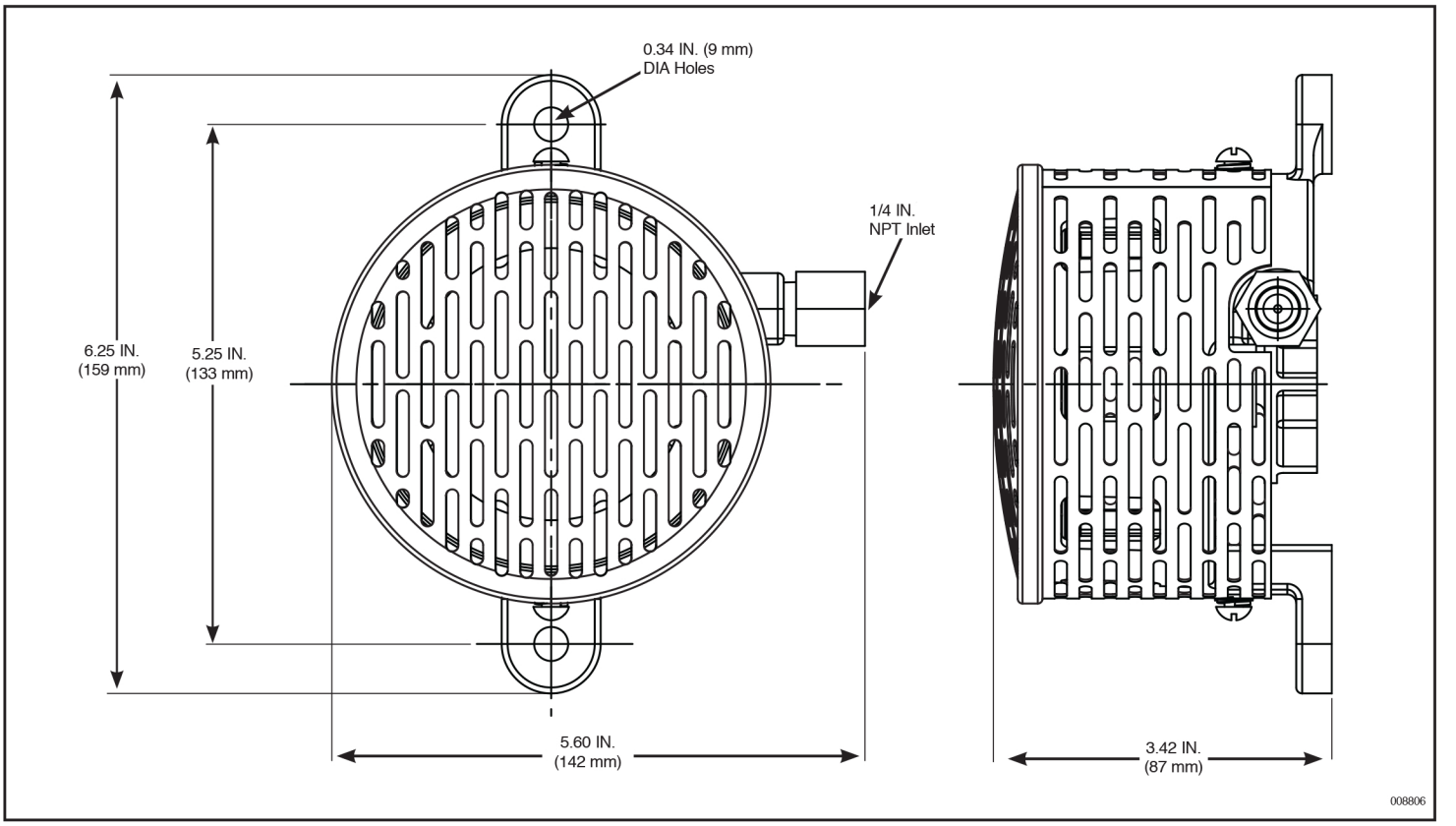

This bulletin is a supplement to the following ANSUL Design, Installation, Operation and Maintenance Manuals:

- INERGEN 150-Bar (Part No. 416655-12) dated July 12, 2011
- Marine INERGEN 150-Bar (Part No. 426313-01) dated December 18, 2009
- INERGEN 200-Bar (Part No. 430149-03) dated July 12, 2011
- Marine INERGEN 200-Bar (Part No. 432033-01) dated March 1, 2011
- High Pressure CO_2 (Part No. 427604-04) dated July 19, 2011
- Marine High Pressure CO_2 (Part No. 76011-01 dated January 19, 2009

The information contained in this bulletin will be added to the manuals at the next issue date.

Should you have questions regarding this bulletin, please contact your Engineered Systems Territory Manager, or call Technical Services as noted below.

Distributed by SIRINA
An authorized ANSUL
Distributor

INERGEN: UL EX-4510
High Pressure CO_2: UL EX-2968

by Tyco Fire Suppression & Building Products

One Stanton Street
Marinette, WI 54143-2542
www.ansul.com

Bulletin

Bulletin No. 5629

DATE: February 4, 2010

TO: Authorized ANSUL® High Pressure Carbon Dioxide and INERGEN® System Distributors

FROM: Product Management – Engineered Systems

SUBJECT: Header Vent Plug Installation

If you own, sell or service High Pressure CO_2 or INERGEN Systems please read and follow the instructions in this bulletin.

WARNING

FAILURE TO READ AND FOLLOW THE INFORMATION IN THIS BULLETIN INCREASES THE RISK THAT A HIGH PRESSURE CO_2 OR INERGEN SYSTEM MAY INADVERTENTLY DISCHARGE.

This is to advise that a Header Vent Plug (Part No. 40309) **MUST** be installed in all closed sections of the manifold(s) of a High Pressure Carbon Dioxide or INERGEN System. The Header Vent Plug is designed to relieve any residual pressure in the manifold and to close upon a system discharge. The omission of a Header Vent Plug may cause the manifold to build pressure. Under certain conditions this may cause a cylinder in the system to actuate, which would then cause all cylinders on this specific system to actuate.

The following page illustrates an example of a High Pressure Carbon Dioxide Fire Suppression System with Header Vent Plugs (Item No. 12) properly installed. **Note that because the Time Delay pneumatically separates the manifold, a Header Vent Plug (Part No. 40309) is required on the supply side of the time delay. A Header Vent Plug is also required on the downstream side of the time delay when a Selector Valve or Lock-Out Valve could result in a closed section of piping.**

If you know of an installation covered by this PRODUCT SERVICE BULLETIN, we ask that you contact your customer to arrange for a service visit to perform any necessary action. **Your immediate attention is requested in order to avoid property damage or personal injury caused by an inadvertent discharge**.

The content of this bulletin serves as a supplement to the manuals listed below. The information in this bulletin will be added at the next reprint of these manuals:

Manual	Part No.
High Pressure CO_2 Systems	427604-3
INERGEN 150-Bar Systems	416655
INERGEN 150-Bar Marine Systems	426313
INERGEN 200-Bar Systems	430149
INERGEN 200-Bar Marine Systems	432033

Distributed by SIRINA
An authorized ANSUL
Distributor

TYPICAL CARBON DIOXIDE FIRE SUPPRESSION SYSTEM WITH REMOTE PRESSURE ACTUATION

Item No.	Part No.	Description
1	426613	100 lb (45.4 kg) Cylinder with CV-98 Valve
2	427082	CV-98 Flexible Discharge Bend
3	423309	CV-98 Lever Release
4	42514	Connecting Link
5	As Req'd	Adaptor, Elbow and Tee
6	418731	Marine Actuation Station
7	As Req'd	Time Delay
8	As Req'd	Selector Valve
9	428566	Pressure Operated Stackable Actuator
10	427207	Lever Release
11	25627	1/4 in. Check Valve
12	40309	Vent Plug
13	40094	1/2 in. Header Safety
14	As Req'd	Cylinder Back Frame Assembly
15	As Req'd	Cylinder Clamp (2 or 3 Cylinders)
16	73252	100 lb (45.4 kg) Cylinder Nut and Bolt
17	41917	Maintenance Plate
18	As Req'd	Alarm Warning Plate
19	As Req'd	Entrance Warning Plate
20	As Req'd	Instruction Chart
21	41908	Nameplate (Cylinder Release)
22	41908	Nameplate (Valve Release)
23	46250	Pneumatic Switch
24	419700	Pressure Operated Siren
25	As Req'd	Selector Valve Pneumatic Actuation Line Kit
26	42278	Odorizer

Distributed by SIRINA
An authorized ANSUL
Distributor

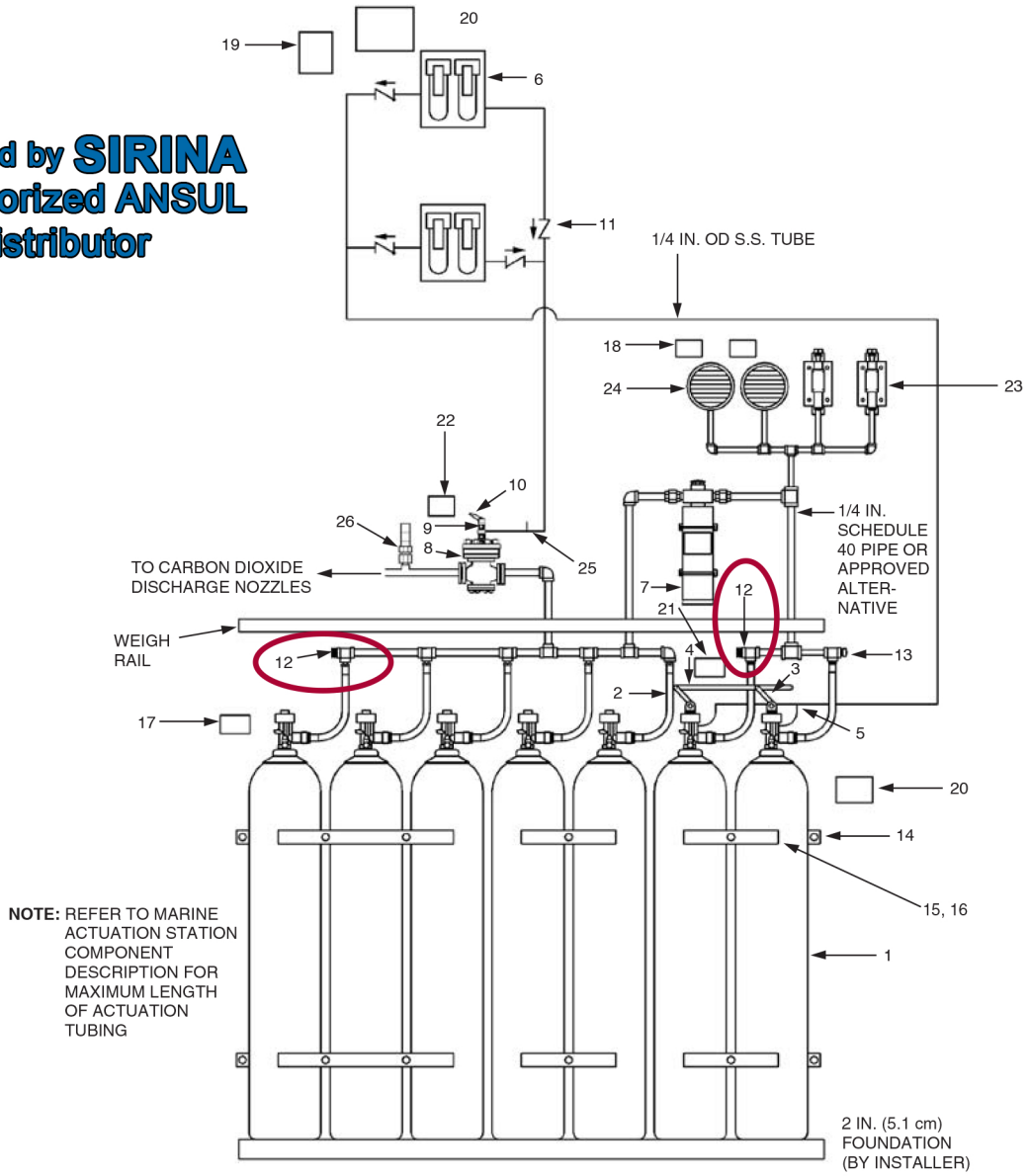

Should you have any questions regarding this bulletin, please contact your Engineered Systems Sales Manager or call Technical Services as listed below.

ANSUL® Innovative Fire Solutions
tyco Fire Suppression & Building Products

One Stanton Street
Marinette, WI 54143-2542
715 735-7411
www.ansul.com

Bulletin

Distributed by SIRINA
An authorized ANSUL
Distributor

Bulletin No. 5408a

DATE: February 23, 2009

TO: Authorized ANSUL® High Pressure Carbon Dioxide and INERGEN® System Distributors

FROM: Quality Assurance

SUBJECT: **Pneumatic Actuation of Selector Valves - Carbon Dioxide and INERGEN Systems**

If you own, sell or service High Pressure CO_2 or INERGEN Systems which employ pneumatic actuation of selector valves, please read and follow the instructions in this BULLETIN.

WARNING

FAILURE TO READ AND FOLLOW THE INFORMATION IN THIS BULLETIN INCREASES THE RISK THAT A HIGH PRESSURE CO_2 OR INERGEN SYSTEM MAY FAIL TO OPERATE AS INTENDED.

Product Service Bulletin No. 5408, dated September 4, 2008 advised that directional/selector valve(s), when actuated with a Pneumatic Actuator (Part No. 428566) through an actuation line with Line Vents (Part Nos. 28037, 828037, 42175 or 842175), may not remain open for the complete discharge, potentially interfering with the ability of the system to suppress a fire. The directional/selector valve will function as intended if actuated manually or electrically.



Pneumatic Actuator
(Part No. 428566)

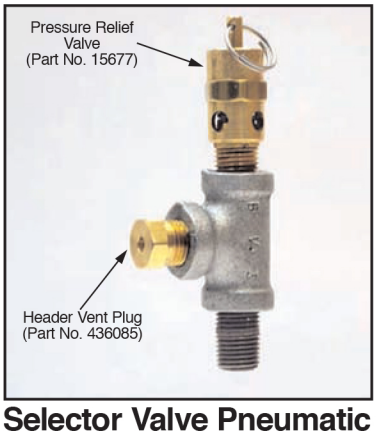

Selector Valve Pneumatic Actuation Line Kit
(Part No. 436127)

This is to advise that new installations which utilize Pneumatic Actuator(s) (Part No. 428566), MUST incorporate a Selector Valve Pneumatic Actuation Line Kit (Part No. 436127) in the directional/selector valve actuation line for each Pneumatic Actuator. Each Selector Valve Pneumatic Actuation Line Kit shall be installed within 1 foot (0.3 m) of each Pneumatic Actuator. One Selector Valve Pneumatic Actuation Line Kit is required for each Pneumatic Actuator used in the system. Each Header Vent Plug (Part No. 436085) and Safety Relief Valve (Part No. 15677) shall be installed with a torque of 125 in.-lb (14 N-m).

UL EX2968 and UL EX4150

After complete system discharge, all pressure in each directional/selector valve actuation line must be relieved by pulling the ring on the Pressure Relief Valve (Part No. 15677).

Line Vents (Part Nos. 28037, 828037, 42175 and 842175) **MUST NOT** be installed anywhere in the directional/selector valve actuation line as the directional/selector valve may not remain open during a complete system discharge, potentially interfering with the ability of the system to suppress a fire. Line Vents are designed to be installed only in the actuation line of the cylinder valves.

This bulletin serves as a supplement to the manuals listed below. This information will be added at the next reprint of these manuals:

Manual	Part No.
High Pressure CO_2 Systems	427604-3
Marine High Pressure CO_2 Systems	76011-1
INERGEN 150-Bar Systems	416655
Marine INERGEN 150-Bar Systems	426313
INERGEN 200-Bar Systems	430149
Marine INERGEN 200-Bar Systems	432033

To order the Selector Valve Pneumatic Actuation Line Kit (Part No. 436127) or for any questions you may have pertaining to this BULLETIN, please contact Quality Assurance at 1-800-862-6785 or 1-715-735-7415, then press 6.

Distributed by SIRINA
An authorized ANSUL
Distributor

ANSUL
Innovative Fire Solutions

tyco
Fire Suppression
& Building Products

One Stanton Street
Marinette, WI 54143-2542
715 735-7411
www.ansul.com

Bulletin

Bulletin No. 5427

DATE: October 29, 2008

TO: INERGEN® 150-Bar and 200-Bar System Manual Holders

FROM: Product Management

SUBJECT: Supplement to INERGEN System Technical Manuals

This bulletin is being issued to update or revise the information in the currently published INERGEN System Design, Installation, Recharge and Maintenance Manuals: 150-Bar (Part No. 416655-11) dated March 1, 2006 and 200-Bar (Part No. 430149-2) dated March 1, 2006. This UL-approved bulletin will serve as a supplement until the updated information can be incorporated into the next reprint of both manuals.

Below are references to the current manual pages and the updated text (revisions) for each page.

INERGEN 150-Bar System Manual, (Part No. 416655-11)

Page 1-3.4

- Revise “10.4 VDC” Minimum Rated Voltage to read “12.0 VDC”
- Remove asterisk note reading: “Minimum operating voltage is 9.0 VDC”

INERGEN 200-Bar System Manual (Part No. 430149-2)

Page 1-3

- Replace UL file no. “(R5998)” with “(EX-4510)”

Page 3-3

- Revise second bullet point to read, “Discharge time for 90% of the agent shall be more than 30 seconds after actuation of the system but not to exceed 138 seconds or as otherwise required by the Authority Having Jurisdiction.”

Distributed by SIRINA
An authorized ANSUL
Distributor

Distributed by SIRINA
An authorized ANSUL
Distributor

DATE	PAGE	REV. NO.
4-1-94	6-5	1
6-1-94	6-17	1
6-1-94	Appendix – Orifice Code Designators	1
6-1-94	Part No. 417958	Added Pages 15 and 16
2-1-95	INERGEN Valve Parts List	3
11-1-95	5-5.2	New Page
11-1-95	5-5.3	New Page
11-1-95	5-14	New Page
11-1-95	INERGEN Designer	New Page
1-5-98	1-3	5
1-5-98	Pressure Relief Venting Guide	2
5-1-98	5-12	6
5-1-98	7-3	New Page
5-1-98	INERGEN Proposal Information	4
3-1-99	1-3.2	Deleted
3-1-99	1-20.1	New Page
3-1-99	4-1	3
3-1-99	4-2	2
3-1-99	4-3	Removed Not Replaced
3-1-99	5-5.9	New Page
3-1-99	5-11.1	Removed Not Replaced
3-1-99	5-14	2
3-1-99	6-2	2
3-1-99	6-3	4
3-1-99	6-3.1	New Page
3-1-99	Nozzle/Pressure Reducer Range Chart	4
3-1-99	Pilot Cylinder Requirements	Moved to Design

DATE	PAGE	REV. NO.
3-1-99	CV-90 INERGEN Valve Parts List	6
3-1-99	CV Electric Actuator Part List	New Page
3-1-99	Single Row Cylinder Bracketing Parts List	5
3-1-99	Dbl. Row Cyl. Bracketing (Back to Back) Parts List	6
3-1-99	Back to Back Cylinder Bracketing Parts List	5
3-1-99	INERGEN System Flow Program	2
5-1-00	1-15.4	1
5-1-00	6-1	3
5-1-00	6-6.1	3
5-1-00	6-8	3
5-1-00	Orifice Size Chart	4
5-1-00	CV-98 INERGEN Valve Parts List	1
5-1-00	CV-90 Elect. Act. Appli. & Install., Part No. 426882	Deleted
5-1-00	CV-98 Elect. Act. Appli. & Install., Part No. 426003-1	Deleted
5-1-00	CV-90 Elect. Act. Appli. & Install., Part No. 428140	New
5-1-00	CV-98 Elect. Act. Appli. & & Install., Part No. 427423	New
11-1-00	1-1	Deleted
11-1-00	1-2.1	2
11-1-00	1-2.2	Deleted
11-1-00	1-3.5	New
11-1-00	1-3.6	New
11-1-00	1-3.7	New
11-1-00	1-4	Deleted
11-1-00	1-10	Deleted
11-1-00	1-15.2	2
11-1-00	1-15.3	1
11-1-00	1-16.1	2

► Indicates revised information.

Distributed by SIRINA
An authorized ANSUL
Distributor

DATE	PAGE	REV. NO.
11-1-00	1-20.2	New
11-1-00	3-1	6
11-1-00	3-2	7
11-1-00	3-4	New
11-1-00	4-2	3
11-1-00	5-5.8	1
11-1-00	5-6	7
11-1-00	5-7	6
11-1-00	5-8	4
11-1-00	5-9	5
11-1-00	5-10	5
11-1-00	5-11	6
11-1-00	5-15	3
11-1-00	5-16	2
11-1-00	5-17	3
11-1-00	5-18	2
11-1-00	6-6	7
11-1-00	6-7	6
11-1-00	6-9	5
11-1-00	6-10	6
11-1-00	6-11	4
11-1-00	6-12	8
11-1-00	6-13	4
11-1-00	6-14	3
11-1-00	6-15	Deleted
11-1-00	6-16	Deleted
11-1-00	7-1	3

DATE	PAGE	REV. NO.
11-1-00	7-2	6
11-1-00	8-1	6
11-1-00	8-2	4
11-1-00	8-3	5
11-1-00	8-4	4
11-1-00	8-5	2
11-1-00	8-5.1	New
11-1-00	8-6	Deleted
11-1-00	8-7	Deleted
11-1-00	9-1	5
11-1-00	10-1	4
11-1-00	10-2	4
11-1-00	10-3	6
11-1-00	10-4	4
11-1-00	10-5	Deleted
11-1-00	11-2	3
11-1-00	11-11 – 11-69	Deleted
6-1-02	1-4	New
6-1-02	5-1	3
6-1-02	5-2	6
6-1-02	5-3	7
6-1-02	5-4	8
6-1-02	5-5	7
6-1-02	5-5.2	6
6-1-02	5-5.3	6
6-1-02	5-5.4	4
6-1-02	5-5.6	3

▸ Indicates revised information.

Distributed by SIRINA
An authorized ANSUL
Distributor

DATE	PAGE	REV. NO.		DATE	PAGE	REV. NO.
6-1-02	5-5.7	2		3-1-06	1-14.1	4
6-1-02	6-4	5		3-1-06	1-15	7
6-1-02	6-6	8		3-1-06	1-15.1	5
6-1-02	6-7.1	6		3-1-06	1-16	7
6-1-02	11-1	4		3-1-06	1-16.2	1
6-1-02	11-3	3		3-1-06	1-17	8
6-1-02	11-4	3		3-1-06	1-18	4
6-1-02	11-5	3		3-1-06	1-18.1	4
6-1-02	11-6	3		3-1-06	1-18.2	3
6-1-02	11-7	4		3-1-06	1-19	2
6-1-02	11-8	Deleted		3-1-06	1-20	2
6-1-02	11-9	Deleted		3-1-06	1-21	1
6-1-02	11-10	Deleted		3-1-06	1-22	1
3-1-06	1-1.1	4		3-1-06	1-23	1
3-1-06	1-3.1	3		3-1-06	1-24	2
3-1-06	1-3.3	3		3-1-06	F-9312	10
3-1-06	1-3.4	2		3-1-06	F-200045	2
3-1-06	1-4.1	4		3-1-06	MSDS	4
3-1-06	1-5	2		3-1-06	3-3	7
3-1-06	1-6	2		3-1-06	5-5.1	7
3-1-06	1-7	2		3-1-06	5-5.5	4
3-1-06	1-8	1		3-1-06	5-13	7
3-1-06	1-9	4		3-1-06	5-19	1
3-1-06	1-11	2		7-12-11	1-2	New
3-1-06	1-12	5				
3-1-06	1-13	4				
3-1-06	1-14	2				

► Indicates revised information.

ANSUL



ANSUL
INERGEN 150-BAR SYSTEM
DESIGN, INSTALLATION, RECHARGE AND MAINTENANCE MANUAL
ANSUL PART NO. 416655-12

UNDERWRITERS LABORATORIES FILE NO. EX-4510

JULY 12, 2011

Distributed by SIRINA
An authorized ANSUL
Distributor

	Form No.	Pages
I. COMPONENTS		**1-1 – 1-24**
DELETED	— —	1-1
CV-98 CYLINDER SHIPPING ASSEMBLY	F-9877-4	1-1.1
CV-98 CYLINDER SHIPPING ASSEMBLY – BIS APPROVALS	F-2011150	1-2
CV-98 ELECTRIC ACTUATOR	F-9878-2	1-2.1
DELETED	— —	1-2.2
AUTOPULSE CONTROL SYSTEM	F-9308-5	1-3
ANSUL AUTOMAN II-C RELEASING DEVICE	F-9495-3	1-3.1
SELECTOR VALVES	F-99024-3	1-3.3
VALVE ELECTRIC ACTUATION	F-99025-2	1-3.4
PRESSURE OPERATED STACKABLE ACTUATOR	F-2001065	1-3.5
BOOSTER ACTUATOR	F-2001066	1-3.6
HF ELECTRIC ACTUATOR	F-2001067	1-3.7
BOOSTER ACTUATOR/SELECTOR VALVE ADAPTOR	F-2002139	1-4
LEVER RELEASE ACTUATOR	F-9879-4	1-4.1
MANUAL PULL BOX	F-9318-3	1-5
CABLE WITH SWAGED END FITTING	F-9321-3	1-6
CORNER PULLEY	F-9319-4	1-7
DUAL/TRIPLE CONTROL BOXES	F-9322-2	1-8
REMOTE CABLE PULL EQUALIZER	F-9338-4	1-9
DELETED	— —	1-10
PRESSURE BLEEDER PLUG – 1/4 IN.	F-9329-4	1-11
FLEXIBLE DISCHARGE BEND	F-9306-7	1-12
CHECK VALVES	F-9320-6	1-13
HEADER VENT PLUG	F-9334-4	1-14
STAINLESS STEEL ACTUATION HOSE	F-9496-4	1-14.1
PRESSURE REDUCER/UNION	F-9311-9	1-15
PRESSURE REDUCER/NIPPLE	F-9432-5	1-15.1
FLANGED PRESSURE REDUCER	F-99023-2	1-15.2
ORIFICE PLATES	F-99039-1	1-15.3
SINGLE MATING FLANGES	F-99021-1	1-15.4
DISCHARGE NOZZLE – 360°	F-9328-10	1-16
180° DISCHARGE NOZZLE	F-99020-1	1-16.1
NOZZLE DEFLECTOR SHIELD	F-94152-2	1-16.2
CYLINDER BRACKETING	F-9309-8	1-17
PRESSURE SWITCH – DPST	F-9327-6	1-18
PRESSURE SWITCH – DPDT-EXPLOSION-PROOF	F-9324-5	1-18.1
PRESSURE SWITCH – 3PST	F-9326-4	1-18.2
PRESSURE TRIP	F-9323-3	1-19
PRESSURE TEST ASSEMBLY	F-93240-2	1-20
PRESSURE OPERATED SIREN	F-99093	1-20.1
TIME DELAY ASSEMBLY	F-200179	1-20.2

Table of Contents

Distributed by SIRINA
An authorized ANSUL
Distributor

	Form No.	Pages
I. COMPONENTS (Continued)		
▸ NAMEPLATE – MAIN	F-9331-2	1-21
▸ NAMEPLATE – RESERVE	F-9330-2	1-22
▸ WARNING PLATE – INSIDE ROOM WITH ALARM	F-9315-3	1-23
▸ WARNING PLATE – OUTSIDE ROOM WITHOUT ALARM	F-9314-4	1-24
II. SPECIFICATIONS		
SYSTEM SPECIFICATION SHEET	F-9312-10	
AGENT SPECIFICATION SHEET	F-200045-2	
MSDS	F-9759-4	
III. GENERAL INFORMATION		**3-1 – 3-4**
"INERGEN" AGENT		3-1
PERSONAL SAFETY		3-1
TYPE OF SYSTEM		3-1
TYPES OF ACTUATION		3-1
Electrical		3-1
Mechanical		3-1
Pneumatic		3-2
INERGEN FLOW		3-2
TYPE OF DETECTION		3-2
Electronic Control Panel		3-2
Electronic Releasing Device		3-2
SYSTEM LIMITATIONS		3-2 – 3-3
Design Limitations		3-2 – 3-3
Flow Calculation Limitations		3-3 – 3-4
IV. PLANNING		**4-1 – 4-2**
INITIAL GENERAL INFORMATION		4-1
HAZARD INFORMATION		4-1
INERGEN Supply Requirements		4-2
Actuation and Alarm Requirements		4-2
Piping and Wiring Information		4-2
Ventilation and Leakage Concerns		4-2
V. DESIGN		**5-1 – 5-19**
APPLICATION METHOD		5-1 – 5-5.7
Total Flooding		5-1 – 5-5.7
SELECTOR VALVE SYSTEMS		5-5.7 – 5-5.9
SAMPLE APPLICATIONS		5-6

Distributed by SIRINA
An authorized ANSUL
Distributor

Table of Contents

	Form No.	Pages
V. DESIGN (Continued)		
ACTUATION REQUIREMENTS		5-6
Manual		5-6
Pneumatic		5-6
Electric		5-6
Multiple Manifold		5-6
Secondary Pilot Cylinder		5-6
ACCESSORIES		5-7 – 5-8
Mechanical Manual Pull Stations		5-7
Pressure Switch		5-7
Pressure Trip		5-7
Alarms		5-8
Pressure Operated Siren		5-8
Control Panels		5-8
RESERVE SYSTEM		5-8
DEVELOP BILL OF MATERIALS		5-8
“INERGEN” DESIGN CALCULATIONS WORKSHEET	F-93226-6	5-9
FLOODING FACTOR CHART		5-10 – 5-11
ATMOSPHERIC CORRECTION FACTORS CHART		5-12
DISCHARGE TIME CHART		5-13
PIPE SIZE ESTIMATION CHART		5-14
MAXIMUM PIPE PRESSURE CHART		5-15 – 5-17
EQUIVALENT LENGTH CHART		5-18
NOZZLE/PRESSURE REDUCER RANGE CHART		5-19
VI. INSTALLATION		**6-1 – 6-14**
MOUNTING COMPONENTS		6-1 – 6-3.1
Cylinder/Bracket Assembly		6-1 – 6-3.1
Releasing Devices		6-3.1
INSTALLING ACTUATION PIPING		6.3.1 – 6-4
General Piping Requirements		6-3.1
Actuation Piping Installation		6-4
INSTALLING DISTRIBUTION PIPING		6-5 – 6-8
Hanger Applications		6-5
General Piping Requirements		6-6 – 6-6.1
Distribution Manifold and Piping Installation		6-7 – 6-8
MAIN/RESERVE SYSTEM		6-8
INSTALLING DETECTION/ACTUATION SYSTEM		6-9
AUTOPULSE Control System with Electric Actuator		6-9
AUTOPULSE Control System with ANSUL AUTOMAN II-C Release with Pneumatic Actuation		6-9

Table of Contents

Distributed by SIRINA
An authorized ANSUL
Distributor

	Form No.	Pages
VI. INSTALLATION (Continued)		
INSTALLING ACTUATOR		6-10 – 6-11
Pneumatic		6-10
Manual		6-10
Electric		6-11
Booster Actuator		6-11
HF Actuator		6-11
INSTALLING ACCESSORIES		6-11 – 6-14
Manual Pull Station		6-11 – 6-13
Alarms		6-13
Pressure Trip		6-13 – 6-14
Pressure Switch		6-14
VII. TESTING AND PLACING IN SERVICE		**7-1 – 7-3**
TESTING ELECTRIC DETECTION SYSTEM – AUTOPULSE CONTROL SYSTEM		7-2
TESTING ELECTRIC DETECTION SYSTEM – ANSUL AUTOMAN II-C RELEASE		7-2
TESTING SELECTOR VALVE		7-2
DISCHARGE TEST		7-2 – 7-3
VIII. RESETTING AND RECHARGE		**8-1 – 8-5.1**
CLEAR ELECTRICAL EQUIPMENT		8-1
CHECK ELECTRICAL AND MECHANICAL EQUIPMENT		8-1
Piping and Nozzles		8-1
Selector Valve		8-1
Electric Detection System		8-1
Pressure Switch		8-1
Resetting HF Actuator		8-1
Resetting the Booster Actuator		8-1
PLACE SYSTEM BACK IN SERVICE – CV-98 VALVE SYSTEMS		8-2
RECHARGE INERGEN CYLINDERS		8-2
REPLACE METRON PROTRACTOR IN ELECTRIC ACTUATOR		8-3 – 8-4
MANUAL VALVE ACTUATOR		8-4
RESETTING SELECTOR VALVE		8-4
MANUAL PULL STATION		8-4
REPLACE ANSUL AUTOMAN II-C CARTRIDGE		8-5
NOTIFY OWNER		8-5
PRESSURE TEMPERATURE CHART		8-5.1
IX. INSPECTION		**9-1**

Distributed by SIRINA
An authorized ANSUL
Distributor

	Form No.	Pages
X. MAINTENANCE		**10-1 – 10-4**
ANNUAL MAINTENANCE EXAMINATION		10-1 – 10-4
General Information		10-1 – 10-2
Thermal Detection/Electric ANSUL AUTOMAN II-C Release		10-3
Electric Detection/AUTOPULSE Control System		10-4
▸ **XI. TYPICAL APPLICATION**		**11-1 – 11-7**

CV-98 Valve/Cylinder Shipping Assembly

Description

The cylinder is factory filled with INERGEN® agent. A single cylinder may be used or multiple cylinders can be manifolded together to obtain the required quantity of agent for total flooding. The cylinder valve can be actuated electrically, pneumatically, and/or manually with approved valve actuation components. All valves are equipped with an anti-recoil feature.

The cylinders are shipped with a maintenance record card and protective shipping cap attached to the threaded neck of each cylinder. This cap entirely encloses and protects the valve while in shipment.

The equivalent length of the valve is equal to 20 ft. (6.1 m) of 1/2 in. Sch. 40 pipe.

Component	Material	Approvals
Cylinder	Steel	Meets DOT 3AA2300
Valve	Brass	
Safety Relief Valve	Brass	
Valve/Cylinder Assembly		FM Approved UL Listed (EX-4510)
Shipping Cap	Steel	

Shipping Assembly Part No.	Nominal Cylinder Size ft.3	(m3)	Actual INERGEN Agent Quantity ft.3	m3	Approximate Weight lb.	(kg)	Dimension A in.	(cm)	Dimension B in.	(cm)
Shipping Assemblies – Red Standard Paint										
426147	200	(5.7)	205	(5.8)	128	(58)	52.7	(129)	8.5	(21.6)
426148	250	(7.1)	266	(7.5)	169	(77)	57.7	(147)	9.3	(23.5)
426149	350	(9.9)	355	(10.1)	217	(98)	59.7	(152)	10.7	(27.3)
426620	LC-350	(9.9)	355	(10.1)	217	(98)	60.2	(152.9)	10.5	(26.7)
426594	LC-425	(12.0)	429	(12.1)	246	(111.6)	70.5	(179.1)	10.5	(26.7)
426150	435*	(12.3)	439	(12.4)	260	(117.9)	66.9	(170.0)	11.0	(27.9)
Shipping Assemblies – Red Corrosion Resistant Paint										
426256	200	(5.7)	205	(5.8)	128	(58)	52.7	(129)	8.5	(21.6)
426257	250	(7.1)	266	(7.5)	169	(77)	57.7	(147)	9.3	(23.5)
426258	350	(9.9)	355	(10.1)	217	(98)	59.7	(152)	10.7	(27.3)
426621	LC-350	(9.9)	355	(10.1)	217	(98)	60.2	(152.9)	10.5	(26.7)
426595	LC-425	(12.0)	429	(12.1)	246	(111.6)	70.5	(179.1)	10.5	(26.7)
426259	435	(12.3)	439	(12.4)	260	(117.9)	66.9	(170.0)	11.0	(27.9)

* NOTE: For Shanghai version, order Part No. 430935.

Canadian TC Approved

Shipping Assembly Part No.	Nominal Cylinder Size ft.3	(m3)	Actual INERGEN Agent Quantity ft.3	m3	Approximate Weight lb.	(kg)	Dimension A in.	(cm)	Dimension B in.	(cm)
Shipping Assemblies – Red Enamel Paint										
426712	200	(5.7)	205	(5.8)	128	(58)	52.7	(129)	8.5	(21.6)
426713	250	(7.1)	266	(7.5)	169	(77)	57.7	(147)	9.3	(23.5)
426714	350	(9.9)	355	(10.1)	217	(98)	59.7	(152)	10.7	(27.3)
427551	LC-425	(12.0)	429	(12.1)	246	(111.6)	70.5	(179.1)	10.5	(26.7)
426715	435	(12.3)	439	(12.4)	260	(117.9)	66.9	(170.0)	11.0	(27.9)
Shipping Assemblies – Red Epoxy CR Paint										
426716	200	(5.7)	205	(5.8)	128	(58)	52.7	(129)	8.5	(21.6)
426717	250	(7.1)	266	(7.5)	169	(77)	57.7	(147)	9.3	(23.5)
426718	350	(9.9)	355	(10.1)	217	(98)	59.7	(152)	10.7	(27.3)
427552	LC-425	(12.0)	429	(12.1)	246	(111.6)	70.5	(179.1)	10.5	(26.7)
426719	435	(12.3)	439	(12.4)	260	(117.9)	66.9	(170.0)	11.0	(27.9)

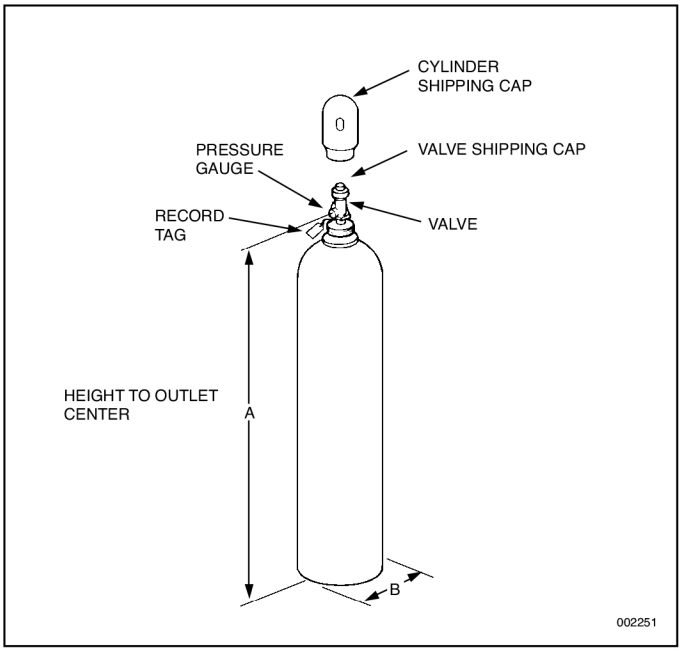

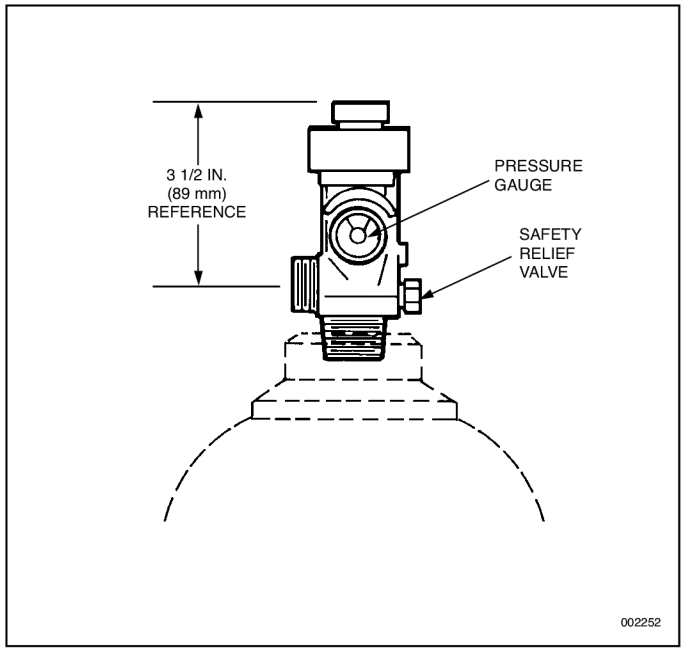

CV-98 INERGEN Valve

The CV-98 valve has a ten (10) year warranty. **The valve requires no internal maintenance.** The valve is sealed closed and must not be disassembled. If there is ever a malfunction of the CV-98 valve, the complete valve must be sent back to Ansul for warranty replacement. **If the external seal is broken, the warranty is voided.**

NOTE: Use Flexible Discharge Bend, Part No. 427082, when attaching valve to supply pipe or manifold.

Distributed by SIRINA
An authorized ANSUL
Distributor

ANSUL and INERGEN are trademarks of Ansul Incorporated or its affiliates.

CV-98 Valve/Cylinder Shipping Assembly – BIS Approvals

Description

The cylinder is factory filled with INERGEN agent. A single cylinder may be used or multiple cylinders can be manifolded together to obtain the required quantity of agent for total flooding. The cylinder valve can be actuated electrically, pneumatically, and/or manually with approved valve actuation components. All valves are equipped with an anti-recoil feature.

The cylinders are shipped with a maintenance record card and protective shipping cap attached to the threaded neck of each cylinder. This cap entirely encloses and protects the valve while in shipment.

The equivalent length of the valve is equal to 20 ft (6.1 m) of 1/2 in. Sch. 40 pipe.

Component	Material	Approvals
Cylinder	Steel, Red Epoxy CR Paint	IS 7285
Valve	Brass	
Safety Relief Valve	Brass	
Valve/Cylinder Assembly		UL Listed (EX-4510) FM Approved
Shipping Cap	Steel, Red Epoxy CR Paint	

Shipping Assembly Part No.	Nominal Cylinder Size ft3	(m3)	Actual INERGEN Agent Quantity ft3	m3	Approximate Weight lb	(kg)	Dimension A in.	(mm)	Dimension B in.	(mm)
438806	435	(12.3)	439	(12.4)	260	(117.9)	66.9	(1700)	11.0	(279)

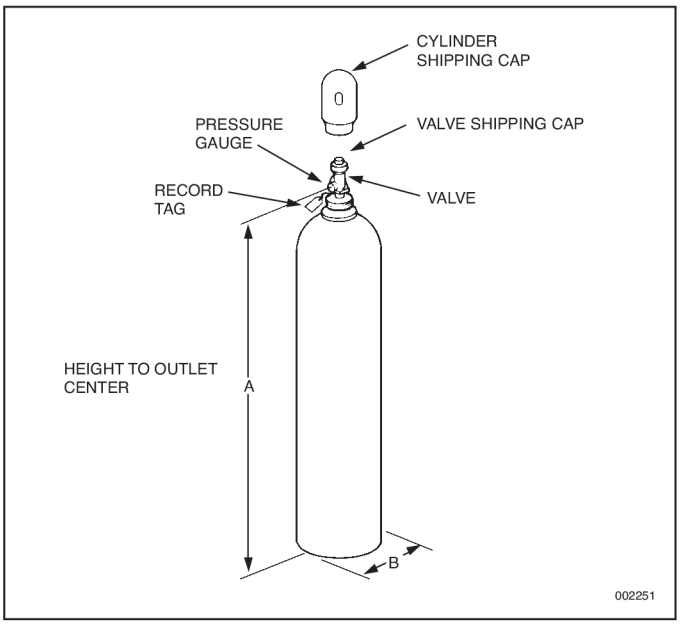

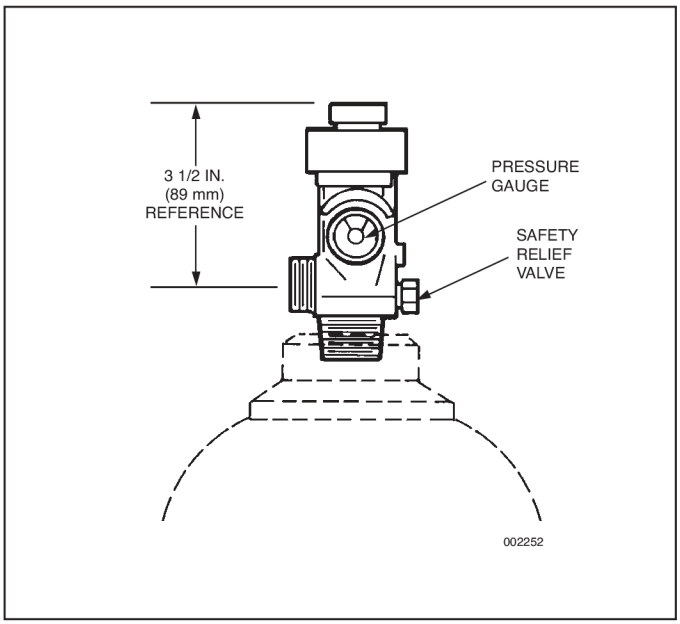

CV-98 INERGEN Valve

The CV-98 valve has a ten (10) year warranty. **The valve requires no internal maintenance.** The valve is sealed closed and must not be disassembled. If there is ever a malfunction of the CV-98 valve, the complete valve must be sent back to Ansul for warranty replacement. **If the external seal is broken, the warranty is voided.**

Note: Use Flexible Discharge Bend (Part No. 427082) when attaching valve to supply pipe or manifold.

Distributed by SIRINA
An authorized ANSUL Distributor

TYCO FIRE PROTECTION PRODUCTS
ONE STANTON STREET
MARINETTE, WI 54143-2542 +1-715-735-7411

Copyright ©2011 Tyco Fire Protection Products
All rights reserved.
Form No. F-2011150

CV-98 Electric Actuator

Description

Electrical actuation of a CV-98 INERGEN® valve is accomplished by a CV-98 electric actuator interfaced through an AUTOPULSE Control System. This actuator can be used in hazardous environments where the ambient temperature range is between 32 °F to 130 °F (0 °C to 54 °C). The electric actuator meets the requirements of N.E.C. Class I, Div. 1, Groups B, C, D and Class II, Div. 1, Groups E, F, G. A maximum of two CV-98 electric actuators can be used on a single AUTOPULSE release circuit. When using either one or two CV-98 electric actuators, a current limiter module, Part No. 427354, must always be used.

The Actuator Shipping Assembly contains a current limiter module along with an installation instruction sheet.

The actuator specifications are:

Nominal Voltage

24 VDC @ .75 amps

In auxiliary or override applications, a manual cable pull actuator can be installed on top of the CV-98 electric actuator by removing the safety cap.

A manual lever actuator, Part No. 423309, is available for use with the CV-98 electric actuator.

The actuator contains a standard 1/2 in. threaded female straight connector for electrical conduit hookup.

The CV-98 electric actuator uses a replaceable METRON® PROTRACTOR which is a device designed to produce a high force mechanical output. The actuator is electrically actuated and will operate within milliseconds.

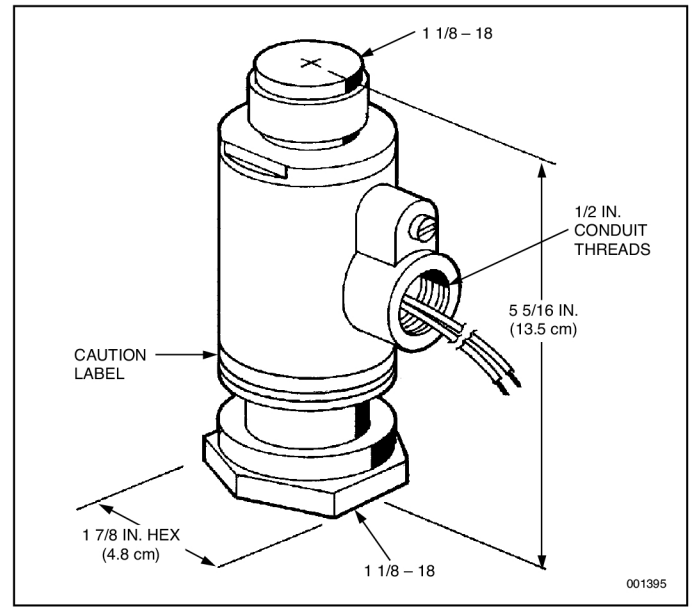

The METRON PROTRACTOR must be replaced after discharge of the INERGEN system.

Shipping Assembly Part No.	Description
423684	CV-98 Electric Actuator
423958	Replaceable METRON PROTRACTOR
427354	Current Limiter Module

Component	Material	Thread Size/Type	Approvals
CV-98 Electric Actuator	Body: Brass METRON PROTRACTOR Plunger: Stainless Steel	1/2 in. Straight Female on Conduit Connection	UL (E62842) FM Approved

ANSUL and INERGEN are trademarks of Ansul Incorporated or its affiliates.

AUTOPULSE® Control System

Description

The AUTOPULSE® Control System provides a range of features and benefits, ranging from simple detection through counting circuits.

Several models of the AUTOPULSE® Control System are available depending on the type of hazard being protected.

Refer to the Ansul Detection and Control Application Manual for detailed information concerning all AUTOPULSE Control Systems.

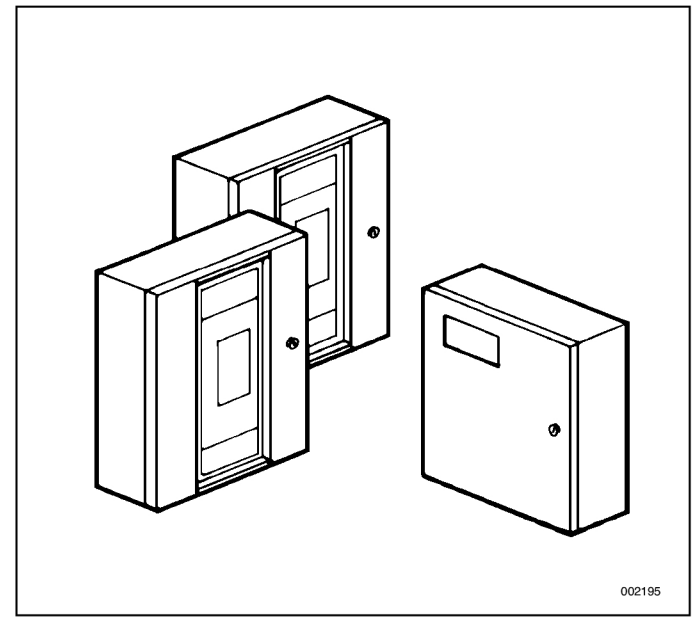

Distributed by SIRINA
An authorized ANSUL
Distributor

ANSUL, AUTOPULSE and INERGEN are trademarks of Ansul Incorporated or its affiliates.

 ©1998 Ansul Incorporated

ANSUL AUTOMAN® II-C Releasing Device

Description

The ANSUL AUTOMAN® II-C Releasing Device consists of a metal enclosure which contains a spring-loaded puncture pin release mechanism, an actuation cartridge, electrical circuitry, and an input/output terminal strip for making electrical connections. The ANSUL AUTOMAN II-C releasing device provides automatic pneumatic actuation of the INERGEN® System. When wired to an AUTOPULSE® Control System, it will provide supervised electric detection and release. It also provides manual actuation using the strike button on the release enclosure and with the optional remote manual cable pull station. When an AUTOPULSE Control System is used, manual actuation is accomplished using an electric manual pull station.

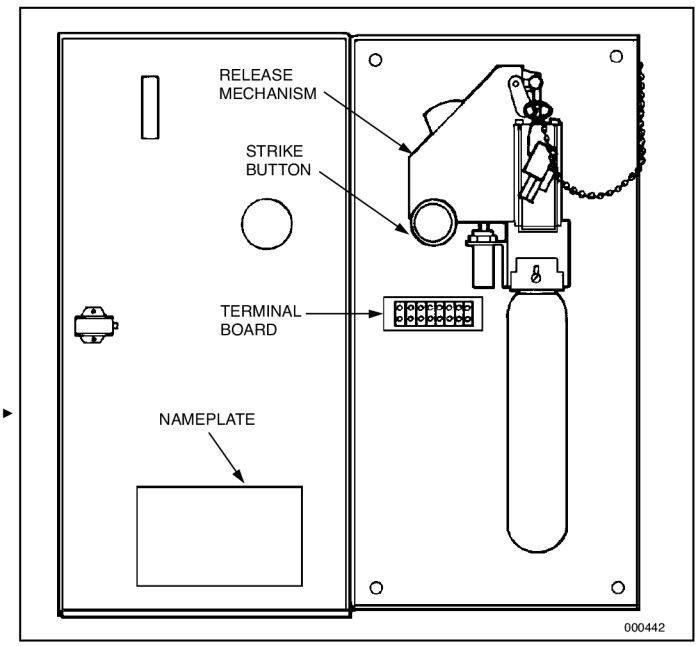

Component	Approvals
ANSUL AUTOMAN II-C Releasing Device	UL Listed (EX-4510)
ANSUL AUTOMAN II-C Releasing Device (Explosion-Proof)	FM Approved

Shipping Assembly Part No.	Description
17728	ANSUL AUTOMAN II-C Releasing Device, 24 VDC
31492	ANSUL AUTOMAN II-C Releasing Device, Explosion-Proof, 24 VDC
32525*	ANSUL AUTOMAN II-C Releasing Device, Explosion-Proof, 120 VAC
32526*	ANSUL AUTOMAN II-C Releasing Device, Explosion-Proof, 240 VAC
5373	LT-30-R Nitrogen Cartridge

*Not FMRC Approved

Distributed by SIRINA
An authorized ANSUL
Distributor

ANSUL, INERGEN, ANSUL AUTOMAN, and AUTOPULSE are trademarks of Ansul Incorporated or its affiliates.

 ©2006 Ansul Incorporated

Inergen® Clean Agent Systems

Selector Valves

Description

Selector valves are used to direct the flow of INERGEN® into a single hazard of a multiple hazard system.

When pneumatic actuation is required for the 1 in. and 2 in. valves, a Stackable Actuator Assembly, Part No. 428566, must be ordered separately.

When electric actuation is required for the 1 in. and 2 in. valves, a Booster Actuator, Part No. 428949, must be ordered separately.

When electric actuation is required for the 2 1/2 in., 3 in. and 4 in. valves, a Selector Valve Electric Actuation Kit, Part No. 426893, must be ordered separately. **NOTE:** These selector valves cannot be pressure operated.

Selector valves can be manually operated by mounting a lever actuator either directly onto the valve or onto the top of the electric actuator. See Lever Release Actuator Component Sheet for correct actuator.

Component	Material	Thread Size/Type	Approvals	Equivalent Length (Sch. 80 Pipe)
▸ 1 in. Selector Valve (Used for 1/2 in., 3/4 in. and 1 in. pipe sizes)	Bronze	1 in. NPT Female	UL (EX-4510), FM	1/2 in. – 1.9 ft. (0.6 m) 3/4 in. – 6.4 ft. (1.9 m) 1 in. – 10.4 ft. (3.2 m)
▸ 2 in. Selector Valve (Used for 1 1/4 in., 1 1/2 in. and 2 in. pipe sizes)	Bronze	2 in. NPT Female	UL (EX-4510), FM	1 1/4 in. – 16.2 ft. (4.9 m) 1 1/2 in. – 22.4 ft. (6.8 m) 2 in. – 67.4 ft. (20.5 m)
▸ 2 in., 2 1/2 in., 3 in. Selector Valve	Ductile Iron	3 in. Flange American Standard Raised Face	UL (EX-4510), FM	2 in. – 17 ft. (5.2 m) 2 1/2 in. – 43 ft. (13.1 m) 3 in. – 78 ft. (23.8 m)
▸ 4 in. Selector Valve	Ductile Iron	4 in. Flange American Standard Raised Face	UL (EX-4510), FM	4 in. – 111 ft. (33.8 m)

NOTE: The 3 in. and 4 in. flanged selector valves latch open upon actuation. They must be manually reset by pulling out the reset knob on the side of the pressure actuator. If the valve is not reset, it will reopen the next time the system is actuated, even if a different hazard requires protection.

Shipping Assembly Part No.	Description
427185	1 in. selector valve – threaded
427150	2 in. selector valve – threaded
857433	2, 2 1/2, 3 in. selector valve – flanged
857445	4 in. selector valve – flanged
426893	Electric actuator kit
842402	Brass cap
428566	Pressure operated stackable actuator

NOTE: A lever actuator, brass cap, or CV-98 electric actuator, must be used with each selector valve. Valve will not operate properly without one of these on top of pressure actuator assembly.

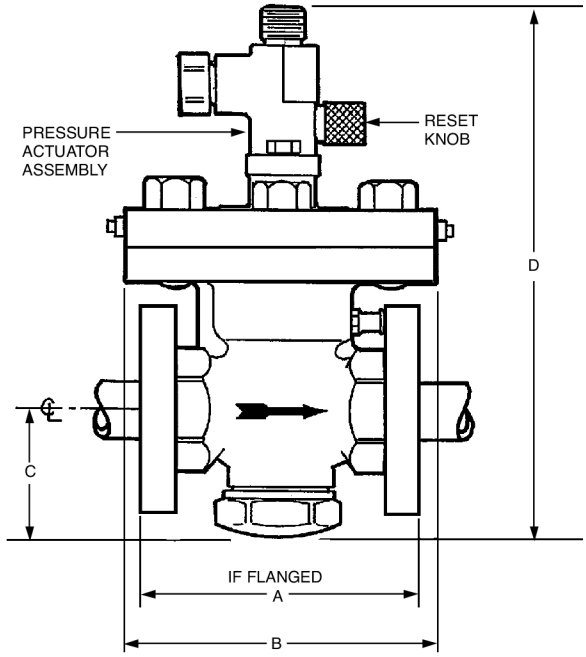

3 IN. AND 4 IN. FLANGED VALVE

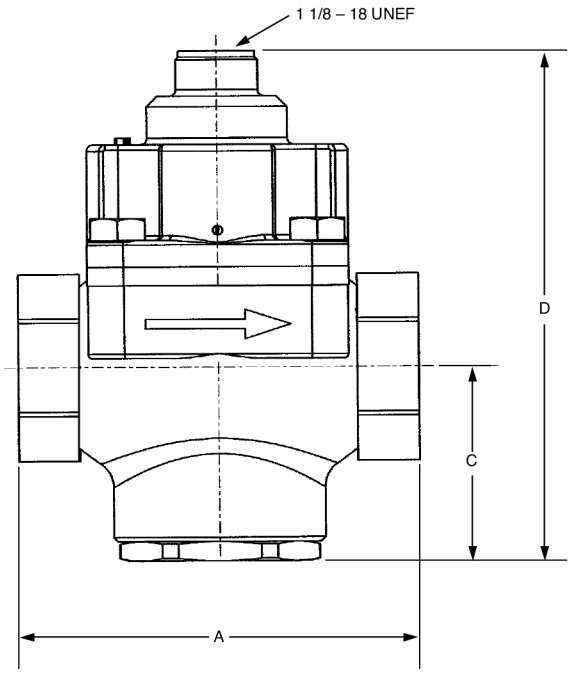

1 IN. AND 2 IN. THREADED VALVE

006035

Valve Size	Body	A in.	A (mm)	B in.	B (mm)	C in.	C (mm)	D in.	D (mm)
1 in.	Threaded – 1 in. NPT female	5 1/2	(140)	—		2 9/16	(67)	7	(178)
2 in.	Threaded – 2 in. NPT female	7 1/2	(191)	—		3 1/2	(89)	8 9/16	(218)
2 in., 2 1/2 in., 3 in.	Flanged – 3 in.	13	(330)	5 3/4	(146)	6 1/8	(156)	16 1/4	(413)
4 in.	Flanged – 4 in.	16	(406)	5 3/4	(146)	8 3/4	(222)	19 7/8	(505)

Distributed by SIRINA
An authorized ANSUL Distributor

ANSUL and INERGEN are trademarks of Ansul Incorporated or its affiliates.

Valve Electric Actuation

Description

Electrical actuation of an agent cylinder and/or selector valves is accomplished by an HF electric actuator interfaced through an AUTOPULSE® Control System. This actuator can be used in hazardous environments where the ambient temperature range is between 0 °F to 130 °F (–18 °C to 54 °C). The HF electric actuator meets the requirements of N.E.C. Class I, Div. 1, Groups B, C, D and Class II, Div. 1, Groups E, F, G. A maximum of two HF electric actuators can be used on a single AUTOPULSE release circuit. When utilizing only one HF electric actuator, an in-line resistor, Part No. 73606, is required in the supervised release circuit.

The actuator specifications are:

Nominal Voltage	Rated Voltage Minimum	Maximum
12 VDC @ 0.57 amps	10.4 VDC*	14.0 VDC

In auxiliary or override applications, a manual-local override valve actuator or a manual cable pull actuator can be installed on top of the HF electric actuator by removing the safety cap.

A reset tool is required to reset the actuator after operation. The actuator contains a standard 1/2 in. threaded female straight connector for electrical conduit hookup.

Shipping Assembly Part No.	Description
73327	HF electric actuator
75433	HF Reset Tool

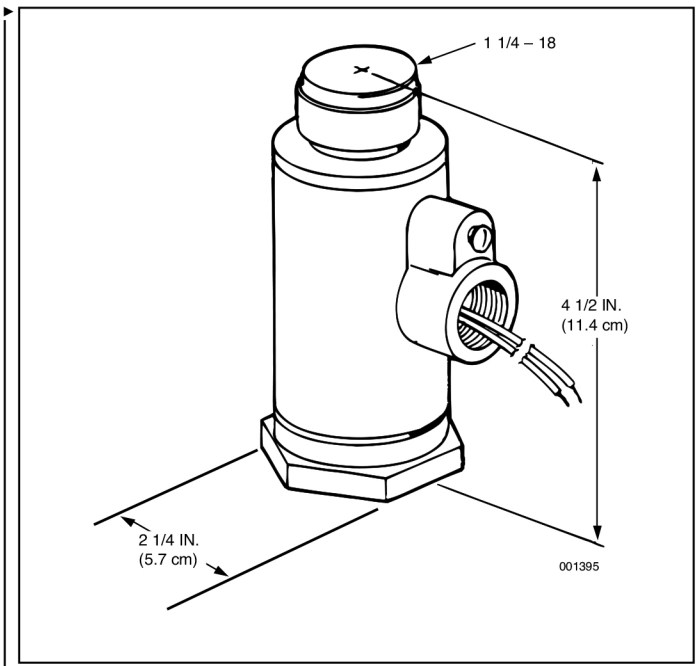

Component	Material	Thread Size/Type	Approvals
HF Electric Actuator	Body: Brass Plunger: Stainless Steel	1/2 in. Straight Female	UL (EX-4510) FM Approved

*Minimum operating voltage is 9.0 VDC.

Description

The Booster Actuator, Part No. 428949, is used when electric actuation is required on the selector valve or the CV-98 cylinder valve. The actuator mounts directly to the component and then a HF electric actuator mounts to the top of the booster actuator.

The Booster Actuator requires resetting after actuation. A Reset Tool, Part No. 429847, is available for this use.

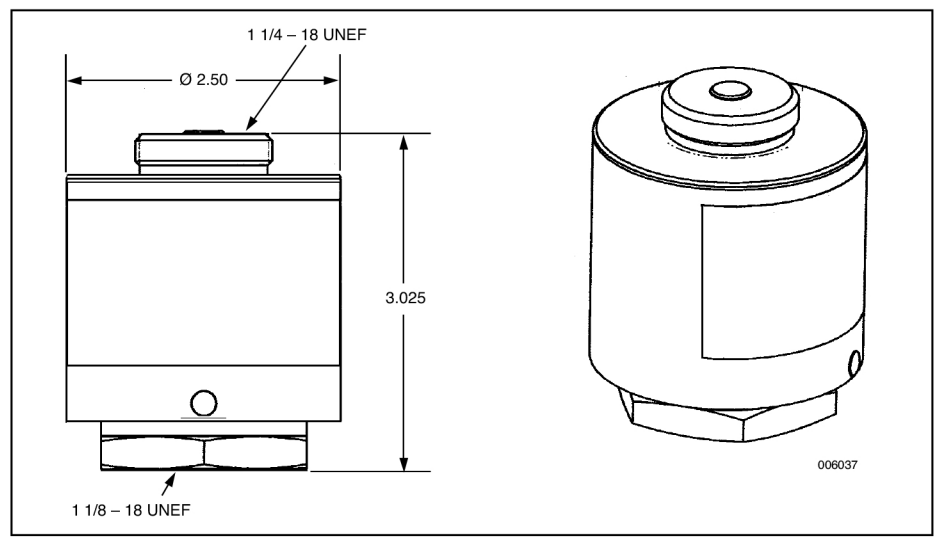

ANSUL, INERGEN, and AUTOPULSE are trademarks of Ansul Incorporated or its affiliates.

 ©2006 Ansul Incorporated

Pressure Operated Stackable Actuator

Description

The pressure operated stackable actuator, Part No. 428566, is necessary when pneumatic actuation is required on a 1 in. or 2 in. selector valve. This actuator is installed on top of the selector valve and a 1/4 in. pressure line must be attached to the 1/4 in. pressure port on the side of the actuator. The pressure operated stackable actuator is spring loaded and does not have to be reset after use. The actuator is constructed of brass.

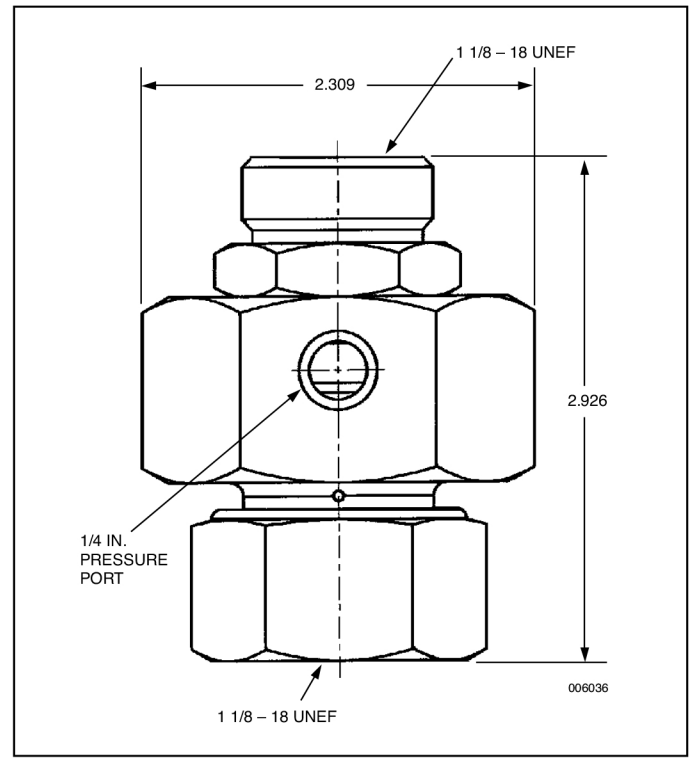

Distributed by SIRINA
An authorized ANSUL
Distributor

ANSUL and INERGEN are trademarks of Ansul Incorporated or its affiliates.

Booster Actuator

Description

The Booster Actuator, Part No. 428949, is used when electric actuation is required on the 1 in. selector valve, 2 in. selector valve, or the CV-98 cylinder valve. The actuator mounts directly to the component and then a HF electric actuator mounts to the top of the booster actuator.

The Booster Actuator requires resetting after actuation. A Reset Tool, Part No. 429847, is available for this use.

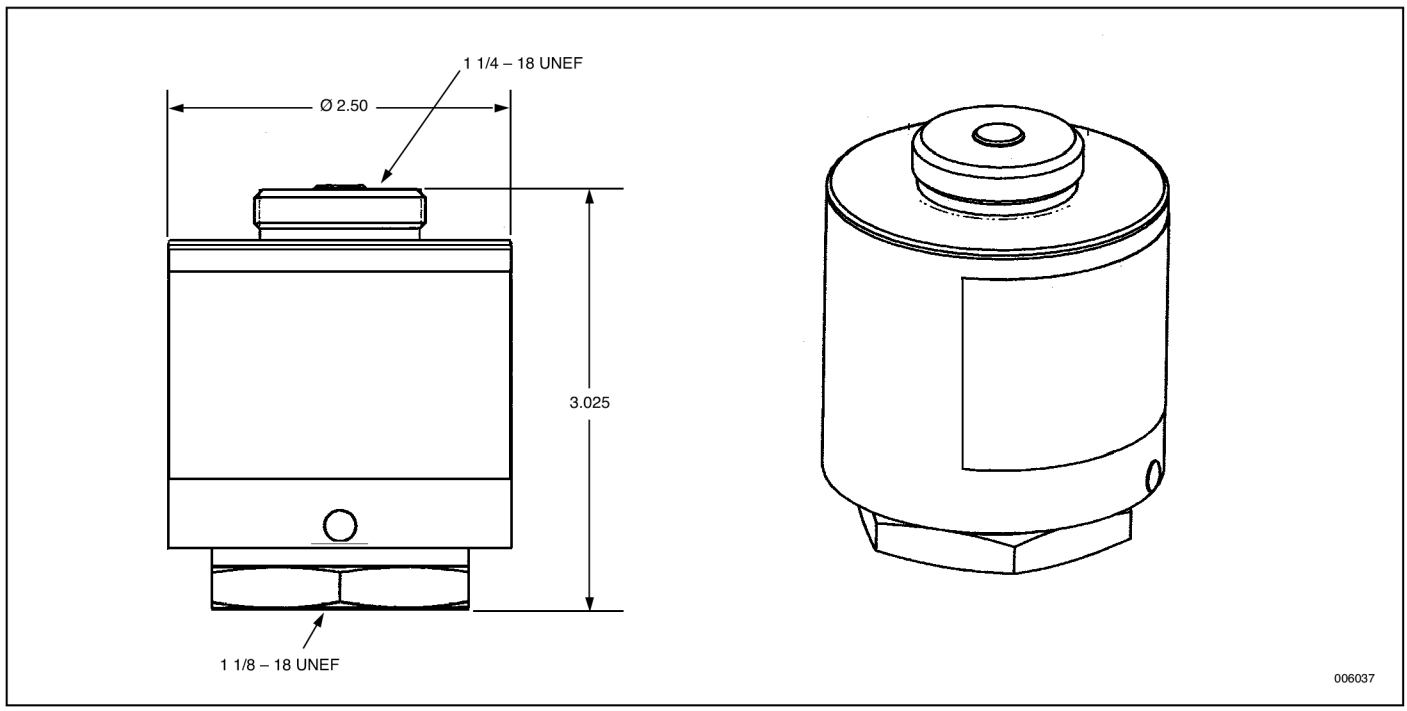

Distributed by SIRINA
An authorized ANSUL
Distributor

ANSUL and INERGEN are trademarks of Ansul Incorporated or its affiliates.

HF Electric Actuator

Description

Electrical actuation is accomplished by an HF electric Actuator, Part No. 73327, interfaced through an AUTOPULSE® Control System. This actuator can be used in hazardous, indoor environments where the ambient temperature range is between 0 °F to 130 °F (–18 °C to 54 °C). The HF electric actuator meets the requirements of N.E.C. Class I, Div. 1, Groups B, C, D and Class II, Div. 1, Groups E, F, G. A maximum of two HF electric actuators can be used on a single AUTOPULSE release circuit. When utilizing only one HF electric actuator, an in-line resistor, Part No. 73606, is required in the supervised release circuit.

In auxiliary or override applications, a manual-local override valve actuator or a manual cable pull actuator can be installed on top of the HF electric actuator by removing the safety cap.

An arming tool, Part No. 75433, is required to reset the actuator after operation. The actuator contains a standard 1/2 in. threaded female straight connector for electrical conduit hookup.

Technical Information

Nominal Voltage: . . . . . 12 VDC @ 0.57 amps

Rated Voltage:
- Minimum: . . . . . 12.0 VDC
- Maximum: . . . . . 14.0 VDC

Thread Size/Type: . . . . . 1/2 in. straight female for electrical conduit hookup

Material:
- Body: . . . . . Brass
- Plunger: . . . . . Stainless Steel

Listings and Approvals

UL E91021
ULC 1165
FM 2T8A9.AF

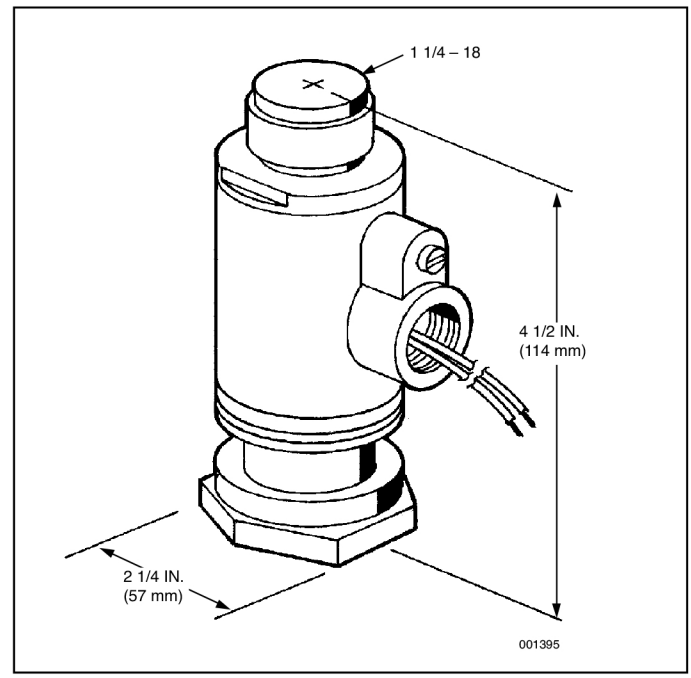

Distributed by SIRINA
An authorized ANSUL
Distributor

ANSUL and INERGEN are trademarks of Ansul Incorporated or its affiliates.

Booster Actuator/Selector Valve Adaptor

Description

The Booster Actuator/Selector Valve Adaptor, Part No. 430832, is used to adapt the booster actuator to the 3 and 4 in. selector valves (Part Nos. 857433 and 857445). The actuator/adaptor is mounted to the selector valve and the booster (Part No. 428949) is threaded to the top of the adaptor.

By adapting the booster actuator to the 3 and 4 in. selector valves, the valves can then be actuated by utilizing the electric HF actuator.

Shipping Assembly Part No.	Description
430832	Booster Actuator/ Selector Valve Adaptor

Component	Material	Approvals
Adaptor	Brass	FM Approved UL Listed (EX-4510)

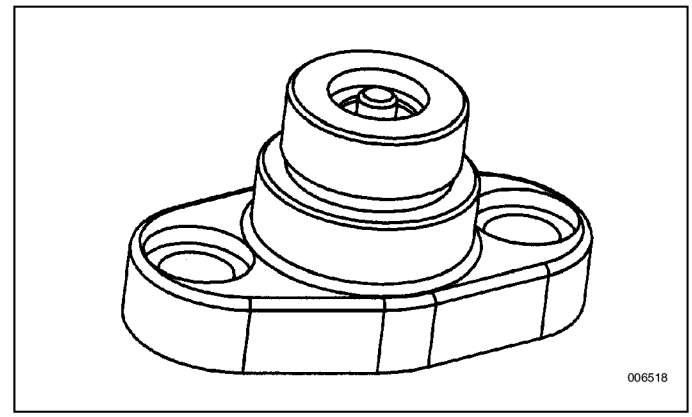

NOTE: This actuator/adaptor can also be used to retrofit older model 1/2 in. through 2 1/2 in. selector valves (Part Nos. 857428, 857429, 857430, 857431, 857432, and 857433) when used in conjunction with the booster actuator (Part No. 428949) and the HF actuator (Part No. 73327).

Distributed by SIRINA
An authorized ANSUL
Distributor

ANSUL and INERGEN are trademarks of Ansul Incorporated or its affiliates.

Lever Release Actuator

Description

The manual lever release actuator provides a manual means of actuating cylinder valves and selector valves. This can be accomplished by direct manual actuation of its pull lever or cable actuation when used in conjunction with a remote manual pull station. When used with a remote manual pull station, the pull station must contain the components necessary to meet the actuator lever traveling requirements of 7 in. (178 mm).

The actuator is shipped with ring pin and chain attached. If the ring pin is not required, it must be removed. Failure to remove the ring pin/chain assembly will prevent system actuation if a remote cable pull actuation system is employed and the ring pin is accidentally installed in the actuator.

Four actuators are available. Each is designed for a specific component.

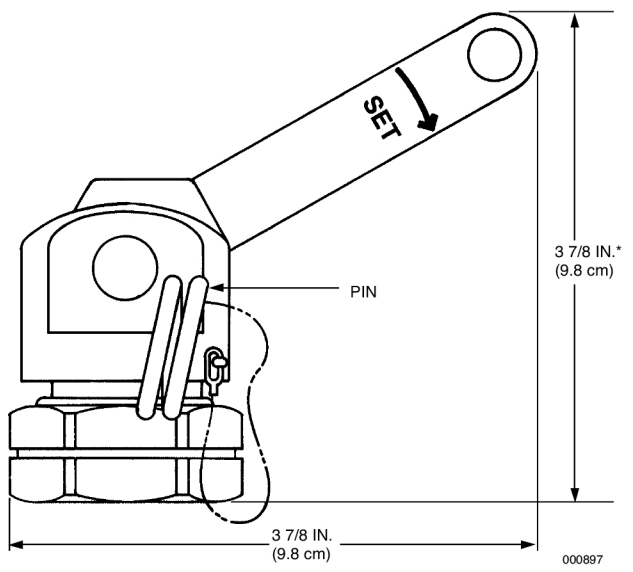

DEPTH: 3 7/8 IN. (7.6 cm)

* Add 1 9/16 in. (3.9 cm) to height when lever is in the straight up position.

Component	Material	Approvals
All Manual Cable-pull Actuators	Brass with Stainless Steel Pin	FM Approved UL Listed (EX-4510)

Shipping Assembly Part No.	Description
842484	Lever Release (1 1/4-18 mounting thread) – Mounts directly to pressure actuator on 2 1/2 in., 3 in. and 4 in. selector valves.
423309	Lever Release (1 1/8-18 mounting thread) – Mounts directly to a CV-98 electric actuator. Mounts directly to a CV-98 cylinder valve.
70846	Lever Release (1 1/4-18 mounting thread) – Mounts directly to an HF electric actuator.
427207	Lever Release (1 1/8-18 mounting thread) – Mounts directly to the 1 in. and 2 in. selector valves. Mounts directly to pressure operated stackable actuator for 1 in. and 2 in. selector valves. Actuator has the handle painted red.

ANSUL and INERGEN are trademarks of Ansul Incorporated or its affiliates.

 ©2006 Ansul Incorporated

Manual Pull Box

Description

The pull box on an INERGEN® system is used to provide mechanical release of the system from a manually operated remote station. Two types of pull boxes are available. The latched door type has a solid cast brass door which must be opened to reach the pull handle. The second type has a break glass window and a spring mounted handle which rotates forward for use when the glass is broken. A 3/8 in. female NPT opening is provided at the back of each enclosure for connection of the cable housing. Both types are painted red.

A pulley elbow may be attached directly to the back of the pull box, if necessary, to provide immediate changes in pull cable direction. With this option, the pull box can be extended an additional 3 1/2 in. (8.9 cm) from the mounting surface by using support legs attached to the back of the pull box (one set for latched door type, two sets for break-glass type).

Component	Material	Approvals
▸ Latch door pull box	Brass	FM Approved UL Listed (EX-4510)
▸ Break glass window pull box	Brass	FM Approved UL Listed (EX-4510)

Shipping Assembly Part No.	Description
845062	Latch door type pull box
841527	Break-glass window pull box
841542	Support legs

Manual Pull Box Latched Door Type

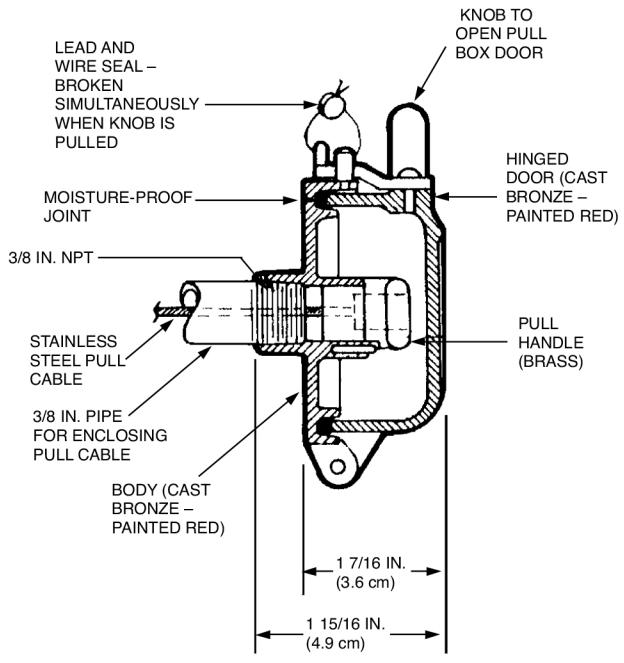

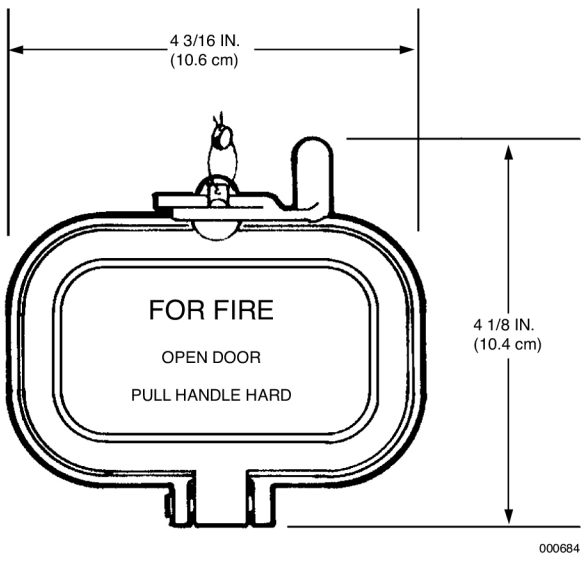

Manual Pull Box Break Glass Type “A”

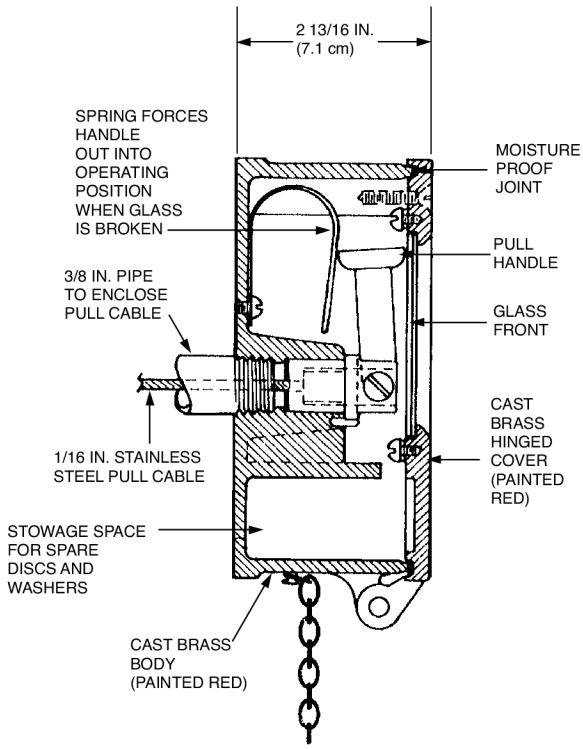

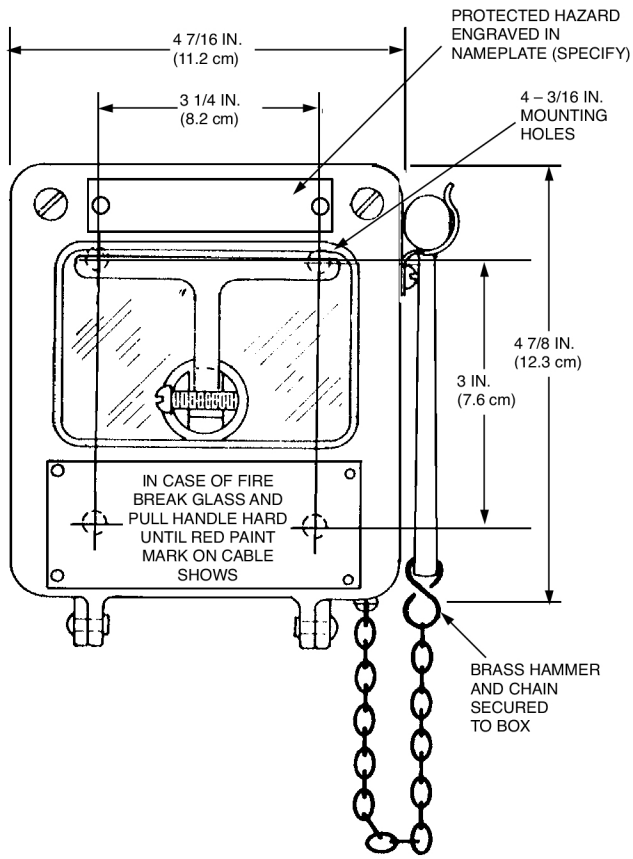

Distributed by SIRINA
An authorized ANSUL
Distributor

ANSUL and INERGEN are trademarks of Ansul Incorporated or its affiliates.

Cable with Swaged End Fitting

Description

The 1/16 in. diameter cable is used to attach remote manual pull boxes to cylinder valves, pull equalizers and control boxes. The cable is constructed of stranded, stainless steel wire. The cable is available in lengths of 50, 100, and 150, (15.2, 30.5, and 45.7m). The cable assemblies include a brass swaged end fitting for attaching to the remote pull box.

Component	Material	Approvals
Cable Assembly	Cable: Stainless Steel Swaged Fitting: Brass	FM Approved UL Listed (EX-4510)

Shipping Assembly Part No.	Description
842104	50 ft. (15.2 m) 1/16 in. (.16 cm) cable with swaged end fitting
842109	100 ft. (30.5 m) 1/16 in. (.16 cm) cable with swaged end fitting
842113	150 ft. (45.7 m) 1/16 in. (.16 cm) cable with swaged end fitting

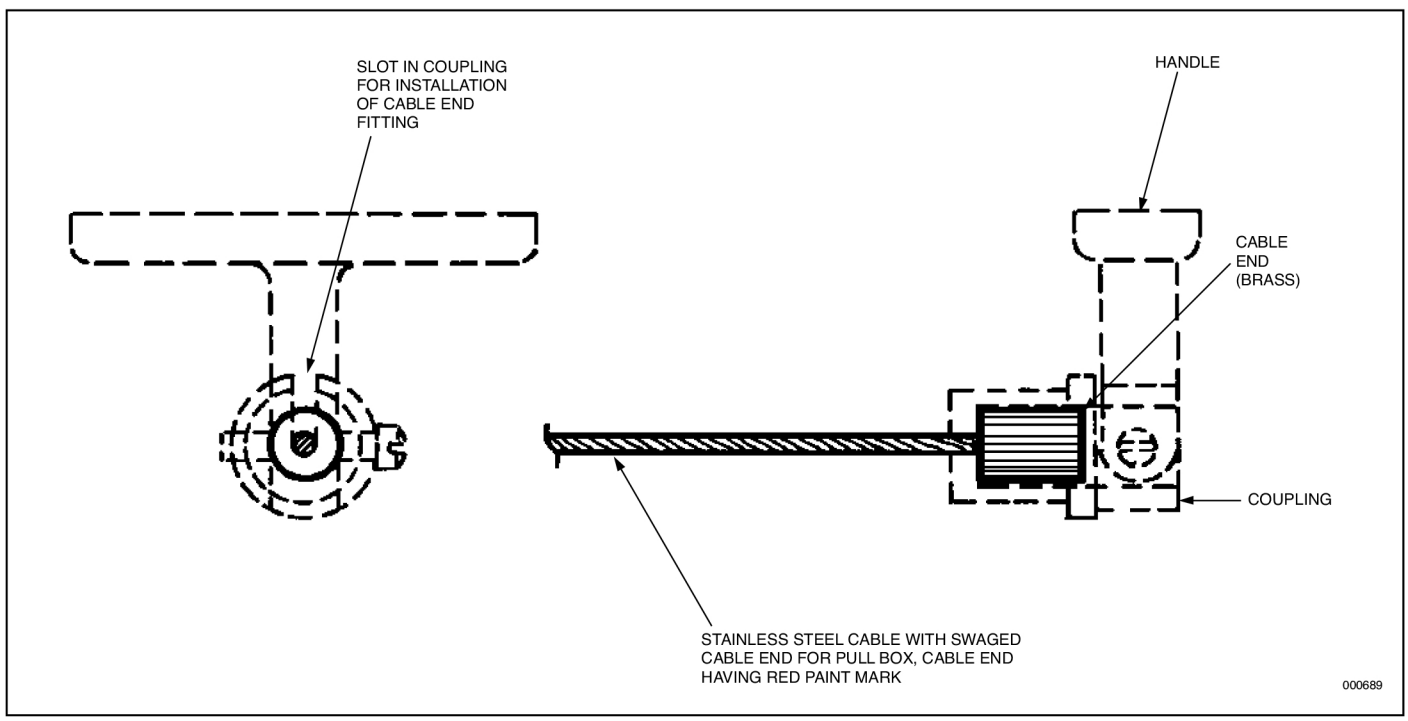

NOTE: The strength of the end fitting exceeds the breaking point of the cable.

Distributed by SIRINA
An authorized ANSUL Distributor

ANSUL and INERGEN are trademarks of Ansul Incorporated or its affiliates.

Corner Pulley

Description

The corner pulley is required on an INERGEN® system whenever a mechanical release pull cable run involves a change in direction. Corner pulleys are installed as part of the cable housing (pipe or conduit) and provide 90° direction changes with minimal force loss and no induced kinking.

Two types of corner pulleys are available. One is made of die cast aluminum, has a ball bearing roller, and uses compression fittings for 1/2 in. EMT connections. The second type is made of forged brass and is threaded for 3/8 in. NPT pipe. Two styles of forged brass corner pulleys are available: one with a brass wheel and one with a nylon wheel. Both styles of brass pulleys are watertight. The brass wheel corner pulley is designed for location inside or outside the protected space. The nylon wheel corner pulley is designed for location only outside the hazard space. Thread adaptors are available to simplify the installation.

Component	Material	Thread Size/Type	Approvals
▸ Corner Pulley	Body: Aluminum Roller: Stainless Steel	1/2 in. EMT	FM Approved UL Listed (EX-4510)
▸ Corner Pulley	Body: Brass Wheel: Brass	3/8 in. NPT	FM Approved UL Listed (EX-4510)
▸ Corner Pulley	Body: Brass Wheel: Nylon	3/8 in. NPT	FM Approved UL Listed (EX-4510)

Shipping Assembly Part No.	Description
423250	Aluminum corner pulley
842678	Brass corner pulley (nylon wheel)
845515	Brass corner pulley (brass wheel)
840696	Thread adaptor – (brass pulley only)

Forged Brass Watertight Corner Pulley, Sheave Type, Part No. 842678 and 845515

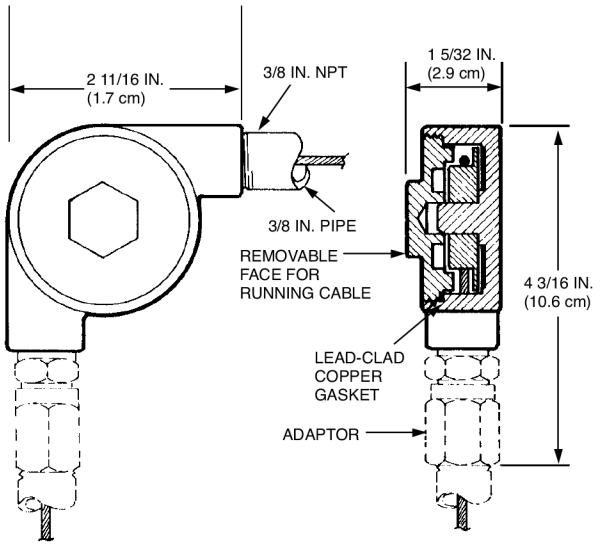

Corner Pulley For 1/2" EMT Aluminum, Part No. 423250

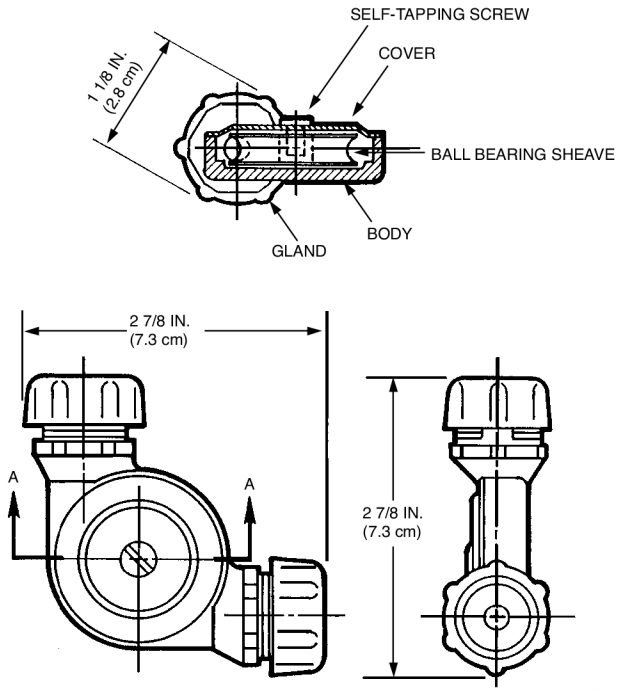

Distributed by SIRINA
An authorized ANSUL
Distributor

ANSUL and INERGEN are trademarks of Ansul Incorporated or its affiliates.

Inergen® Clean Agent Systems

Dual/Triple Control Boxes

Description

The dual/triple control boxes allow manual actuation of a cylinder valve from two or three remote pull stations. Two styles of control boxes are available. Part No. 842784 is 13 3/4 in. (34.9 cm) and Part No. 843166 is 20 3/4 in. (52.7 cm) long. Both styles can be used for cylinder valve actuation. The inlet and outlet connections are threaded for 3/8 in. pipe. If 1/2 in. EMT conduit connections are required, adaptor Part No. 845780 is available.

Shipping Assembly Part No.	Description
842784	Dual/triple control box (short)
843166	Dual/triple control box (long)

Component	Material	Thread Size/Type	Approvals
▸ Control Box (short)	Steel	3/8 in. NPT Female	FM Approved UL Listed (EX-4510)
▸ Control Box (long)	Steel	3/8 in. NPT Female	FM Approved UL Listed (EX-4510)

Part No. 842784

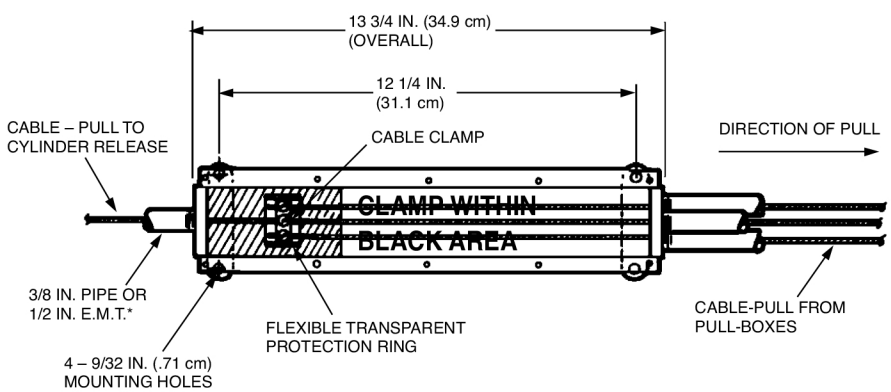

Junction Box (Shown Without Cover)

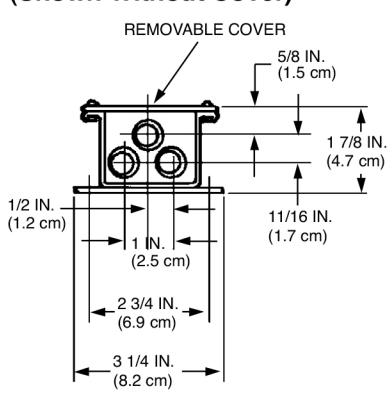

End View

000685

* Adaptors furnished for use with 1/2 in. EMT – Part No. 845780

Part No. 843166

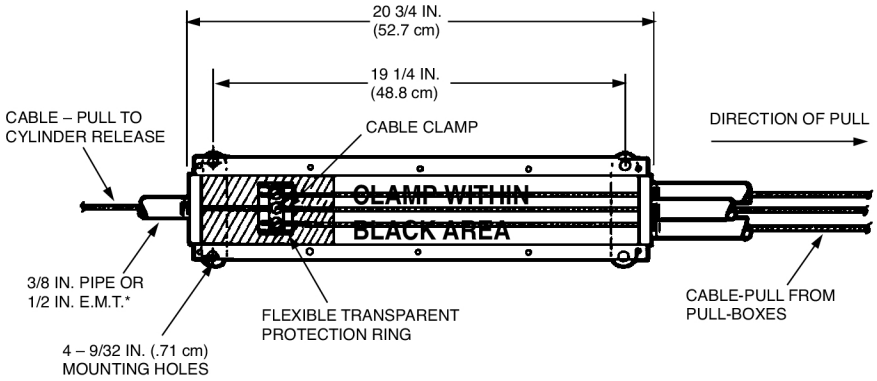

Junction Box
(Shown Without Cover)

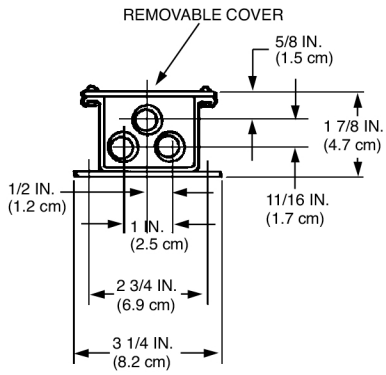

End View

000685

* Adaptors furnished for use with 1/2 in. EMT – Part No. 845780

Distributed by SIRINA
An authorized ANSUL
Distributor

ANSUL and INERGEN are trademarks of Ansul Incorporated or its affiliates.

Remote Cable Pull Equalizer

Description

The remote cable pull equalizer is used in systems where manual actuation of the cylinder valve and operation of a selector valve must be accomplished at the same time. The pull equalizer is mounted in the remote pull station cable line. By pulling the remote pull box, the cable attached to the pull equalizer will pull the internal cable clamp in the pull equalizer which in turn will pull the cables attached to the cylinder valve and selector valve, causing them to operate. Two styles of pull equalizers are available. Part No. 842791 is 13 3/4 in. (34.9 cm) long and Part No. 843168 is 20 3/4 in. (52.7 cm). Only the longest equalizer, Part No. 843168, can be used for valves utilizing sectors. The inlet and outlet connections are threaded for 3/8 in. pipe. If 1/2 in. EMT conduit connections are required, adaptor Part No. 845780 is available.

Shipping Assembly Part No.	Description
842791	Remote cable pull equalizer (short)
843168	Remote cable pull equalizer (long)

Component	Material	Thread Size/Type	Approvals
▸ Pull Equalizer (short)	Steel	3/8 in. NPT Female	FM Approved UL Listed (EX-4510)
▸ Pull Equalizer (long)	Steel	3/8 in. NPT Female	FM Approved UL Listed (EX-4510)

Part No. 842791

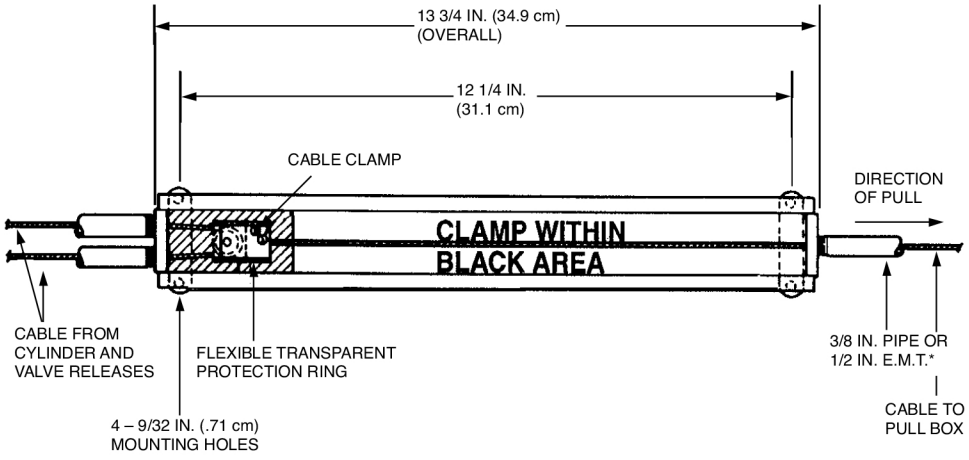

Equalizer Box
(Shown Without Cover)

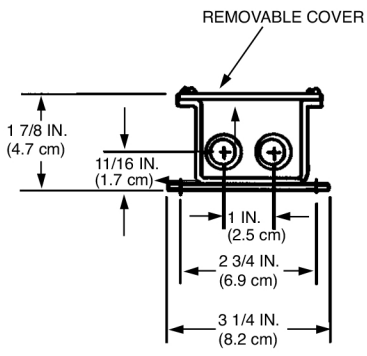

End View

* Adaptors furnished for use with 1/2 in. E.M.T. – Part No. 845780

Part No. 843168

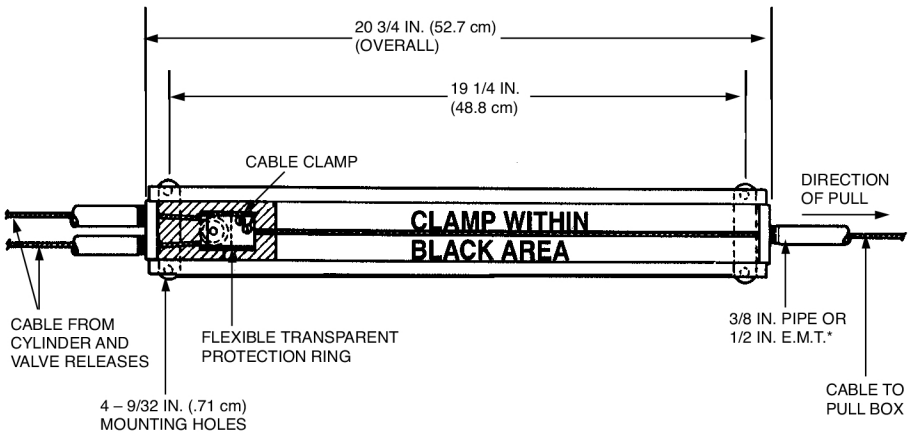

Equalizer Box
(Shown Without Cover)

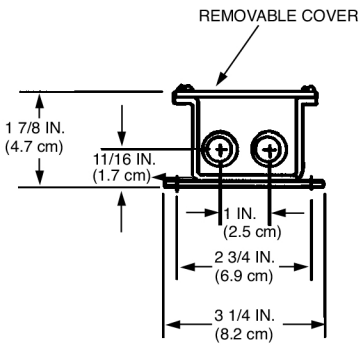

End View

* Adaptors furnished for use with 1/2 in. E.M.T. – Part No. 845780

Distributed by SIRINA
An authorized ANSUL
Distributor

ANSUL and INERGEN are trademarks of Ansul Incorporated or its affiliates.

 ©2006 Ansul Incorporated

Pressure Bleeder Plug – 1/4 in.

Description

The pressure bleeder plug must be used to relieve the pressure in closed actuation lines. The plug relieves the pressure through a small orifice. This slow relief of pressure does not affect the function of the actuation line.

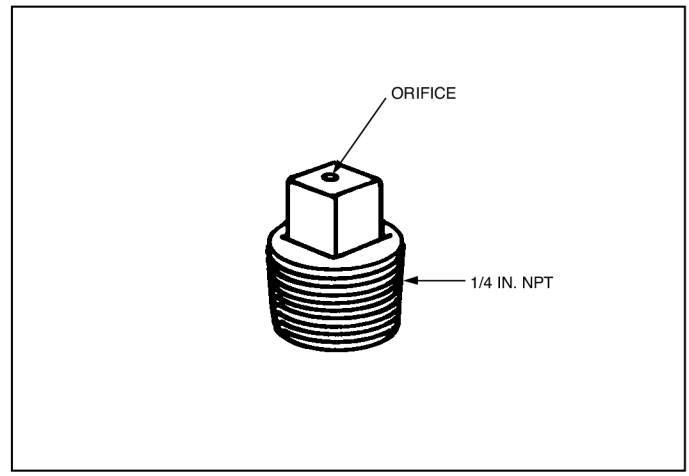

Shipping Assembly Part No.	Description
842175	Pressure Bleeder Plug

Component	Material	Thread Size/Type	Approvals
Bleeder Plug	Brass	1/4 in. NPT Male	FM Approved UL Listed (EX-4510)

Distributed by SIRINA
An authorized ANSUL
Distributor

ANSUL and INERGEN are trademarks of Ansul Incorporated or its affiliates.

Flexible Discharge Bend

Description

The valve Flexible Discharge Bend (Part No. 427082) is a 5/8 in. (1.59 cm) I.D. extra-heavy flexible hose which connects the valve discharge outlet to the fixed piping or header manifold. The discharge bend has a special female thread for connecting to the valve outlet and a male 1/2 in. NPT thread for connecting to the fixed piping or manifold. The discharge bend will withstand a pressure of 9000 psi (621 bar). Its flexible connection allows for easy alignment of multiple cylinder banks to fixed piping. Each bend has a built-in check valve that prevents loss of agent should the system discharge while any cylinder is removed.

The equivalent length of this hose is equal to 18 ft. (5.5 m) of 1/2 in. Sch. 40 pipe.

Shipping Assembly Part No.	Description
427082	Flexible discharge bend
842430	Washer

Component	Material	Thread Size/Type		Approvals
		Valve End	Manifold End	
► 5/8 in. Flexible Discharge Bend	SAE 100 R2 Type AT	Special to mate mate with CV90 and CV-98 Valve	1/2 in. NPT Male	FM Approved UL Listed (EX-4510)

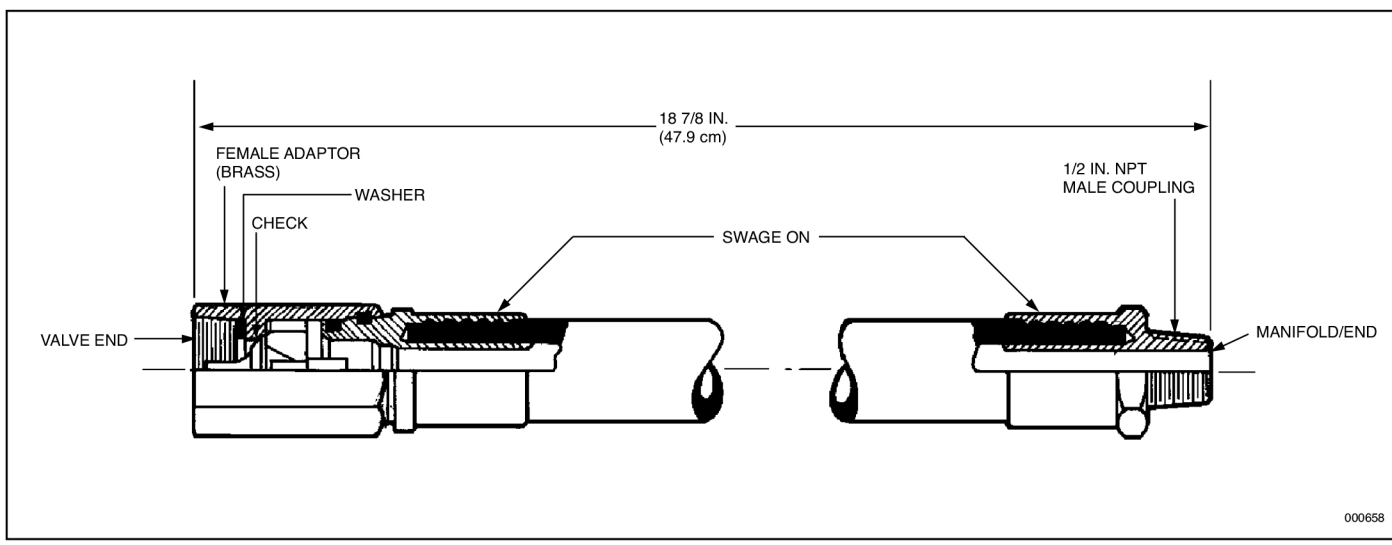

ANSUL and INERGEN are trademarks of Ansul Incorporated or its affiliates.

 ©2006 Ansul Incorporated

Inergen® Clean Agent Systems

Check Valves

Description

Check valves are used in main/reserve and selector valve systems. On main/reserve systems, the check valve prevents pressurization of the reserve system manifold by blocking the flow of INERGEN® agent from the main system to the reserve system. The check valve allows gas flow from the reserve (if actuated) to pass through into the distribution piping. On selector valve systems, check valves separate the actuation of smaller system(s) from the largest ones.

The check valves are available in sizes from 1/2 in. through 3 in.

Shipping Assembly Part No.	Description
840860	1/2 in. check valve
840852	3/4 in. check valve
841470	1 in. check valve
841549	1 1/4 in. check valve
841463	1 1/2 in. check valve
840649	2 in. check valve
840656	2 1/2 in. check valve
840665	3 in. check valve

Component	Material	Thread Size/Type	Body Type	Approvals	Equivalent Length (Sch. 80 Pipe)
Check Valve	Bronze	1/2-14 NPT Female	Threaded	FM Approved UL Listed (EX-4510)	12. 0 ft. (3.7 m)
Check Valve	Bronze	3/4-14 NPT Female	Threaded	FM Approved UL Listed (EX-4510)	24.0 ft. (7.3 m)
Check Valve	Bronze	1-11 1/2 NPT Female	Threaded	FM Approved UL Listed (EX-4510)	28.0 ft. (8.5 m)
Check Valve	Bronze	1 1/4 -11 1/2 NPT Female	Threaded	FM Approved UL Listed (EX-4510)	43.0 ft. (13.1 m)
Check Valve	Bronze	1 1/2-11 1/2 NPT Female	Threaded	FM Approved UL Listed (EX-4510)	51.0 ft. (15.5 m)
Check Valve	Bronze	2-11 1/2 NPT Female	Threaded	FM Approved UL Listed (EX-4510)	48.0 ft. (14.6 m)
Check Valve	Bronze	2 1/2-8 NPT Female	Threaded	FM Approved UL Listed (EX-4510)	60.0 ft. (18.3 m)
Check Valve	Bronze Body Steel Flange	3-8 NPT Female	Threaded Flange	FM Approved UL Listed (EX-4510)	154.0 ft. (46.9 m)

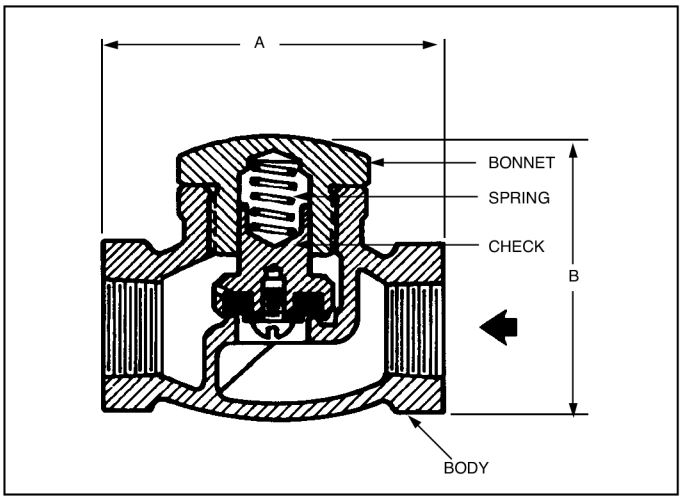

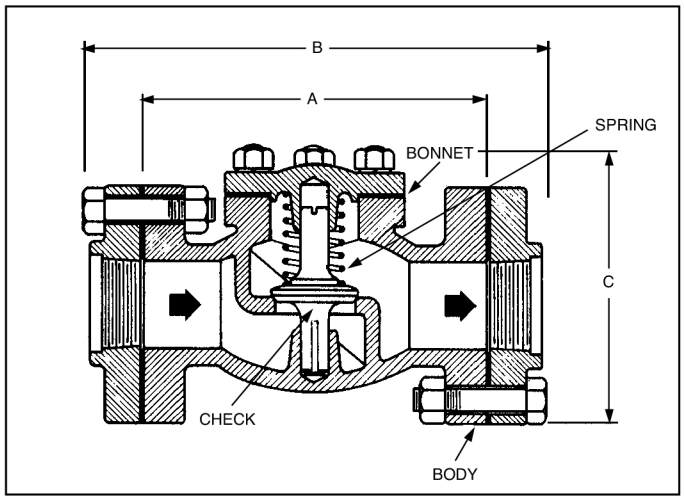

Check Valve – Threaded				
Valve Size	Dimension A in.	(cm)	Dimension B in.	(cm)
1/2 in.	3	(7.6)	2 5/8	(6.6)
3/4 in.	3 5/8	(9.2)	3 1/8	(7.9)
1 in.	4 1/8	(10.4)	3 3/4	(9.5)
1 1/4 in.	5	(12.7)	4 1/2	(11.4)
1 1/2 in.	5 1/2	(13.9)	5 1/8	(13)
2 in.	6 1/2	(16.5)	5 3/4	(14.6)
2 1/2 in.	8	(20.3)	6 3/4	(17.1)

Check Valve – Threaded Flange						
Valve Size	Dimension A in.	(cm)	Dimension B in.	(cm)	Dimension C in.	(cm)
3 in.	11 1/2	(29.2)	15	(38.1)	9 1/2	(24.1)

Distributed by SIRINA
An authorized ANSUL
Distributor

ANSUL and INERGEN are trademarks of Ansul Incorporated or its affiliates.

 ©2006 Ansul Incorporated

Header Vent Plug

Description

The header vent plug is used to release low pressure build-up that may occur in a closed system utilizing selector valves or check valves. The header vent plug should also be installed on the cylinder sides of the check valves on both main and reserve systems to relieve any pressure that may leak past the check valve and accidentally actuate the reserve system while the main system is discharging.

Shipping Assembly Part No.	Description
840309	Header vent plug

Component	Material	Thread Size/Type	Approvals
▸ Vent Plug	Body: Brass Spring: Bronze Seal: Neoprene	1/2 in. NPT Male	FM Approved UL Listed (EX-4510)

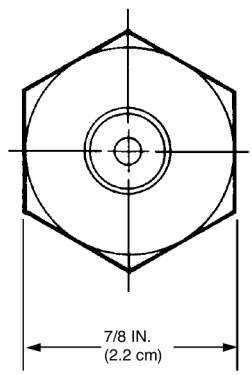

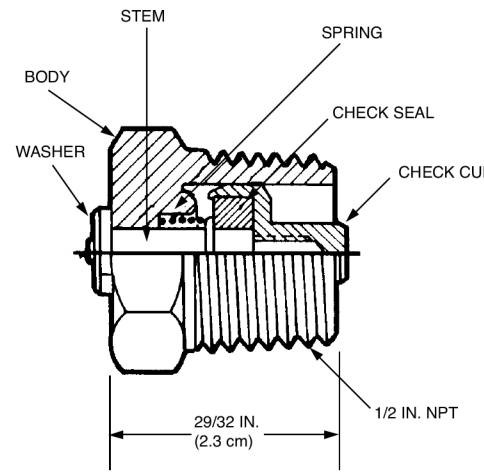

000707

ANSUL and INERGEN are trademarks of Ansul Incorporated or its affiliates.

 ©2006 Ansul Incorporated

Stainless Steel Actuation Hose

Description

The Stainless Steel Actuation Hose is used to connect the actuation line flared tees between each agent tank. The hose has the same thread, 7/16-20, as the flared tees. The actuation hose allows flexibility between the rigid actuation piping and the tank valve.

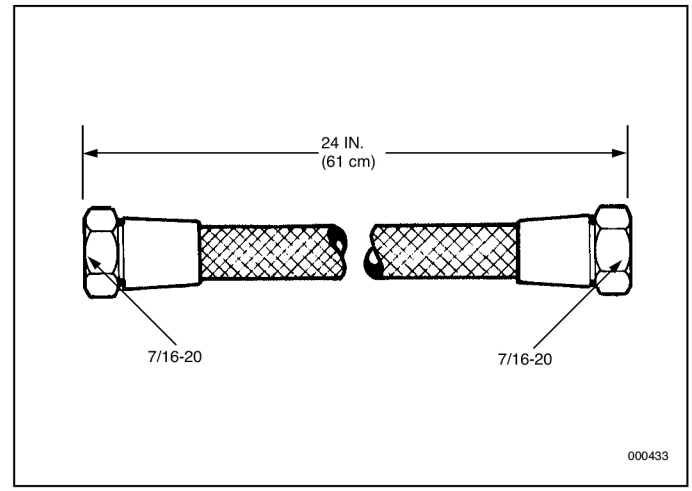

Shipping Assembly Part No.	Description
831809	16 in. (40.6 cm) Stainless Steel Hose
832335	20 in. (50.8 cm) Stainless Steel Hose
832336	24 in. (60.9 cm) Stainless Steel Hose

Component	Material	Thread Size	Approvals
Stainless Steel Hose	Stainless Steel	Female 7/16-20 (Both ends)	UL Listed (EX-4510) FM Approved

Additional actuation fittings are available:

Part No.	Description
831810	Male Elbow (7/16-20 x 1/4 in. NPT)
831811	Male Tee (7/16-20 x 7/16-20 x 1/4 in. NPT)
832338	Male Straight Connector (7/16-20 x 1/4 in. NPT)

ANSUL and INERGEN are trademarks of Ansul Incorporated or its affiliates.

 ©2006 Ansul Incorporated

Pressure Reducer/Union

Description

The pressure reducer/union is required to restrict the flow of INERGEN® agent thus reducing the agent pressure down stream of the union. The 3000 psi (206.9 bar) NSCWP union contains a stainless steel orifice plate which is drilled to the specific size hole required based on the flow calculation.* The orifice plate provides readily visible orifice identification. The orifice union is available in six sizes: 1/2 in., 3/4 in., 1 in., 1 1/4 in., 1 1/2 in., and 2 in. NPT.

All pressure reducer/unions must be installed in the piping with the orifice identification tab on the pressure inlet side of the system. The 1 1/4 in., 1 1/2 in. and 2 in. orifice unions must be installed per the direction of the flow arrow stamped on the body.

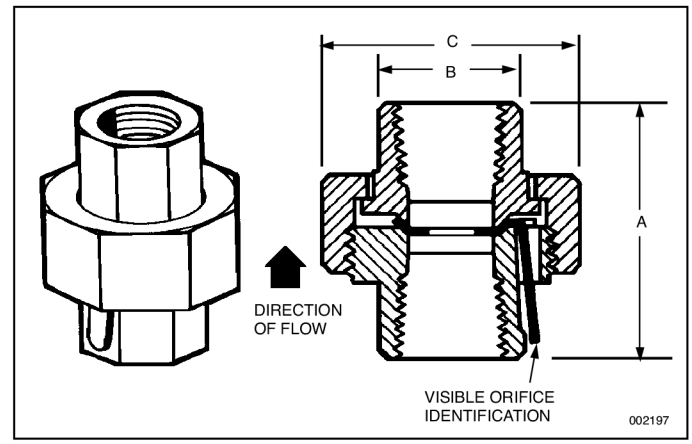

Shipping Assembly Part No.	Description	A	B	C
416677	1/2 in. NPT pressure reducer/union	2.06 in. (5.2 cm)	1.18 in. (2.9 cm)	1.95 in. (4.9 cm)
416678	3/4 in. NPT pressure reducer/union	2.38 in. (6.1 cm)	1.50 in. (3.8 cm)	2.38 in. (6.1 cm)
416679	1 in. NPT pressure reducer/union	2.63 in. (6.7 cm)	1.78 in. (4.5 cm)	2.77 in. (7.0 cm)
416680	1 1/4 in. NPT pressure reducer/union	2.94 in. (7.5 cm)	2.04 in. (5.2 cm)	3.31 in. (8.4 cm)
416681	1 1/2 in. NPT pressure reducer/union	3.31 in. (8.4 cm)	2.31 in. (5.9 cm)	3.70 in. (9.4 cm)
416682	2 in. NPT pressure reducer/union	3.56 in. (9.0 cm)	2.85 in. (7.2 cm)	4.39 in. (11.2 cm)

Component	Material	Thread Size	Approvals
Pressure Reducer/ Union	Body: Forged Steel Orifice Plate: Stainless Steel	1/2, 3/4, 1, 1 1/4, 1 1/2, 2 in. NPT	FM Approved UL Listed (EX-4510)

NOTE: Refer to “Nozzle/Pressure Reducer Range Chart” in Design Section for detailed orifice range information.

* Orifice diameter must be specified when placing order.

ANSUL and INERGEN are trademarks of Ansul Incorporated or its affiliates.

Pressure Reducer/Nipple

Description

The pressure reducer/nipple is required to restrict the flow of INERGEN® agent thus reducing the agent pressure downstream of the nipple. The nipple contains an orifice which is drilled to the specific size hole required based on the flow calculation.* The pressure reducer/nipple part number and orifice size are stamped on the body hex. The orifice nipple is available in two sizes: 2 1/2 in., and 3 in. NPT.

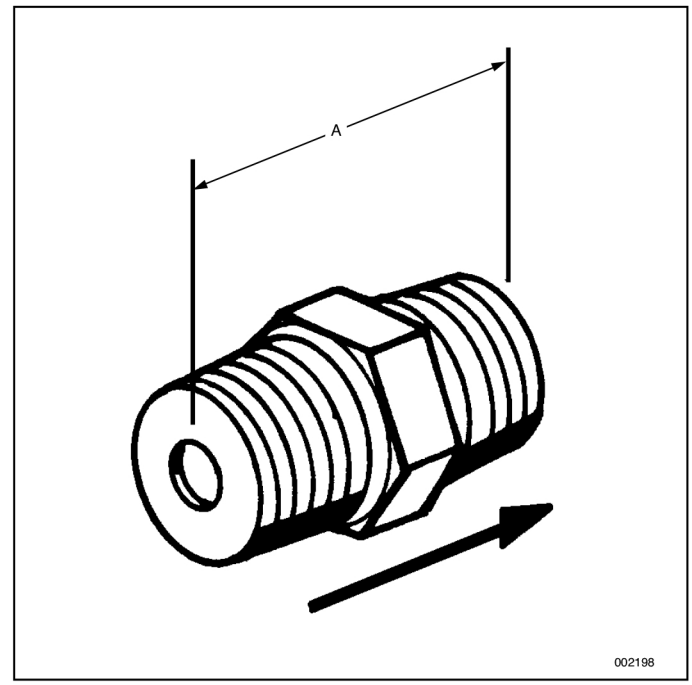

Shipping Assembly Part No.	Description
417057	2 1/2 in. NPT pressure reducer/nipple
417058	3 in. NPT pressure reducer/nipple

Nipple Size	Hex Size	"A" Dim.
2 1/2 in.	3 in.	4 3/8 in.
3 in.	3 1/2 in.	4 1/2 in.

Component	Material	Thread Size	Approvals
Pressure Reducer/ Nipple	Body: Brass	2 1/2 in., 3 in. NPT	UL Listed (EX-4510) FM Approved

NOTE: Refer to "Nozzle/Pressure Reducer Range Chart" in Design Section for detailed orifice range information.

* Orifice diameter must be specified when placing order.

ANSUL and INERGEN are trademarks of Ansul Incorporated or its affiliates.

Inergen® clean Agent Systems

Flanged Pressure Reducer

Description

The flanged pressure reducer assembly is required to restrict the flow of INERGEN® agent thus reducing the agent pressure down stream of the pressure reducer. The flanged pressure reducer assembly contains a stainless steel orifice plate which is drilled to the specific size hole required based on the flow calculation.* The orifice plate provides readily visible orifice identification. The flanged pressure reducer assembly is available in three sizes; 2 1/2, 3, and 4 in. Each size is available in threaded, slip-on, and weld neck flange.

All orifice plates must be installed in the piping system with the orifice identification information on the tab facing the pressure inlet side of the system.

Component	Material	Approvals
Flange	Forged Steel	UL Listed (EX-4510)
Flange Gasket	Stainless Steel	
Orifice Plate	Stainless Steel	
Bolts	Plated Steel, Grade 5	

Shipping Assembly Part No.	Description	A	B	C	D	E
426823	2 1/2 in Threaded	4.23 in. (10.7 cm)	7.50 in. (19.1 cm)	9.70 in. (24.6 cm)	5.88 in. (14.9 cm)	.88 in. (8) (2.2 cm)
426824	3 in. Threaded	4.10 in. (10.4 cm)	8.25 in. (20.9 cm)	10.46 in. (26.6 cm)	6.63 in. (16.8 cm)	.88 in. (8) (2.2 cm)
426825	4 in. Threaded	4.73 in. (12.0 cm)	10.75 in. (27.3 cm)	12.59 in. (31.9 cm)	8.50 in. (21.6 cm)	1.00 in.(8) (2.5 cm)
426847	2 1/2 in. Slip-on	4.24 in. (10.8 cm)	7.50 in. (19.1 cm)	9.70 in. (24.6 cm)	5.88 in. (14.9 cm)	.88 in. (8) (2.2 cm)
426848	3 in. Slip-on	4.60 in. (11.7 cm)	8.25 in. (20.9 cm)	10.46 in. (26.6 cm)	6.63 in. (16.8 cm)	.88 in. (8) (2.2 cm)
426849	4 in. Slip-on	5.24 in. (13.3 cm)	10.75 in. (27.3 cm)	12.59 in. (31.9 cm)	8.50 in. (21.6 cm)	1.00 in. (8) (2.5 cm)
426853	2 1/2 in. Weld Neck	7.23 in. (18.4 cm)	7.50 in. (19.1 cm)	9.70 in. (24.6 cm)	5.88 in. (14.9 cm)	.88 in. (8) (2.2 cm)
426854	3 in. Weld Neck	7.48 in. (18.9 cm)	8.25 in. (20.9 cm)	10.46 in. (26.6 cm)	6.63 in. (16.8 cm)	.88 in. (8) (2.2 cm)
426855	4 in. Weld Neck	8.98 in. (22.8 cm)	10.75 in. (27.3 cm)	12.59 in. (31.9 cm)	8.50 in. (21.6 cm)	1.00 in. (8) (2.5 cm)

NOTE: Refer to “Nozzle/Pressure Reducer Range Chart” in Design Section for detailed orifice range information.

* Orifice diameter must be specified when placing order.

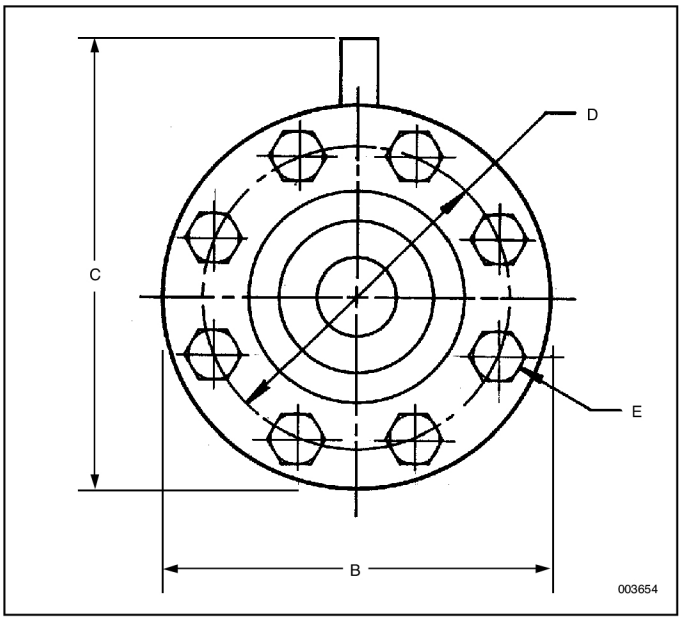

Weld Neck

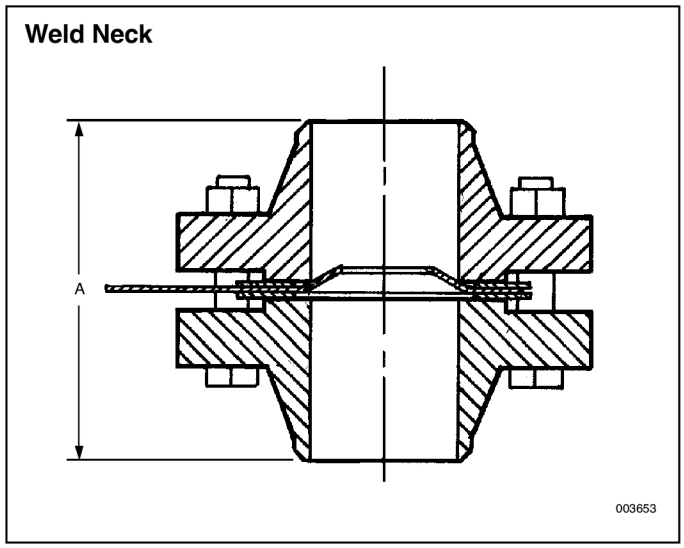

Threaded

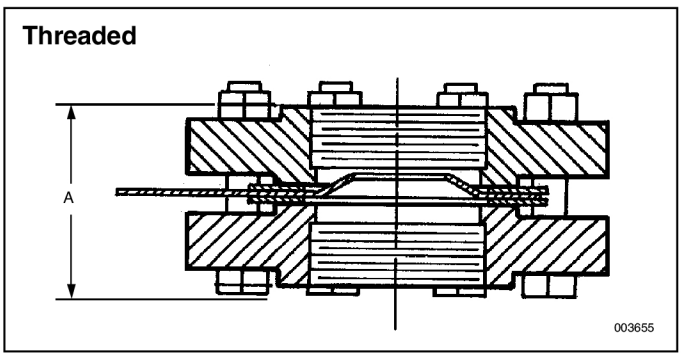

Slip-On

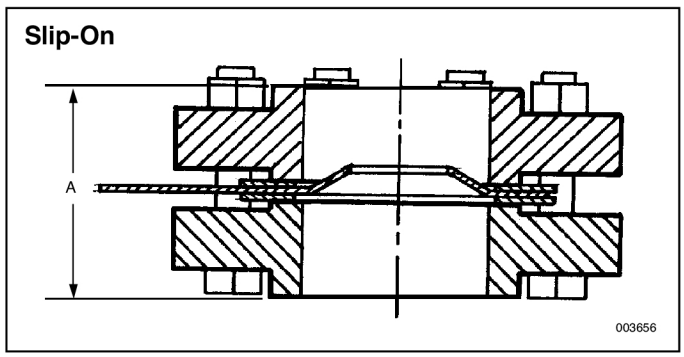

Distributed by SIRINA
An authorized ANSUL
Distributor

ANSUL and INERGEN are trademarks of Ansul Incorporated or its affiliates.

Orifice Plate

Description

Orifice plate shipping assemblies are available as replacement plates. Replacement plates may be required in situations where the piping and pressure reducer size can stay the same but because of some hazard change, the size of the orifice in the pressure reducer must change.

The orifice size must be specified when ordering the orifice plate.

NOTE: Replacement orifice plates for orifice nipples are not available as the plate is a permanent fixture of the part.

NOTE: Refer to “Nozzle/Pressure Reducer Range Chart” in Design Section for detailed orifice range information.

Part No.	Description
418095	1/2 in. Replacement Orifice Plate
418096	3/4 in. Replacement Orifice Plate
418097	1 in. Replacement Orifice Plate
418098	1 1/4 in. Replacement Orifice Plate
418099	1 1/2 in. Replacement Orifice Plate
418100	2 in. Replacement Orifice Plate
426984	2 1/2 in. Replacement Orifice Plate
426985	3 in. Replacement Orifice Plate
426986	4 in. Replacement Orifice Plate

ANSUL and INERGEN are trademarks of Ansul Incorporated or its affiliates.

 ©2001 Ansul Incorporated

Single Mating Flanges

Description

Single mating flanges are available for field assembly to the Ansul selector valves and the Ansul flanged pressure reducers. These single, flanged shipping assemblies are available in threaded, slip-on, and weld neck, in 2 1/2, 3, and 4 in. sizes. Each shipping assembly includes a flange, a stainless steel gasket, 8 bolts, and 8 nuts.

Shipping Assembly Part No.	Description
426856	2 1/2 in. Threaded Flange
426857	3 in. Threaded Flange
426858	4 in. Threaded Flange
426859	2 1/2 in. Slip on Flange
426860	3 in. Slip-on Flange
426861	4 in. Slip-on Flange
426862	2 1/2 in. Weld Neck
426863	3 in. Weld Neck
426864	4 in. Weld Neck

Component	Material	Approvals
Flange Flange Gasket Bolts/Nuts	Forged Steel Stainless Steel Plated Steel, Grade 5	UL Listed (EX-4510)

ANSUL and INERGEN are trademarks of Ansul Incorporated or its affiliates.

360° Discharge Nozzle

Description

Discharge nozzles are designed to direct the discharge of INERGEN® agent using the stored pressure from the cylinders. Ten sizes of nozzles are available. The system design specifies the orifice size to be used for proper flow rate and distribution pattern*. The nozzle selection depends on the hazard and location to be protected. Standard nozzles are constructed of brass.

NOTE: 2, 2 1/2, and 3 in. nozzles are not recommended in areas that are subject to damage by high velocity discharges, such as suspended ceiling tiles.

Shipping Assembly Part No.	Description
417908	1/4 in. NPT nozzle**
417723	3/8 in. NPT nozzle**
417362	1/2 in. NPT nozzle
417363	3/4 in. NPT nozzle
417364	1 in. NPT nozzle
417365	1 1/4 in. NPT nozzle
417366	1 1/2 in. NPT nozzle
426155	2 in. NPT nozzle
426156	2 1/2 in. NPT nozzle
426137	3 in. NPT nozzle

Component	Material	Thread Size	Approvals
▸ Nozzle	Body–Brass	1/4**, 3/8**, 1/2, 3/4, 1, 1 1/4, 1 1/2, 2, 2 1/2, 3 NPT	FM Approved UL Listed (EX-4510)

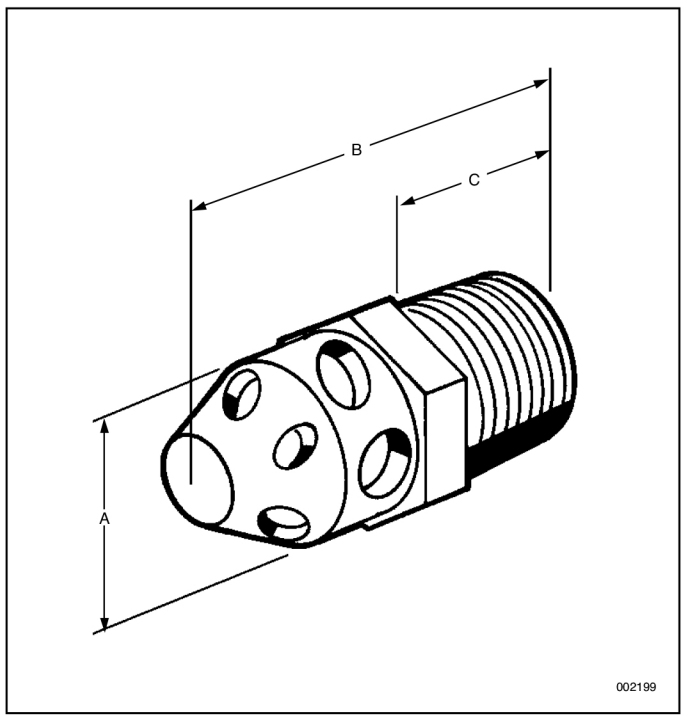

Size	A-In.	B-In.	C-In.	Hex
1/4 in.	5/8	1 9/16	21/32	5/8
3/8 in.	3/4	1 5/8	23/32	3/4
1/2 in.	15/16	1 31/32	27/32	15/16
3/4 in.	1 1/8	2 5/32	7/8	1 1/8
1 in.	1 13/32	2 9/16	1	1 7/16
1 1/4 in.	1 3/4	2 3/4	1 1/16	1 3/4
1 1/2 in.	2	2 31/32	1 1/16	2
2 in.	2 3/8	3	1	2 3/8
2 1/2 in.	3	3 1/2	1	3
3 in.	3 1/2	4 1/8	1 1/4	3 1/2

NOTE: Refer to “Nozzle/Pressure Reducer Range Chart” in Design Section for detailed orifice range information.

* Orifice diameter must be specified when ordering nozzle. Refer to Orifice Size Chart in Manual Appendix Section.

**UL/ULC listed only.

ANSUL and INERGEN are trademarks of Ansul Incorporated or its affiliates.

 ©2006 Ansul Incorporated

180° Discharge Nozzle

Description

Discharge nozzles are designed to direct the discharge of INERGEN® agent using the stored pressure from the cylinders. Ten sizes of nozzles are available. The system design specifies the orifice size to be used for proper flow rate and distribution pattern*. The nozzle selection depends on the hazard and location to be protected. The 180° nozzle is commonly used when nozzle placement is at the wall. Standard nozzles are constructed of brass.

An index mark is stamped on the bottom of the nozzle to indicate the aiming direction.

Component	Material	Thread Size
Nozzle	Body: Brass	1/4, 3/8, 1/2, 3/4, 1, 1 1/4, 1 1/2, 2, 2 1/2, 3 NPT

Shipping Assembly Part No.	Description
426138	1/4 in. NPT nozzle
426139	3/8 in. NPT nozzle
426140	1/2 in. NPT nozzle
426141	3/4 in. NPT nozzle
426142	1 in. NPT nozzle
426143	1 1/4 in. NPT nozzle
426157	1 1/2 in. NPT nozzle
426144	2 in. NPT nozzle
426145	2 1/2 in. NPT nozzle
426146	3 in. NPT nozzle

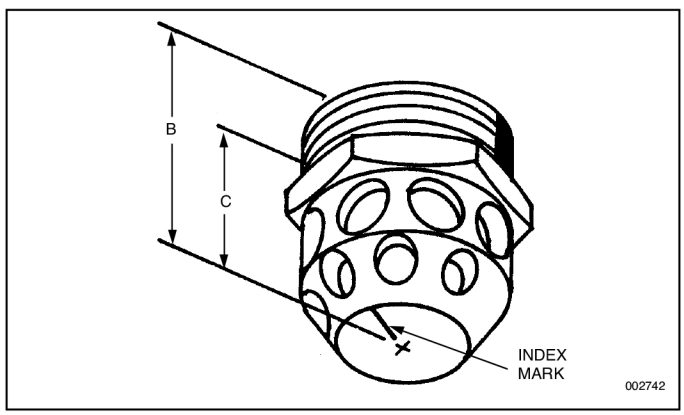

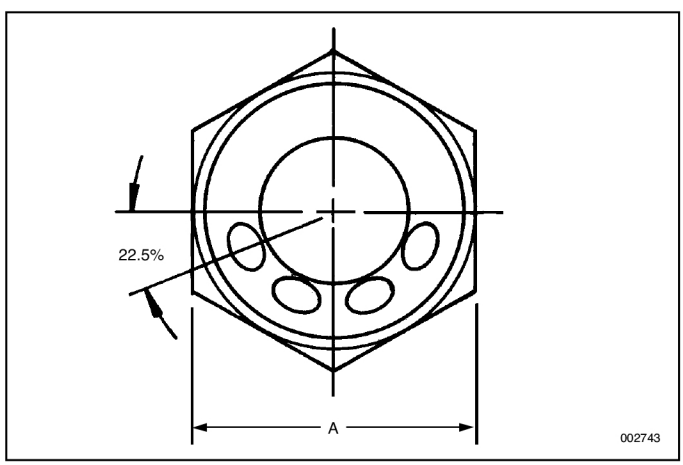

Size	A-In.	B-In.	C-In.
1/4 in.	5/8	1 9/16	21/32
3/8 in.	3/4	1 5/8	23/32
1/2 in.	15/16	1 31/32	27/32
3/4 in.	1 1/8	2 5/32	7/8
1 in.	1 13/32	2 9/16	1
1 1/4 in.	1 3/4	2 3/4	1 1/16
1 1/2 in.	2	2 31/32	1 1/16
2 in.	2 3/8	3	1
2 1/2 in.	3	3 1/2	1
3 in.	3 1/2	4 1/8	1 1/4

▸ NOTE: Refer to “Nozzle/Pressure Reducer Range Chart” in
▸ Design Section for detailed orifice range information.

Distributed by SIRINA
An authorized ANSUL
Distributor

* Orifice diameter must be specified when ordering nozzle. Refer to Orifice Size Chart in Manual Appendix Section.

ANSUL and INERGEN are trademarks of Ansul Incorporated or its affiliates.

Nozzle Deflector Shield

Description

The INERGEN® system nozzle deflector shield is used to control the pattern of the discharge of the INERGEN agent. The deflector shield helps keep the agent discharge away from false ceiling tiles and fragile light fixtures, avoiding damage to them.

The deflector shields are constructed of steel and painted with a cameo cream colored paint. They are available in five sizes.

Component	Material	Approvals
Nozzle Deflector Shield	Steel	FM Approved UL Listed (EX-4510)

Shipping Assembly Part No.	A Inlet NPT	B Length of Coupling	C Overall Length	D Deflector O.D.	E Coupling O.D.
417708	1/2 in.	1 7/8 in. (4.8 cm)	3 in. (7.6 cm)	3 3/8 in. (8.6 cm)	1 1/8 in. (2.9 cm)
417711	3/4 in.	2 in. (5.1 cm)	3 1/4 in. (8.3 cm)	3 3/8 in. (8.6 cm)	1 3/8 in. (3.5 cm)
417714	1 in.	2 3/8 in. (6.0 cm)	3 13/16 in. (9.7 cm)	4 7/8 in. (12.4 cm)	1 3/4 in. (4.4 cm)
417717	1 1/4 in.	2 5/8 in. (6.7 cm)	4 3/16 in. (10.6 cm)	4 7/8 in. (12.4 cm)	2 1/4 in. (5.7 cm)
417720	1 1/2 in.	3 1/8 in. (7.9 cm)	4 29/32 in. (12.5 cm)	5 21/32 in. (14.4 cm)	2 1/2 in. (6.4 cm)

NOTE: There are no deflector shields available for the 2, 2 1/2, or 3 in. models.

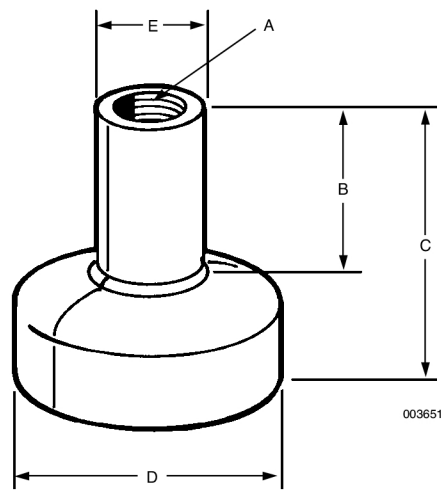

ANSUL and INERGEN are trademarks of Ansul Incorporated or its affiliates.

 ©2006 Ansul Incorporated

Inergen® clean Agent systems

Cylinder Bracketing

Description

The cylinder bracketing is designed to rigidly support the installed INERGEN® agent cylinders. The bracketing components are constructed of heavy structural steel. Bracket assemblies are available in modules for two to six cylinders and can also be connected together for any combination over six. Bracketing can be assembled to support single row, double row or back-to-back rows of cylinders. Bracketing components are painted with a red enamel coating. Uprights and back frame assemblies can be bolted or welded together, which ever makes the installation more convenient.

Component	Material	Approvals
Bracketing	Steel	FM Approved UL Listed (EX-4510)

Shipping Assembly Part No.	Description
845120	200 ft.3 (5.7 m3) cylinder strap (single cylinder)
845244	200 ft.3 (5.7 m3) cylinder channel with nuts and bolts (single cylinder)
845121	250 ft.3 (7.1 m3) cylinder strap (single cylinder)
845261	250 ft.3 (7.1 m3) cylinder channel with nuts and bolts (single cylinder)
845122	350 ft.3 (9.9 m3), 425 ft.3 (12.0 m3), 435 ft.3 (12.3 m3) cylinder strap (single cylinder)
845245	350 ft.3 (9.9 m3), 425 ft.3 (12.0 m3), 435 ft.3 (12.3 m3) cylinder channel with nuts and bolts (single cylinder)
879638	Back frame assembly (2 cylinder)
879639	Back frame assembly (3 cylinder)
879640	Back frame assembly (4 cylinder)
879641	Back frame assembly (5 cylinder)
879642	Back frame assembly (6 cylinder)
873257	Upright, for 200, 250, 350, and 435 ft.3 (12.3 m3) cylinders (used either for right side, left side or center (center upright required when connecting seven or more cylinders in a row))
426592	Upright, for 425 ft.3 (12.0 m3) cylinder (used either for right side, left side, or center (center upright required when connecting seven or more cylinders in a row))
873553	Single row or back-to-back row bracket foot (left side)
873554	Single row or back-to-back row bracket foot (right side)
873555	Double row bracket foot (left side)
873556	Double row bracket foot (right side)
418508	Center upright foot
879413	Connector (required to hook together back frames for seven or more cylinders)
873250	10.5 in. (26.7 cm) carriage bolt with nut (for single row 200 ft.3 (5.7 m3) cylinders)
873251	11 in (27.9 cm) carriage bolt with nut (for single row 250 ft.3 (7.1 m3) cylinders)
873252	12.5 in. (31.8 cm) carriage bolt with nut (for single row 350 ft.3 (9.9 m3) and 425 ft.3 (12.0 m3) cylinders)
418502	13 in. (33.0 cm) carriage bolt with nut (for single row 435 ft.3 (12.3 m3) cylinders)
873253	21 in. (53.3 cm) carriage bolt with nut (for double row 200 ft.3 (5.7 m3) cylinders)
873254	22 in. (55.9 cm) carriage bolt with nut (for double row 250 ft.2 (7.1 m3) cylinders)
873255	26 in. (66 cm) carriage bolt with nut (for double row 350 ft.3 (9.9 m3) and 425 ft.3 (12.0 m3) cylinders)
418503	27 in. (68.6 cm) carriage bolt with nut (for double row 435 ft.3 (12.3 m3) cylinders)
873091	Cylinder clamp (2 cylinders)
873092	Cylinder clamp (3 cylinders)
871683	Weigh rail support – single row
871682	Weigh rail support – double row
871684	Weigh rail support – back-to-back rows
423027	Weigh rail support back-to-back double row

Multi-Cylinder

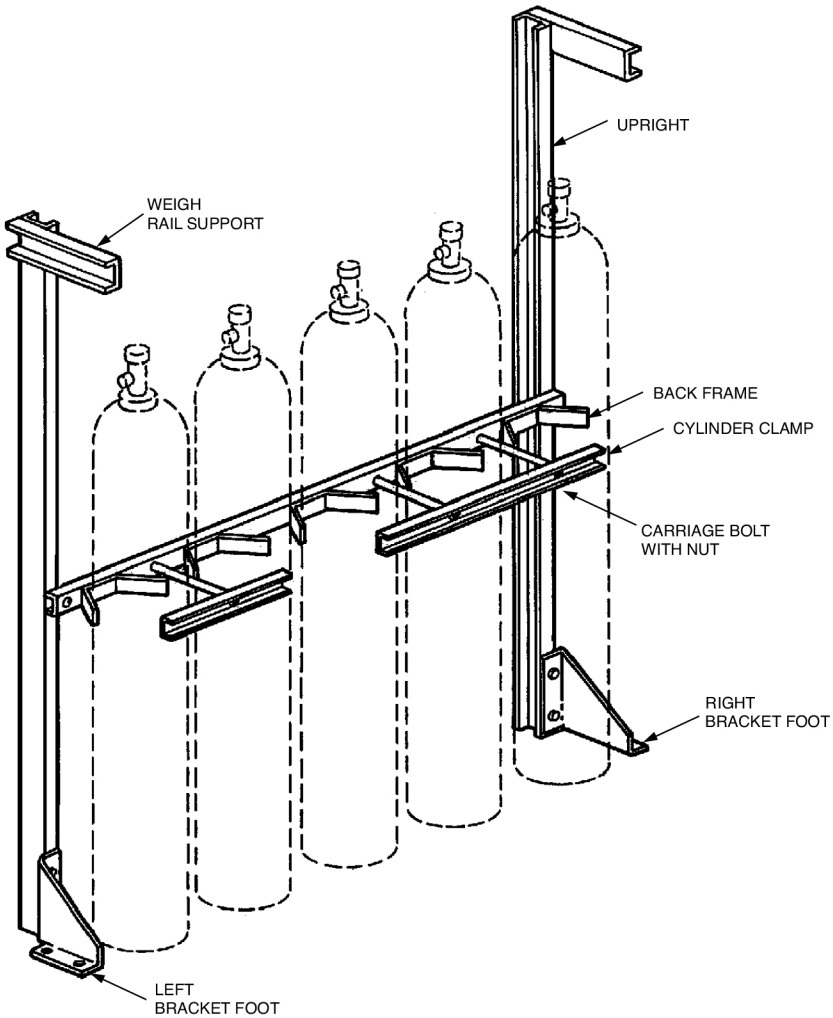

Single Cylinder

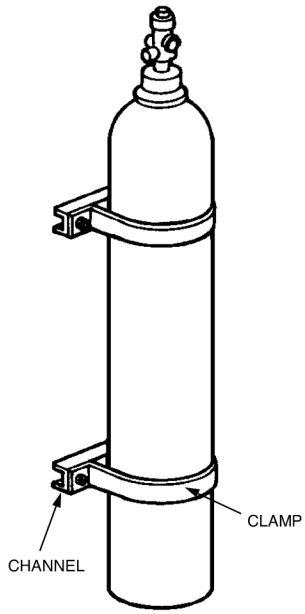

002200

Distributed by SIRINA
An authorized ANSUL
Distributor

ANSUL and INERGEN are trademarks of Ansul Incorporated or its affiliates.

 ©2006 Ansul Incorporated

Pressure Switch – DPST

Description

The pressure switch is operated by the INERGEN® agent pressure when the system is discharged. The pressure switch can be used to open or close electrical circuits to either shut down equipment or turn on lights or alarms. The double pole, single throw (DPST) pressure switch is constructed with a gasketed, water tight housing. The housing is constructed of malleable iron, painted red. A 1/4 in. NPT pressure inlet is used to connect the 1/4 in. pipe from the INERGEN system.

The pressure switch can be installed either before or after the pressure reducer in the distribution piping.

Minimum operating pressure is 50 PSI (3.5 bar).

Shipping Assembly Part No.	Description
846250	Pressure switch – DPST

Component	Material	Thread Size/Type	Electrical Rating	Approvals
Pressure Switch DPST	Switch: BAKELITE Housing: Malleable Iron Piston: Brass Cover: Brass	Conduit Inlet: 3/4 in. NPT Female Pressure Inlet: 1/4 in. NPT Female	2 HP – 240 VAC/ 480 VAC 2 HP – 250 VDC, 30A – 250V AC/DC 5A – 480V AC/DC	FM Approved UL Listed (EX-4510)

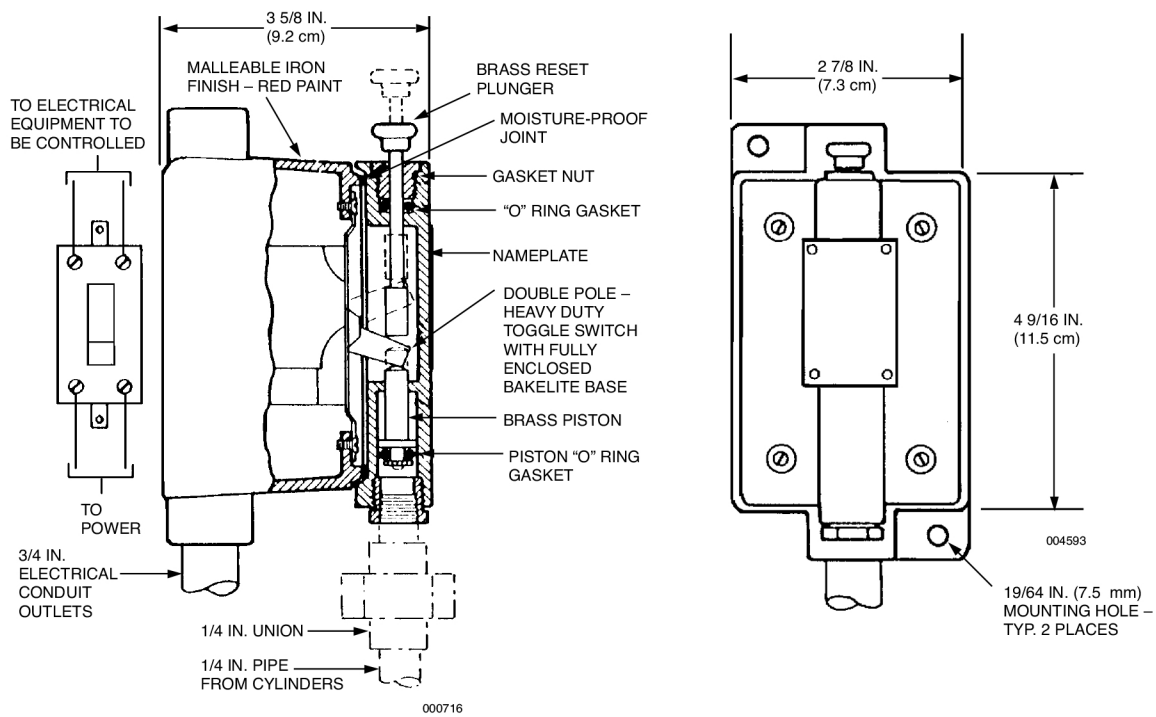

BAKELITE is a trademark of Union Carbide Corp.

ANSUL and INERGEN are trademarks of Ansul Incorporated or its affiliates.

 ©2006 Ansul Incorporated

Pressure Switch DPDT – Explosion-Proof

Description

The pressure switch is operated by the INERGEN® agent pressure when the system is discharged. The pressure switch can be used to open or close electrical circuits to either shut down equipment or turn on lights or alarms. The double pole, double throw (DPDT) pressure switch is constructed with an explosion-proof housing suitable for hazardous environments. A 1/4 in. NPT pressure inlet is used to connect the 1/4 in. pipe from the INERGEN system.

The pressure switch can be installed either before or after the pressure reducer in the distribution piping.

Minimum operating pressure is 50 PSI (3.5 bar)

Shipping Assembly Part No.	Description
843241	Pressure switch – DPDT

Component	Material	Thread Size/Type	Electrical Rating	Approvals
Pressure Switch DPDT	Housing: Malleable Iron	Conduit Inlet: 3/4 in. NPT Female Pressure Inlet: 1/4 in. NPT Female	10A - 125 VAC 5A - 250 VAC	UL Listed (EX-4510) FM Approved

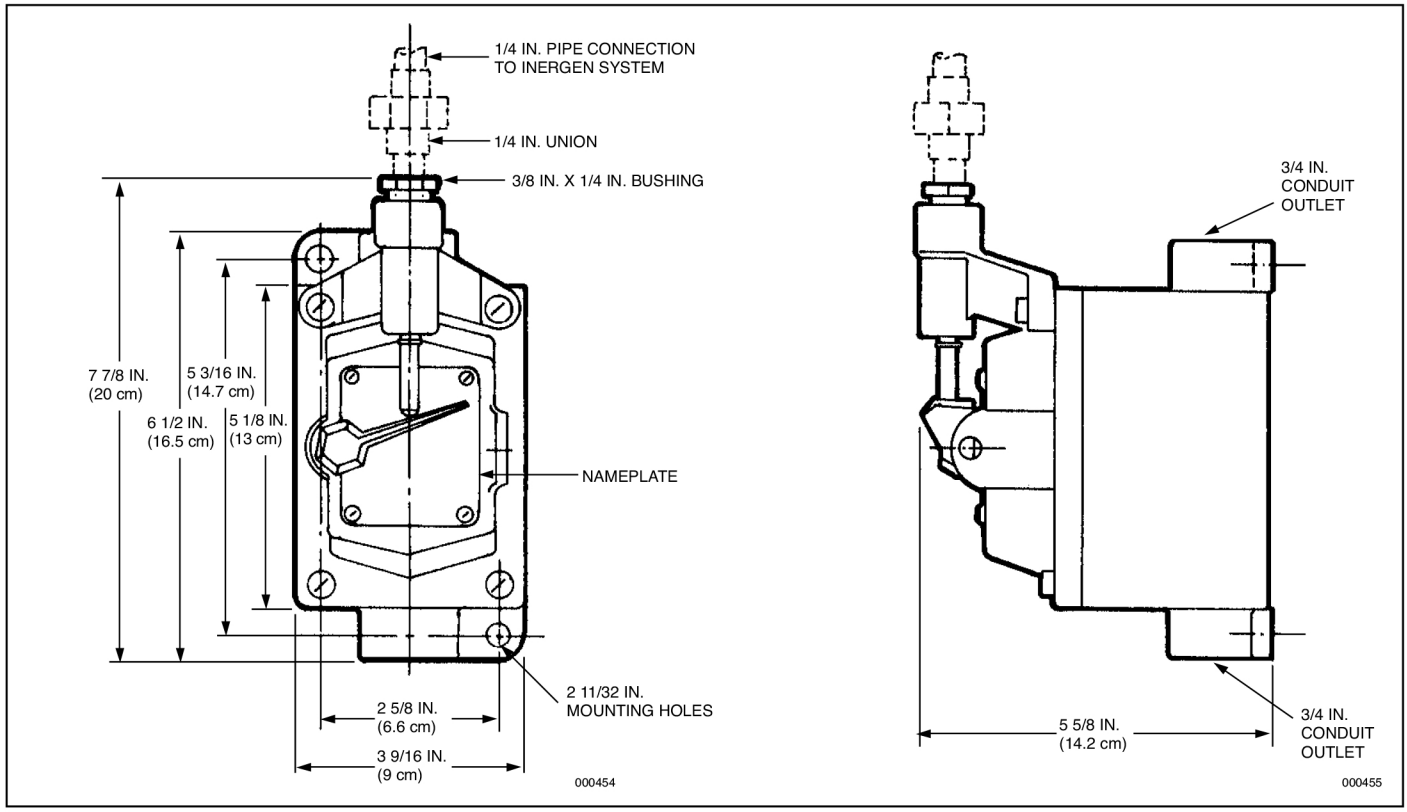

NOTE: Suitable for hazardous locations, Class I, Division I, Groups C, D, and Class II, Division I, Groups E, F, G.

ANSUL and INERGEN are trademarks of Ansul Incorporated or its affiliates.

 ©2006 Ansul Incorporated

Pressure Switch – 3PST

Description

The pressure switch is operated by the INERGEN® agent pressure when the system is discharged. The pressure switch can be used to open or close electrical circuits to either shut down equipment or turn on lights or alarms. The three pole, single throw (3PST) pressure switch is constructed with a gasketed, water tight housing. The switch may be used for 3 phase wiring requirements. The housing is constructed of malleable iron, painted red. A 1/4 in. NPT pressure inlet is used to connect the 1/4 in. pipe from the INERGEN system.

The pressure switch can be installed either before or after the pressure reducer in the distribution piping.

Minimum operating pressure is 50 PSI (3.5 bar)

Shipping Assembly Part No.	Description
842344	Pressure switch – 3PST

Component	Material	Thread Size/Type	Electrical Rating	Approvals
Pressure Switch 3PST	Switch: BAKELITE Housing: Malleable Iron Piston: Brass	Conduit Inlet: 3/4 in. NPT Female Pressure Inlet: 1/4 in. NPT Female	30A - 240 VAC 20A - 600 VAC 3 HP - 120 VAC 7.5 HP - 240 VAC 15 HP - 600 VAC 3 PHASE AC	UL Listed (EX-4510) FM Approved

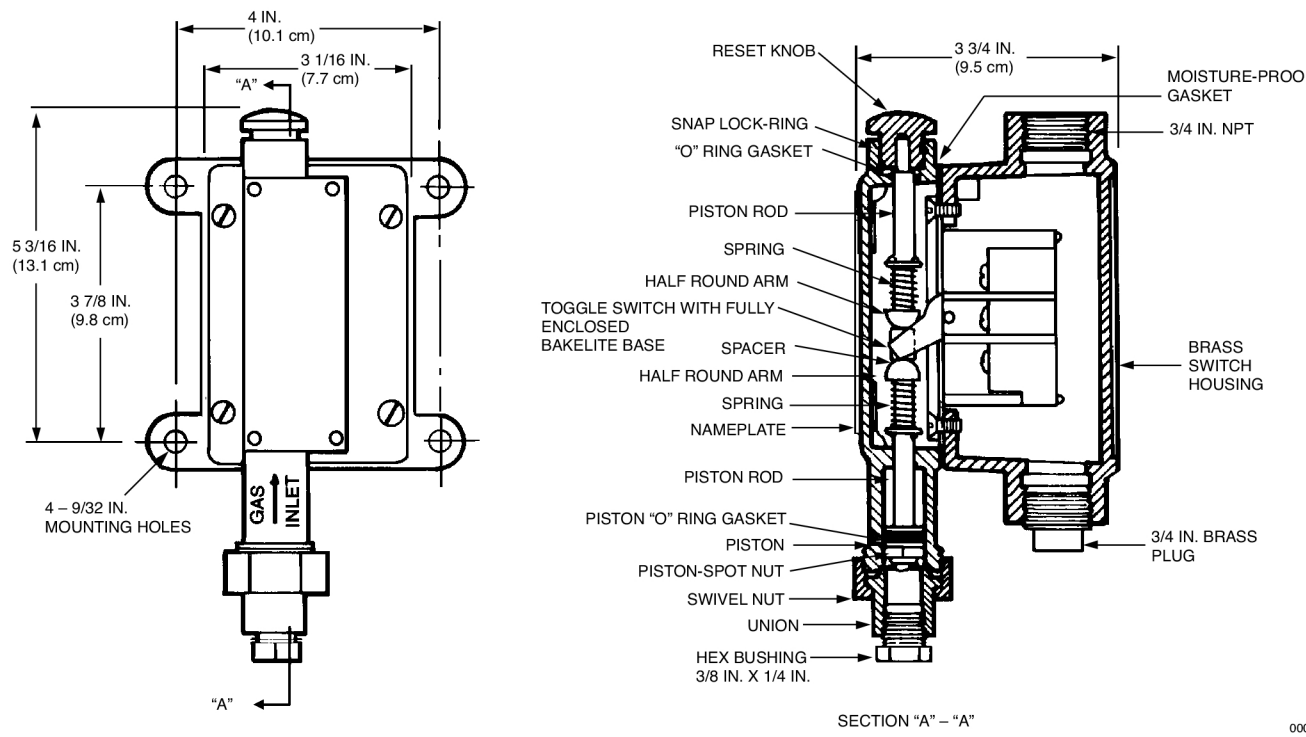

BAKELITE is a trademark of Union Carbide Corp.

ANSUL and INERGEN are trademarks of Ansul Incorporated or its affiliates.

 ©2006 Ansul Incorporated

Pressure Trip

Description

The pressure trip is connected to the actuation or discharge line of an INERGEN® system. By either pneumatic or manual actuation, the pressure trip can release spring or weight powered devices to close doors and windows, open fuel dump valves, close fire dampers or close fuel supply valves. The pressure trip is constructed of brass with two 1/4 in. NPT fittings for connection to discharge or actuation lines. The link on the pressure switch is released either pneumatically, by agent discharge pressure; or manually, by use of the pull ring. The link then releases the device which performs the auxiliary functions.

NOTE: Operating pressure must be a minimum of 75 psi (5.2 bar) with a maximum load of 70 lbs. (31.8 kg).

Shipping Assembly Part No.	Description
805156	Pressure trip

Component	Material	Thread Size/Type	Approvals
▸ Pressure Trip	Brass	1/4 in. NPT Female	FM Approved UL Listed (EX-4510)

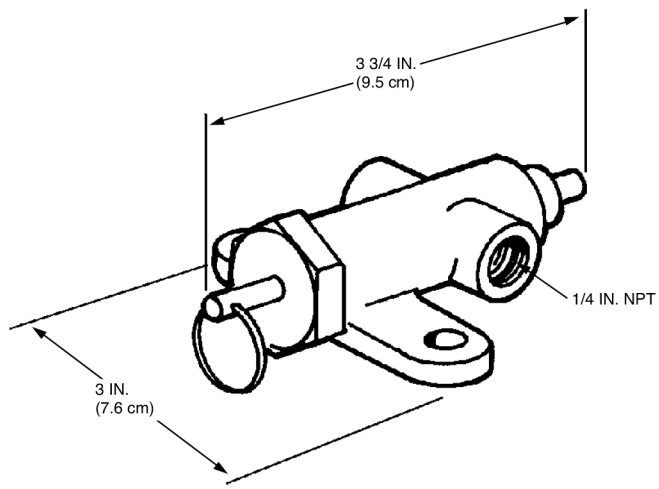

ANSUL and INERGEN are trademarks of Ansul Incorporated or its affiliates.

 ©2006 Ansul Incorporated

Pressure Test Assembly

Description

The Pressure Test Assembly, Part No. 416753 for CV-90 valves and Part No. 423923 for CV-98 valves, is required to properly perform the semi-annual pressure check per NFPA 2001. The pressure test assembly consists of a calibrated gauge, adaptor, and handwheel. The assembly is attached to the fill port of the INERGEN® valve. As the handwheel is turned in, the fill port is opened and the pressure is read on the gauge. After verifying the pressure in the cylinder, the handwheel is turned out, closing the fill port, and the assembly can be removed.

Shipping Assembly Part No.	Description
416753	Pressure Test Assembly – CV-90
423923	Pressure Test Assembly – CV-98
423657	Adaptor Convertor (converts CV-90 pressure tester to CV-98 valve)
426181	Adaptor Convertor (converts CV-98 pressure tester to CV-90 valve)

Two pressure tester convertors are also available. These convertors allow a CV-90 pressure test assembly to be used on a CV-98 valve and also a CV-98 pressure test assembly to be used on a CV-90 valve.

Component	Material	Approvals
Handwheel	Cast Zinc Alloy	FM Approved
Body	Brass	UL Listed (EX-4510)
Adaptor	Brass	
Gauge	Stainless Steel Case Laminated Safety Glass Lens	

416753

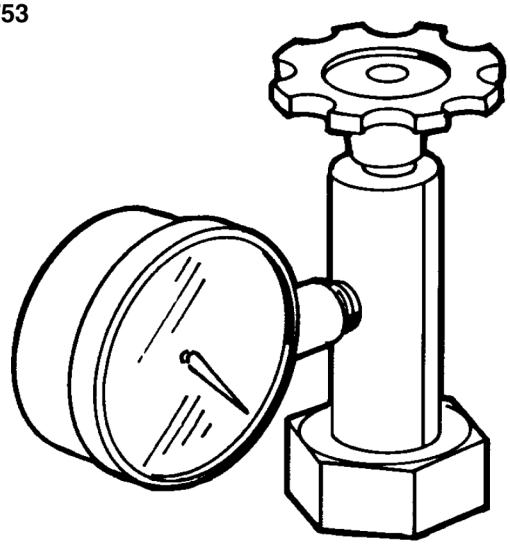

002256

423923

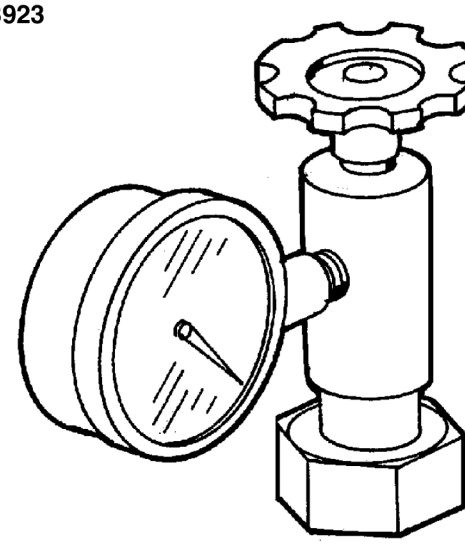

003686

ANSUL and INERGEN are trademarks of Ansul Incorporated or its affiliates.

 ©2006 Ansul Incorporated

Pressure Operated Siren

Description

The pressure operated siren is used to warn personnel of a system discharge. The siren will operate at the start of the discharge and will continue through most of the discharge time. The minimum decibel level at 10 ft. (3 m) is 90 dB. The siren is finished with red polyester urethane powder paint.

The siren is operated with the INERGEN® pressure from the system. The piping is normally run from the system distribution manifold. The design requirements are as follows:

- Required Pipe: 1/4 in. Schedule 40
- Flow Rate: 100 cu. ft. per minute (2.8 cu. m per minute)
- Maximum Sirens: 4
- Maximum Pipe Length: 200 ft. (61 m) minus 1 ft. (.3 m) for every elbow used
- Design of system must include agent used through siren if siren is not located in hazard area

Shipping Assembly Part No.	Description
419700	Pressure operated siren

Component	Material	Thread Size/Type	Approvals
Siren	Body: Brass Grille: Steel Screen: Stainless Steel	1/4 IN. NPT Female	UL EX-4510

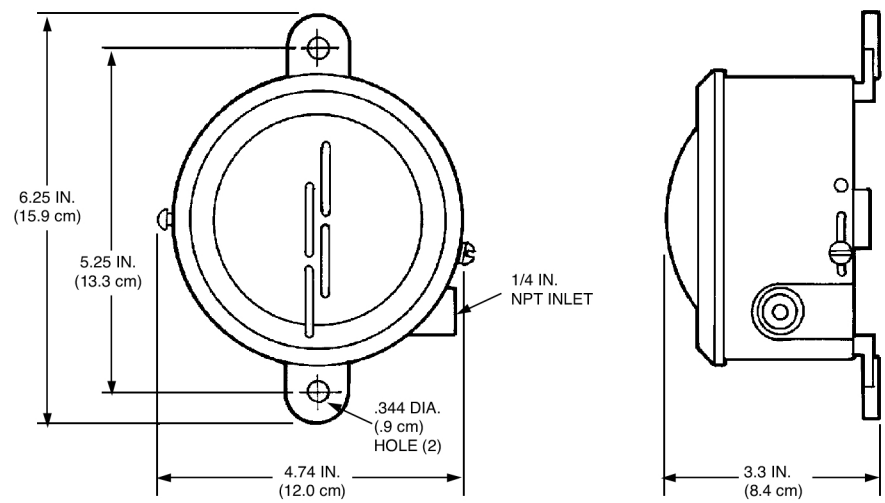

ANSUL and INERGEN are trademarks of Ansul Incorporated or its affiliates.

Time Delay Assembly

Description

In some applications, the system discharge must be delayed for a short time following actuation. This is usually in areas where it is necessary to evacuate personnel prior to discharge. A manual release is incorporated on the time delay valve to allow instant override of the time delay. The length of delay is factory set and is not adjustable.

The time delay assembly uses INERGEN® pressure to power the factory-set delay mechanism. Install the assembly in the discharge piping, either directly after the control (pilot) cylinder or further along the piping. The assembly is reversible to accommodate right and left hand configurations and will operate in any mounting orientation. After the discharge is complete, pressure in the assembly slowly returns to normal and closes the time delay valve.

Shipping Assembly Part No.	Description
426170	60 Second time delay
854169	30 Second time delay

Component	Material	Approvals
Valve	Brass	UL Listed (EX-4510)
Accumulator	Steel (Sch. 80 Pipe)	

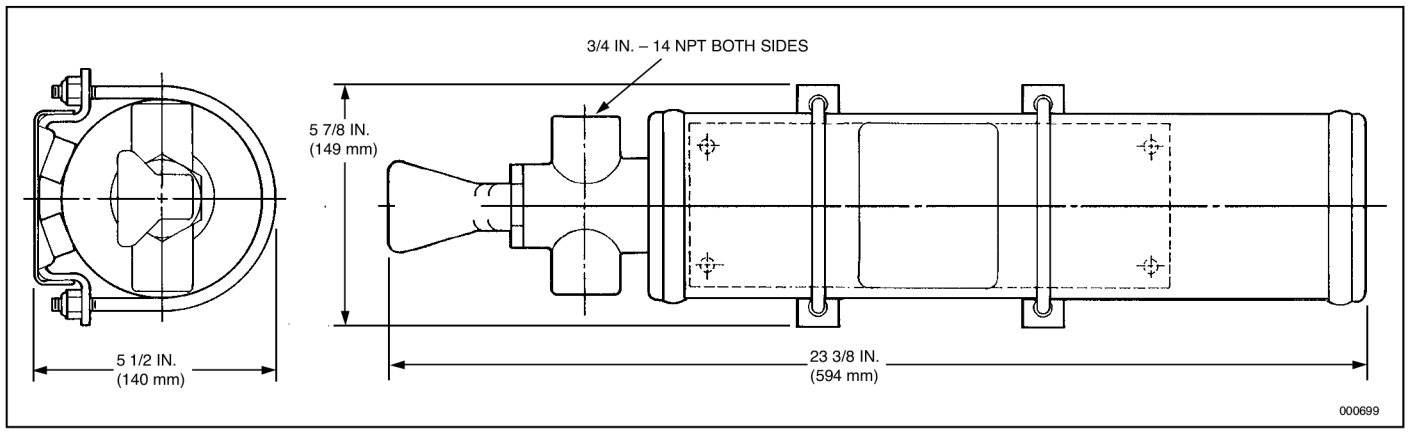

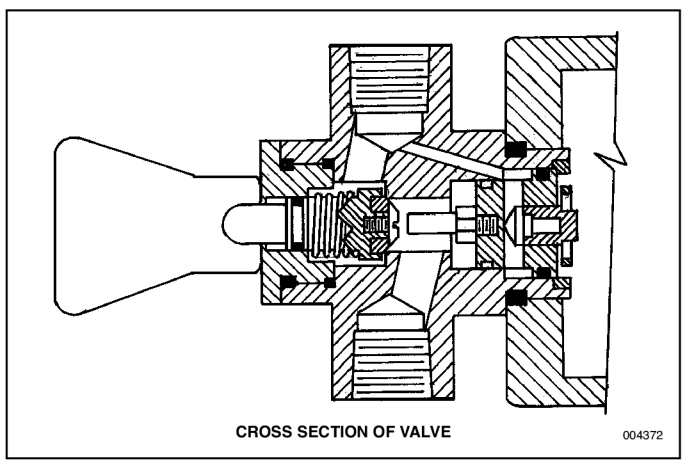

ANSUL and INERGEN are trademarks of Ansul Incorporated or its affiliates.

Nameplate – MAIN

Description

The "MAIN" nameplate is available for labeling components and/or remote pull stations to distinguish them from reserve system components. The nameplate is furnished with four mounting holes for ease of installation.

Shipping Assembly Part No.	Description
841942	Nameplate – MAIN

Component	Material	Mounting Hole Size	Approvals
Nameplate	Aluminum	13/64 in. (.52 cm)	FM Approved UL Listed (EX-4510)

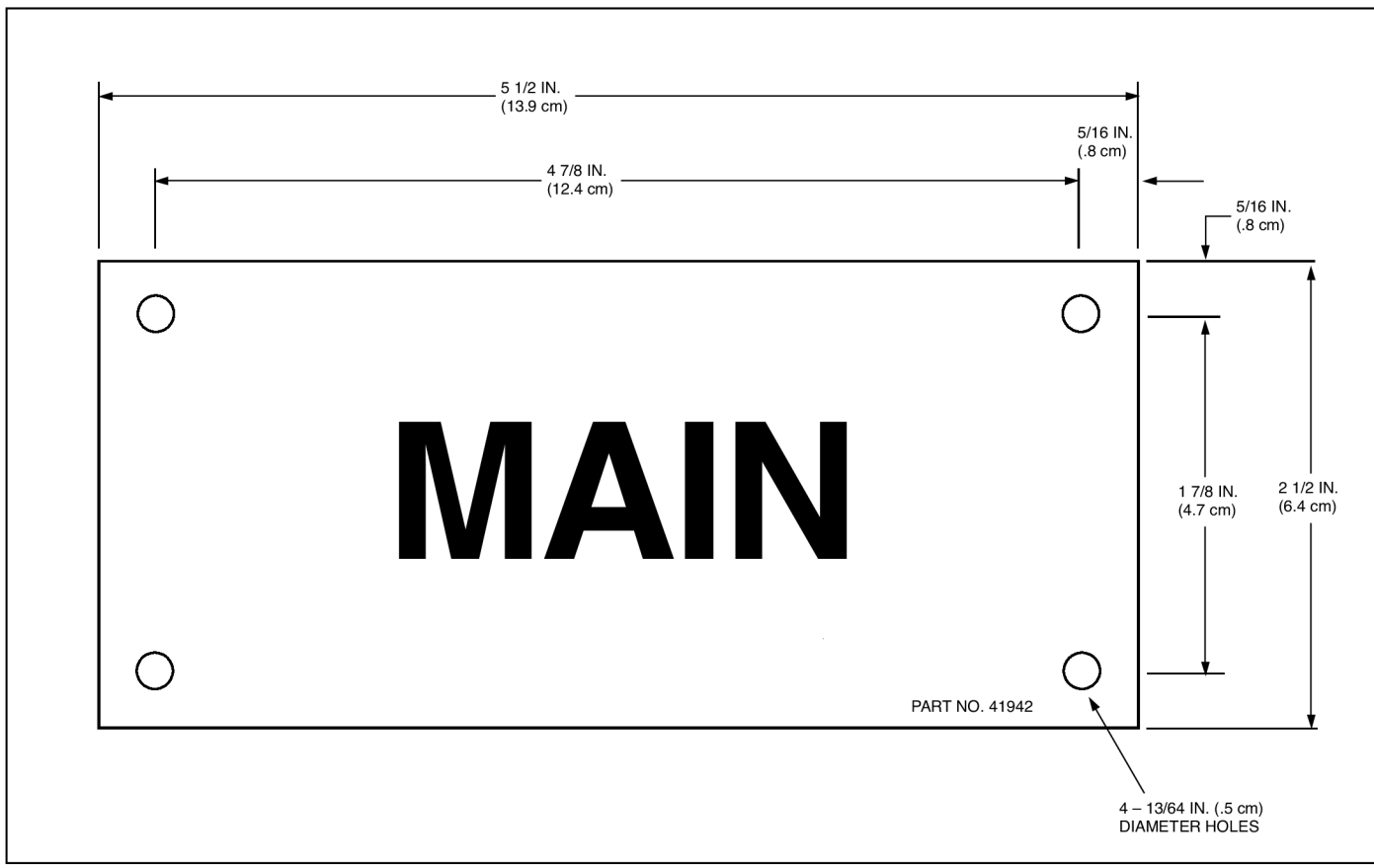

ANSUL and INERGEN are trademarks of Ansul Incorporated or its affiliates.

 ©2006 Ansul Incorporated

Nameplate – RESERVE

Description

The "RESERVE" nameplate is available for labeling components and/or remote pull stations to distinguish them from main system components. The nameplate is furnished with four mounting holes for ease of installation.

Shipping Assembly Part No.	Description
841943	Nameplate – RESERVE

Component	Material	Mounting Hole Size	Approvals
Nameplate	Aluminum	13/64 in. (.52 cm)	FM Approved UL Listed (EX-4510)

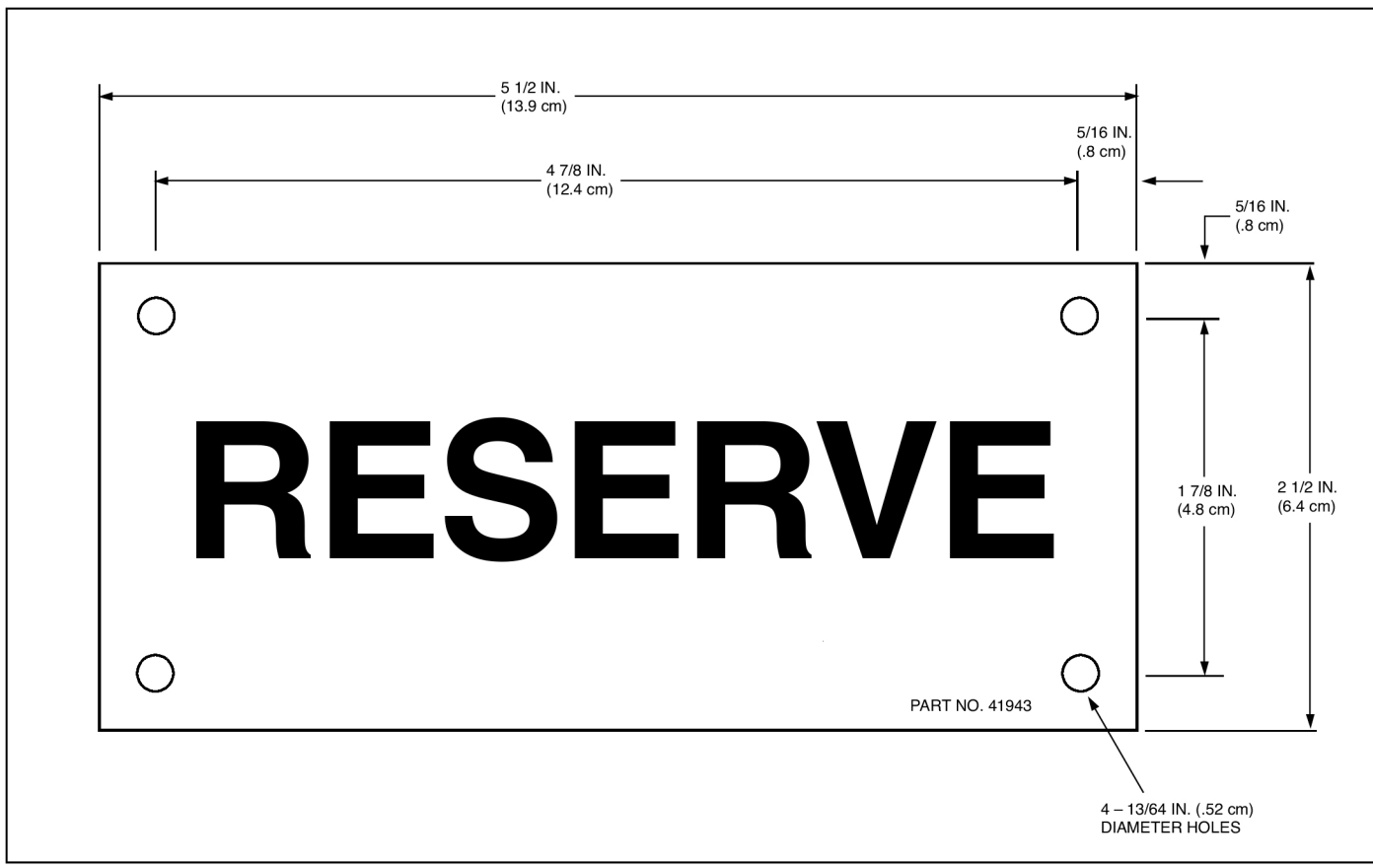

ANSUL and INERGEN are trademarks of Ansul Incorporated or its affiliates.

Warning Plate – Inside Room With Alarm

Description

The warning plate is available for mounting inside the hazard area to warn the personnel to vacate the hazard area when the alarm sounds. The warning plate is furnished with four mounting holes for ease of installation. The plate is constructed of aluminum.

Shipping Assembly Part No.	Description
416265	Warning Plate – inside room with alarm

Component	Material	Mounting Hole Size	Approvals
Warning Plate	Aluminum	1/4 in. (.64 cm)	FM Approved UL Listed (EX-4510)



ANSUL and INERGEN are trademarks of Ansul Incorporated or its affiliates.

 ©2006 Ansul Incorporated

Warning Plate – Outside Room Without Alarm

Description

The warning plate is available for mounting outside the hazard area to warn the personnel that the space is protected by an INERGEN® system and no one should enter after a discharge without being properly protected. The warning plate is furnished with four mounting holes for ease of installation.

Shipping Assembly Part No.	Description
416266	Warning Plate – outside room

Component	Material	Mounting Hole Size	Approvals
▸ Warning Plate	Aluminum	7/32 in. (.56 cm)	FM Approved UL Listed (EX-4510)



ANSUL and INERGEN are trademarks of Ansul Incorporated or its affiliates.

Distributed by SIRINA
An authorized ANSUL
Distributor

INERGEN® 150-BAR SYSTEM SPECIFICATIONS

Data/Specifications

ENVIRONMENTAL IMPACT

INERGEN agent is a mixture of three naturally occurring gases: nitrogen, argon, and carbon dioxide. As INERGEN agent is derived from gases present in the earth's atmosphere, it exhibits no ozone depleting potential, does not contribute to global warming, nor does it contribute unique chemical species with extended atmospheric lifetimes. Because INERGEN agent is composed of atmospheric gases, it does not pose the problems of toxicity associated with the chemically derived Halon alternative agents.

PRODUCT DESCRIPTION

The INERGEN Fire Suppression System, manufactured by ANSUL, is an engineered system utilizing a fixed nozzle agent distribution network. The system is designed and installed in accordance with the National Fire Protection Association (NFPA) Standard 2001, "Clean Agent Fire Extinguishing Systems." When properly designed, the INERGEN system will extinguish surface burning fire in Class A, B, and C hazards by lowering the oxygen content below the level that supports combustion.

INERGEN agent has also been tested by FMRC for inerting capabilities. Those tests have shown that INERGEN agent, at design concentrations between 40% and 50%, has successfully inerted mixtures of propane/air, and methane/air.

The system can be actuated by detection and control equipment for automatic system operation along with providing local and remote manual operation as needed. Accessories are used to provide alarms, ventilation control, door closures, or other auxiliary shutdown or functions.

When INERGEN agent is discharged into a room, it introduces the proper mixture of gases that will allow a person to breathe in a reduced oxygen atmosphere.

A system installation and maintenance manual is available containing information on system components and procedures concerning design, operation, inspection, maintenance, and recharge.

The system is installed and serviced by authorized distributors that are trained by the manufacturer.

Basic Use – The INERGEN system is particularly useful for suppressing fires in hazards where an electrically non-conductive medium is essential or desirable; where clean-up of other agents present a problem; or where the hazard is normally occupied and requires a non-toxic agent.

The following are typical hazards protected by INERGEN systems:

- Computer rooms
- Subfloors
- Tape storage
- Telecommunication/Switchgear
- Vaults
- Process equipment
- All normally occupied or unoccupied electronic areas where equipment is either very sensitive or irreplaceable

Composition and Materials – The basic system consists of extinguishing agent stored in high strength alloy steel cylinders. Various types of actuators, either manual or automatic, are available for release of the agent into the hazard area. The agent is distributed and discharged into the hazard area through a network of piping and nozzles. Each nozzle is drilled with a fixed orifice designed to deliver a uniform discharge to the protected area. On large hazards, where three or more cylinders are required, a screwed or welded pipe manifold assembly is employed. The cylinder(s) is connected to the distribution piping or the manifold by means of a flexible discharge bend and check valve assembly.

Additional equipment includes – Control panels, releasing devices, remote manual pull stations, corner pulleys, door closures, pressure trips, bells and alarms, and pneumatic switches. All or some are required when designing a total system.

INERGEN Agent – INERGEN agent is a mixture of three inerting (oxygen diluting) gases: 52% nitrogen, 40% argon, and 8% carbon dioxide. INERGEN gas extinguishes fire by lowering the oxygen content below the level that supports combustion. When INERGEN agent is discharged into a room, it introduces the proper mixture of gases that still allow a person to breathe in a reduced oxygen atmosphere. It actually enhances the body's ability to assimilate oxygen. The normal atmosphere in a room contains 21% oxygen and less than 1% carbon dioxide. If the oxygen content is reduced below 15%, most ordinary combustibles will cease to burn. INERGEN agent will reduce the oxygen content to approximately 12.5% while increasing the carbon dioxide content to about 3%. The increase in the carbon dioxide content increases a person's respiration rate and the body's ability to absorb oxygen. Simply stated, the human body is stimulated by the carbon dioxide to breathe more deeply and rapidly to compensate for the lower oxygen content of the atmosphere.

Cylinders – The cylinders are constructed, tested, and marked in accordance with applicable Dept. of Transportation (DOT) and the U.S. Bureau of Explosives specifications. As a minimum, the cylinders must meet the requirements of DOT 3AA2300 or 3AA2015+.

Cylinder Assembly – The cylinder assembly is of steel construction with a red standard finish. Four sizes are available to meet specific needs. Each is equipped with a pressure seat-type valve equipped with gauge. The valve is constructed of forged brass and is attached to the cylinder providing a leak tight seal. The valve also includes a safety pressure relief device which provides relief at 2900-3300 psi (20685-23167 kPA) per CGA test method. Cylinder charging pressure is 2175 psi at 70 °F (14997 kPA at 21 °C). The cylinders are shipped with a maintenance record card and shipping cap attached. The cap is attached to the threaded collar on the neck of each cylinder to protect the valve while in transit. The cylinder serial number and date of manufacture are stamped near the neck of each cylinder.

Electric Actuator – Electric actuation of an agent cylinder is accomplished by an electric actuator interfaced through an AUTOPULSE® Control System. This actuator can be used in hazardous environments where the ambient temperature range is between 32 °F and 130 °F (0 °C and 54 °C). In auxiliary or override applications, a manual lever actuator can be installed on top of the actuator.

Manual or Pneumatic Actuators – Manual/pneumatic actuators are available for lever actuation on the cylinder valve. Manual actuation is accomplished by pulling the hand lever on the actuator.

Detection System – The AUTOPULSE Control System is used where an automatic electronic control system is required to actuate the INERGEN system. This control system is used to control a single fixed fire suppression or alarm system based on inputs received from fire detection devices. The detection circuits can be configured using cross, counting, independent or priority-zone (counting) concepts. The control system has been tested to the applicable FCC Rules and Regulations for Class A Computing devices.

Nozzles – Nozzles are designed to direct the discharge of INERGEN agent using the stored pressure from the cylinders. Ten sizes of nozzles are available. The system design specifies the nozzle and orifice size to be used for proper flow rate and distribution pattern. The nozzle selection depends on the hazard and location to be protected.

Pressure Reducer – The pressure reducer is required in the distribution piping to restrict the flow of INERGEN agent, thus reducing the agent pressure down stream of the reducer. The pressure reducer contains a stainless steel orifice plate which is drilled to the specific size hole required based on the hydraulic calculation. The orifice plate provides readily visible orifice identification. The pressure reducer is available in nine sizes: 1/2 in., 3/4 in., 1 in., 1 1/4 in., 1 1/2 in., 2 in., 2 1/2 in., 3 in., and 4 in. NPT.

PRODUCT DESCRIPTION

Pipe and Fittings – The system manifold must be constructed of Schedule 80 or 160 piping and 2000 or 3000 psi iron fittings, threaded or welded. The distribution piping down stream from the orifice union must be constructed of a minimum of Schedule 40 piping with class 300 malleable iron threaded fittings or welded steel fittings. All piping must be black iron of the following type and grade: ASTM A-53 seamless or electric resistance welded, grade A or B, or ASTM A-106 grade A, B, or C. Do not use ASTM A-120, ASTM A-53 type F or ordinary cast iron pipe or fittings.

Limitations – The INERGEN system must be designed and installed within the guidelines of the manufacturer's design, installation, operation, inspection, recharge, and maintenance manual. The ambient temperature limitations are 32 °F to 130 °F (–0 °C to 54 °C). All AUTOPULSE Control Systems are designed for indoor applications and for temperature ranges between 32 °F and 120 °F (0 °C and 49 °C).

TECHNICAL DATA

Applicable Standards: The INERGEN system complies with NFPA Standard 2001, Standard for Clean Agent Fire Extinguishing Systems, and EPA Program SNAP, Significant New Alternate Policy.

Agent is listed and approved by Underwriters Laboratories, Inc. (UL) and Factory Mutual (FM).

INSTALLATIONS

All system components and accessories must be installed by personnel trained by the manufacturer. All installations must be performed according to the guidelines stated in the manufacturer's design, installation, operation, inspection, recharge, and maintenance manual.

AVAILABILITY AND COST

Availability – INERGEN Systems are sold and serviced through a network of independent distributors located in most states and many foreign countries.

Cost – Cost varies with type of system specified, size, and design.

PRODUCT WARRANTY

Warranty – The components of the fire suppression system supplied by Ansul Inc. ("ANSUL") are warranted to you as the original purchaser for one year from the date of delivery against defects in workmanship and material. ANSUL will replace or repair any ANSUL supplied components, which, in its opinion, are defective and have not been tampered with or subjected to misuse, abuse, or exposed to highly corrosive conditions provided that written notice of the alleged defect shall have been given to ANSUL within 30 days after discovery thereof and prior to the expiration of one year after delivery, and further provided that if ANSUL so instructs, such article or part thereof is promptly returned to ANSUL with shipping charges prepaid.

Disclaimer of Warranty and Limitation of Damage – The warranty described above is the only one given by ANSUL concerning this system. ANSUL MAKES NO OTHER WARRANTIES OF ANY KIND, WHETHER EXPRESS OR IMPLIED, INCLUDING THE WARRANTIES OF MERCHANTABILITY AND FITNESS FOR PARTICULAR PURPOSE. ANSUL'S MAXIMUM RESPONSIBILITY FOR ANY CLAIMS WHETHER IN CONTRACT, TORT, NEGLIGENCE, BREACH OF WARRANTY, OR STRICT LIABILITY SHALL BE LIMITED TO THE PURCHASE PRICE OF THE SYSTEM. UNDER NO CIRCUMSTANCES SHALL ANSUL BE RESPONSIBLE FOR SPECIAL, CONSEQUENTIAL, OR INCIDENTAL DAMAGES OF ANY KIND. ANSUL does not assume or authorize any other person to assume for it any additional liability in connection with the sale of this system.

ANSUL, AUTOPULSE and INERGEN are trademarks of Ansul Incorporated or its affiliates.

For repairs, parts, and service of the ANSUL fire suppression system, contact a local ANSUL representative, or Ansul Incorporated, Marinette, WI 54143-2542, 800-TO-ANSUL (862-6785).

FALSE DISCHARGE WARRANTY

Subject to the conditions set forth below, ANSUL will, as purchaser's sole remedy, replace INERGEN gas and pay reasonable costs to recharge the INERGEN/Detection and Control System where, in ANSUL's opinion, the discharge has occurred due to a defect in the material or workmanship of the products provided by ANSUL. This warranty is extended only to the original purchaser of the INERGEN/Detection and Control System and only for a period of one year from the date of installation of the INERGEN/Detection and Control System.

ANSUL will only replace INERGEN gas and pay reasonable costs to recharge the INERGEN/Detection and Control System where the discharge occurs due to a defect in the material or workmanship of the products provided by ANSUL. For example, ANSUL will not be responsible for discharges due to faulty maintenance or installation or service, intentional acts by the owner or third parties, or circumstances over which ANSUL has no control. ANSUL will not be responsible for discharges of the INERGEN/Detection and Control System which occur if the INERGEN/Detection and Control System, as initially installed, has been altered or modified.

This warranty shall be effective only if the original purchaser maintains a semi-annual service agreement for the INERGEN/Detection and Control System with an Authorized ANSUL Distributor from the date of installation. This warranty covers only those INERGEN/Detection and Control Systems purchased from ANSUL or its Authorized Distributors and only those INERGEN/Detection and Control Systems which incorporate and use only hardware and components, including detection and control devices manufactured, sold, or approved by ANSUL. This warranty may not be assigned or transferred to others.

ANSUL Product Services Department must be notified within three days of the discharge of the INERGEN/Detection and Control System and must approve the cost of INERGEN gas and recharge service in advance.

Except as provided above, ANSUL MAKES NO WARRANTIES OF ANY KIND, WHETHER EXPRESSED OR IMPLIED, INCLUDING THE WARRANTIES OF MERCHANTABILITY AND FITNESS FOR A PARTICULAR PURPOSE, UNDER NO CIRCUMSTANCE SHALL ANSUL HAVE ANY LIABILITY FOR CONSEQUENTIAL, INCIDENTAL, SPECIAL OR SIMILAR DAMAGES. ANSUL SHALL HAVE NO LIABILITY FOR ANY DAMAGES DUE TO DELAY IN RECHARGING THE "INERGEN"/DETECTION AND CONTROL SYSTEM. ANSUL'S MAXIMUM LIABILITY FOR DIRECT DAMAGES IS LIMITED TO THE REPLACEMENT OF INERGEN GAS AND REASONABLE COSTS TO RECHARGE THE "INERGEN"/DETECTION AND CONTROL SYSTEM.

This warranty is not effective unless Ansul Form No. F-9346 is completed and returned to ANSUL within 10 days of the commissioning of the INERGEN/Detection and Control System.

MAINTENANCE

Maintenance is a vital step in the performance of a fire suppression system. As such, it must be performed by an authorized ANSUL distributor in accordance with NFPA 2001 and the manufacturer's design, installation, recharge, and maintenance manual. When replacing components on the Ansul system, use only Ansul approved parts.

TECHNICAL SERVICES

For information on the proper design and installation, contact a local authorized INERGEN System distributor. The ANSUL applications engineering department is also available to answer design and installation questions. Call 800-TO-ANSUL (862-6785).

ANSUL | tyco Fire & Security

Tyco Safety Products
Marinette, WI 54143-2542

715-735-7411
www.ansul.com

©2006 Ansul Incorporated
Form No. F-9312-10

INERGEN® EXTINGUISHING AGENT

Data/Specifications

FEATURES

INERGEN® extinguishing agent used in ANSUL® engineered systems is particularly useful for hazards where an electrical, non-conductive medium is essential or desirable; where clean-up of other agents presents a problem; where hazard obstructions require the use of a gaseous agent; or where the hazard is normally occupied and requires a non-toxic agent.

The following are typical hazards protected by INERGEN systems:

- Computer rooms
- Subfloors
- Tape storage
- Telecommunications/Switchgear
- Vaults
- Process equipment
- All normally occupied or unoccupied areas where electronic equipment is either very sensitive or irreplaceable

ENVIRONMENTAL IMPACT

INERGEN agent is a mixture of three naturally occurring gases: nitrogen, argon and carbon dioxide. As INERGEN agent is derived from gases present in the earth's atmosphere, it exhibits no ozone depleting potential, does not contribute to global warming, nor does it contribute unique chemical species with extended atmospheric lifetimes. Because INERGEN agent is composed of atmospheric gases, it does not pose the problems of toxicity associated with the chemically derived Halon alternative agents.

DESCRIPTION

INERGEN agent is a plentiful, non-corrosive gas that does not support combustion nor react with most substances. INERGEN agent contains only naturally-occurring gases which have no impact on the ozone or the environment in general. INERGEN agent is a mixture of three inerting (oxygen diluting) gases: 52% nitrogen, 40% argon, and 8% carbon dioxide. INERGEN agent extinguishes fire by lowering the oxygen content below the level that supports combustion. When INERGEN agent is discharged into a room, it introduces the proper mixture of gases that still allow a person to breathe in a reduced oxygen atmosphere. It actually enhances the body's ability to assimilate oxygen. The normal atmosphere in a room contains approximately 21% oxygen and less than 1% carbon dioxide. If the oxygen content is reduced below 15%, most ordinary combustibles will not burn. INERGEN agent will reduce the oxygen content to approximately 12.5% while increasing the carbon dioxide content to about 3%. The increase in the carbon dioxide content increases a person's respiration rate and the body's ability to absorb oxygen. Simply stated, the human body is stimulated by the carbon dioxide to breathe more deeply and rapidly to compensate for the lower oxygen content of the atmosphere.

ANSUL and INERGEN are trademarks of Ansul Incorporated or its affiliates.

PERFORMANCE

INERGEN is an effective fire extinguishing agent that can be used on many types of fires. INERGEN extinguishing system units are designed for total flooding protection against Class A surface burning, Class B flammable liquid, and Class C fires occurring within an enclosure by lowering the oxygen content below the level that supports combustion.

▸ INERGEN agent has been tested by FM Approvals for inerting capabilities. Those tests have shown that INERGEN agent, at design concentrations between 40% and 50%, has successfully inerted mixtures of propane/air, and methane/air.

PHYSICAL PROPERTIES OF INERGEN

Specific gravity:	0.085 lbs./cu. ft. (1.36 kg/m^3)
Vapor density:	1.1 (Air = 1)
Approximate molecular weight:	34

APPROVAL

INERGEN agent complies with the NFPA Standard 2001, Standard for Clean Agent Fire Extinguishing Systems and EPA Program SNAP, Significant New Alternate Policy.

▸ Agent is listed and approved by Underwriters Laboratories, Inc. (UL) and FM Approvals.

Containers meet the applicable Department of Transportation (DOT) specifications.

Distributed by SIRINA
An authorized ANSUL Distributor

ANSUL® | tyco Fire & Security
Tyco Safety Products
Marinette, WI 54143-2542
715-735-7411
www.ansul.com

©2006 Ansul Incorporated
Form No. F-200045-2

1. IDENTIFICATION OF THE SUBSTANCE/PREPARATION AND OF THE COMPANY/UNDERTAKING

1.1. Identification of the preparation

Product Name:	"INERGEN"
Chemical Name:	N/A – This is a mixture/preparation.
CAS No.:	N/A – This is a mixture/preparation.
Chemical Formula:	N/A – This is a mixture/preparation.
EINECS Number:	N/A – This is a mixture/preparation.

1.2. Use of the preparation

The intended or recommended use of this preparation is to discharge a FIRE EXTINGUISHING AGENT.

1.3. Company identification

Manufacturer/Supplier:	ANSUL INCORPORATED
Address:	One Stanton Street, Marinette, WI 54143-2542
Prepared by:	Safety and Health Department
Phone:	715-735-7411
Internet/Home Page:	http://www.ansul.com
Date of Issue:	September, 2004

1.4. Emergency telephone

CHEMTREC 800-424-9300 or 703-527-3887

2. COMPOSITION/INFORMATION ON INGREDIENTS

2.1.

Ingredient Name:	Nitrogen.
Chemical Formula:	N_2.
CAS No.:	7727-37-9.
EINECS Number:	231-783-9.
Concentration, Wt %:	42.5 %
Hazard Identification:	See Heading 3.

Ingredient Name:	Argon.
Chemical Formula:	Ar.
CAS No.:	7440-37-1.
EINECS Number:	231-147-0.
Concentration, Wt %:	47 %.
Hazard Identification:	See Heading 3.

Ingredient Name:	Carbon Dioxide.
Chemical Formula:	CO_2.
CAS No.:	124-38-9.
EINECS Number:	204-696-9.
Concentration, Wt %:	10.5 %.
Hazard Identification:	See Heading 3.

Distributed by SIRINA
An authorized ANSUL
Distributor

3. HAZARDS IDENTIFICATION

FOR HUMANS:

Product:

EU Classification:		Nonflammable Gas.
R Phrases:		None.
S Phrases	9	Keep container in a well ventilated place.

Limit Values for Exposure:

Nitrogen:		None established.
Argon:		None established.
Carbon Dioxide:	OSHA PEL:	5,000 ppm.
	ACGIH TLV-TWA:	5,000 ppm.
	ACGIH TLV-STEL:	30,000 ppm.

IDLH (Immediately Dangerous for Life and Health): 50,000 ppm.

Neither this preparation nor the substances contained in it have been listed as carcinogenic by National Toxicology

Program, IARC, or OSHA.

Distributed by SIRINA
An authorized ANSUL
Distributor

SIGNS AND SYMPTOMS:

Acute Exposure:

Eye Contact:	Non-irritating gas.
Skin Contact:	Non-irritating gas.
Inhalation:	Vapor is heavier than air and can cause suffocation by reducing oxygen available for breathing. Breathing very high concentrations of vapor can cause lightheadedness, giddiness, shortness of breath, muscular tremors, and weakness, acrocyanosis. Also unconsciousness or even death.
Ingestion:	Non-irritating gas. Not a likely route of entry.
Chronic Overexposure:	No data available.

MEDICAL CONDITIONS GENERALLY AGGRAVATED BY EXPOSURE: None known.

FOR ENVIRONMENT:

Carbon dioxide is a global warming gas.

4. FIRST AID MEASURES

Eye Contact:	Immediately flush eyes with water for a minimum of 15 minutes. If redness, itching or a burning sensation develops, get medical attention. Treat for frostbite if necessary.
Skin Contact:	If redness, itching or a burning sensation develops, get medical attention. Treat for frostbite if necessary.
Inhalation:	Remove victim to fresh air. If cough or other respiratory symptoms occur, consult medical personnel. If not breathing, give artificial respiration, preferably mouth-to-mouth. If breathing is difficult, give oxygen. Consult medical personnel.
Ingestion:	None needed.

5. FIRE-FIGHTING MEASURES

Non-flammable gas. Use agent appropriate to surrounding material.

Though gas cylinders are equipped with pressure and temperature relief devices, they should be removed from high temperature areas or fires, if safe to do so, to avoid risk of rupture.

There are NO extinguishing media which must not be used for safety reasons.

NO special protective equipment is needed for fire-fighters. Wear protective equipment appropriate for the fire conditions.

6. ACCIDENTAL RELEASE MEASURES

For personal protection: Prevent direct skin and eye contact, see Heading 8.

Clean up: This substance will vaporize into the atmosphere, see Heading 13.

Carbon dioxide is a global warming gas.

7. HANDLING AND STORAGE

7.1. Handling

Care should be taken in handling all chemical substances and preparations.

Secure to prevent falling. Do not move without safety cap in place to prevent damage to valve.

See incompatibility information in Heading 10.

7.2. Storage

Store cylinders with restraints to prevent possibility of rupture. Store as a compressed gas in DOT-approved vessels. Keep safety cap in place while in storage.

See incompatibility information in Heading 10.

Store in original container. Keep tightly closed until used.

Carbon Dioxide is a global warming gas.

7.3. Specific use

The intended or recommended use of this preparation is to discharge a FIRE EXTINGUISHING AGENT.

8. EXPOSURE CONTROLS/PERSONAL PROTECTION

8.1. Exposure limit values

Limit Values for Exposure:

Nitrogen:	None established.	
Argon:	None established.	
Carbon dioxide:	OSHA PEL:	5,000 ppm, (9,000 mg/m^3).
	ACGIH TLV-TWA:	5,000 ppm, (9,000 mg/m^3).
	ACGIH TLV-STEL:	30,000 ppm, (54,000 mg/m^3).
	IDLH (Immediately Dangerous for Life and Health):	50,000 ppm.

8.2. Exposure controls

8.2.1. Occupational exposure controls

8.2.1.1. Respiratory protection

Exposure to high concentrations requires the use of self-contained breathing apparatus. Other respirators will not protect in an oxygen deficient atmosphere.

8.2.1.2. Hand protection

Use leather gloves when handling cylinders.

8.2.1.3. Eye protection

Use safety glasses with side shields or safety goggles.

8.2.1.4. Skin protection

No special equipment is needed.

8.2.2. Environmental exposure controls

None needed. The components of this product are normal atmospheric gases.

9. PHYSICAL AND CHEMICAL PROPERTIES

9.1. General information

Appearance:	Colorless gas.
Odor:	None.

9.2. Important health, safety, and environmental information

Distributed by SIRINA
An authorized ANSUL
Distributor

pH:	7 (at 25 °C).
Boiling point/boiling range:	–320 °C.
Flash point:	None to boiling.
Flammability (solid/gas):	Not flammable.
Explosive properties:	Not explosive.
Oxidizing properties:	Not an oxidizer.
Vapor Pressure:	2205 psi @ 70 °F. (21.1 °C)
Relative Density (Water = 1):	0.084 lbs/ft^3.
Solubility:	
– Water solubility:	Carbon dioxide: 88 ml per 100 ml @ 20 °C. Nitrogen: Insoluble. Argon: Insoluble.
– Fat solubility:	Not soluble.
Partition coefficient, n-octanol/water:	Not determined.
Viscosity:	Not determined.
Vapor density (Air = 1):	1.0.
Evaporation rate (Butyl acetate = 1):	< 1, water only evaporates.

9.3. Other information

Auto-ignition temperature:	Does not ignite.

10. STABILITY AND REACTIVITY

10.1. Conditions to avoid

Extremely high temperatures, as in a fire may cause a cylinder to fail.

There are NO known conditions such as temperature, pressure, light, shock, etc., which may cause a dangerous reaction.

10.2. Materials to avoid

Because of Carbon Dioxide: (Al + Na_2O_2), (Mg + Na_2O), Cs_2O, Li, K, $Mg(C_2H_5)_2$, KC2H, Na, NaK, and Ti.

10.3. Hazardous decomposition products

Normally stable.

Hazardous polymerization will NOT occur.

There are no hazardous combustion or decomposition products.

11. TOXICOLOGICAL INFORMATION

Carbon dioxide:

Inhalation LC_{LO} (human) = 100,000 ppm/min.

Can cause suffocation by reducing oxygen available for breathing. Breathing very high concentrations of vapor can cause dizziness, shortness of breath, unconsciousness, or even death.

12. ECOLOGICAL INFORMATION

12.1. Ecotoxicity

This preparation consists of normal atmospheric gases.

12.2. Mobility

This preparation consists of normal atmospheric gases.

Distributed by SIRINA
An authorized ANSUL
Distributor

12.3. Persistence and degradability

This preparation consists of normal atmospheric gases.

12.4. Bioaccumulative potential

This preparation consists of normal atmospheric gases.

12.5. Other adverse effects

Ozone depletion potential:	None.
Photochemical ozone creation potential:	None.
Global warming potential:	Carbon dioxide is a global warming gas.

13. DISPOSAL CONSIDERATIONS

Carbon dioxide is a global warming gas.

This preparation consists of normal atmospheric gases.

14. TRANSPORT INFORMATION

Hazard Class or Division:	Compressed Gas N.O.S. (Mixture of compressed nitrogen, argon, and carbon dioxide), Class 2.2, UN1956.
Label:	Nonflammable gas.

Emergency response guide page number: 126; EMS (Intl): 2-04.

For additional transport information, contact Ansul Incorporated.

Carbon dioxide is a global warming gas.

15. REGULATORY INFORMATION

EU Classification:		Nonflammable gas.
R Phrases:		None.
S Phrases:	9	Keep container in a well ventilated place.
Exposure Limit Values:		
Nitrogen:		None established.
Argon:		None established.
Carbon dioxide:	OSHA PEL:	5,000 ppm, (9,000 mg/m^3).
	ACGIH TLV-TWA:	5,000 ppm, (9,000 mg/m^3).
	ACGIH TLV-STEL:	30,000 ppm, (54,000 mg/m^3).
	IDLH (Immediately Dangerous for Life and Health):	50,000 ppm.
EINECS Status:	All components are included in EINECS inventories or are exempt from listing.	
EPA TSCA Status		All components are included in TSCA inventories or are exempt from listing.
Canadian DSL (Domestic Substances List):		All components are included in the DSL or are exempt from listing.
Environmental restrictions:		None are known.
Restrictions on Marketing and Use:		None are known.

Refer to any other national measures that may be relevant.

16. OTHER INFORMATION

(HMIS) HAZARDOUS MATERIAL IDENTIFICATION SYSTEM RATINGS:

HEALTH:	1	4. Severe Hazard
FLAMMABILITY:	0	3. Serious Hazard
REACTIVITY:	0	2. Moderate Hazard
		1. Slight Hazard
		0. Minimal Hazard

(WHMIS) CANADIAN WORKPLACE HAZARDOUS MATERIAL IDENTIFICATION SYSTEM RATINGS:

This product is rated: **A Compressed Gas.**

Format is from directive 2001/58/EC.
EINECS data is from http://ecb.jrc.it/existing-chemicals/
Data used to compile the data sheet is from Ansul Material Safety Data Sheet, February, 2002.
Toxicological information added from the EINECS ESIS (Existing Substances Information System).
A rating under WHMIS has been added, following the Canadian guidelines.

17. DISCLAIMER

THE ABOVE INFORMATION IS BELIEVED TO BE CORRECT, BUT DOES NOT PURPORT TO BE ALL INCLUSIVE AND SHALL BE USED ONLY AS A GUIDE. ANSUL SHALL NOT BE HELD LIABLE FOR ANY DAMAGE RESULTING FROM HANDLING OR FROM CONTACT WITH THE ABOVE PRODUCT.

Distributed by SIRINA
An authorized ANSUL
Distributor

MSDS available at http://www.ansul.com

ANSUL and INERGEN are trademarks of Ansul Incorporated or its affiliates.

General Information

INERGEN® AGENT

INERGEN is a plentiful, non-corrosive gas that does not support combustion nor react with most substances. INERGEN agent contains only naturally-occurring gases which have no impact on the ozone or the environment in general. INERGEN agent is a mixture of three inerting (oxygen diluting) gases: 52% nitrogen, 40% argon, and 8% carbon dioxide (see MSDS in Appendix Section). INERGEN extinguishes fire by lowering the oxygen content below the level that supports combustion. When INERGEN agent is discharged into a room, it introduces the proper mixture of gases that allow a person to breathe in a reduced oxygen atmosphere. It actually enhances the body's ability to accumulate oxygen. The normal atmosphere in a room contains approximately 21% oxygen and less than 1% carbon dioxide. If the oxygen content is reduced below 15%, most ordinary combustibles will not burn. INERGEN agent will reduce the oxygen content to approximately 12.5% while increasing the carbon dioxide content to about approximately 3%. The increase in the carbon dioxide content increases a person's respiration rate and the body's ability to absorb oxygen. Simply stated, the human body is stimulated by the carbon dioxide to breathe more deeply and rapidly to compensate for the lower oxygen content of the atmosphere.

PERSONAL SAFETY

Proper INERGEN system design requires that the design concentrations fall within a design window that limits the upper and lower requirements of both oxygen and carbon dioxide. INERGEN agent has acceptable toxicity for use in occupied spaces when used as specified in the United States Environmental Protection Agency (EPA) proposed Significant New Alternative Policy (SNAP) program rules and NFPA 2001, "Clean Agent Fire Extinguishing Systems." When design concentrations are in this window, no adverse affects will take place on the human respiratory system. Any exposure outside of these limits requires the use of self-contained breathing apparatus. Respirators will not function in oxygen deficient atmospheres. Because of the decomposed products of combustion generated during an actual fire and extinguishment, it is a good safety rule to ventilate the hazard for at least 15 minutes before entering or if entry is required sooner, wear an approved self-contained breathing apparatus.

Refer to NFPA 2001, 2000 edition, Paragraph 1-6.1.3, "Inert Gas Clean Agents," for detailed exposure conditions.

HMIS 1-0-0/very cold discharge. Contents under high pressure. Avoid direct contact of the cold, high pressure discharge and avoid direct inhalation of undiluted gas.

WARNING

AVOID EXPOSURE TO VAPORS, FUMES, AN PRODUCTS OF COMBUSTION.

TYPE OF SYSTEM

Total flooding is the approved type of system available. A total flooding system normally consists of a fixed supply of INERGEN connected to piping with nozzles to direct the agent into an enclosed hazard space. In a total flooding system, the enclosure around the hazard must be tight enough to hold the required percentage of INERGEN concentration for a period of time to extinguish the fire.

TYPES OF ACTUATION

There are three basic types of actuation for the INERGEN systems: pneumatic, mechanical, and electrical.

Electrical

Automatic electrical actuation of the cylinder valve, through an approved control panel, can be accomplished by using an electric actuator for the CV-98 valve. The actuator is energized by an electric signal from the detection/control panel. When using the electric actuator, pneumatic or mechanical actuating devices can also be attached as a secondary means of actuation. When using electric actuation, a means of manual release shall also be provided.

When using the electric actuator, the METRON PROTRACTOR in the actuator must be replaced after system discharge.

NOTE: Electric solenoid actuator (previously used with CV-90 valve) and electric actuator (used with CV-90 and CV-98 valve) CANNOT be wired on the same release circuit.

Mechanical

Mechanical actuation is accomplished by a lever actuator mounted on top of the cylinder valve or other actuators. By rotating the lever on the actuator, either locally or from a remote pull station, the cylinder valve can be opened, allowing the INERGEN to discharge through the piping and nozzles.

Distributed by SIRINA
An authorized ANSUL
Distributor

General Information

TYPES OF ACTUATION (Continued)

Pneumatic

Pneumatic actuation utilizes gas pressure from a cartridge located in a releasing device such as an ANSUL AUTOMAN® II-C release. The gas pressure forces the piston of the pneumatic actuator down, which in turn forces the cylinder valve to open, releasing INERGEN agent from the cylinder, through the piping and out the nozzles.

On a CV-98 valve, a 1/4 in. actuation line is attached to the 1/8 in. port on the side of the valve. Pneumatic pressure, from an ANSUL AUTOMAN II-C or another pilot cylinder, opens the valve through this port.

INERGEN FLOW

The flow of INERGEN in the system discharge piping is a compressible flow. The agent is a compressed gas, the temperature and density of which changes as the pressure in the pipe decreases. The flow calculation is based on classical energy conservation considerations. For simple systems, an assumption of adiabatic expansion of the agent is sufficient. The ANSUL flow calculation program, however, accounts for heat transfer from the pipe into the flowing agent. The consideration of heat input to the agent permits a greater degree of flexibility in system design.

The ANSUL "INERGEN" system uses an orifice at the outlet of the storage cylinder manifold to produce a substantial pressure drop before the INERGEN enters the main distribution pipe network. The prediction of conditions immediately after the orifice is based both on classical theory and empirical data taken by ANSUL.

Discharge nozzles control the amount of INERGEN which flows into various portions of the protected space. The flow through the discharge nozzles is predicted by classical theory enhanced by empirical data developed by ANSUL.

TYPES OF DETECTION

There are two approved types of detection available for the INERGEN system: electronic control panel and electric releasing device.

Electronic Control Panel

Electric actuation of the INERGEN system is obtained through the use of electronic control systems which monitor and control various system functions. All detection equipment must be installed according to NFPA 70 and NFPA 72. Detection devices available are: ionization smoke detectors, photoelectric smoke detectors, flame detectors, and rate compensated heat detectors. **NOTE:** When designing the system, make certain the type of detector used is appropriate for the type of hazard so proper response is attained in a fire situation. When a detector senses a fire, a signal is sent to the control panel. The panel in turn sends an electrical signal to the solenoid actuator located on the pilot cylinder valve. The actuator opens the cylinder valve releasing the INERGEN agent into the manifold. The pressure in the manifold then causes the slave valves to open and discharge INERGEN into the piping network and out the nozzles.

Electric Releasing Device

The ANSUL AUTOMAN II-C electric releasing device uses approved thermal detectors and actuates the INERGEN cylinders pneumatically, utilizing high pressure nitrogen to operate the cylinder valve.

SYSTEM LIMITATIONS

Design Limitations

- Unbalanced systems (protecting multiple hazards) operating temperature range: 60° to 80° F (15° to 27 °C)
- Unbalanced systems (protecting single hazards) operating temperature range: 32° to 130 °F (0° to 543 °C)
- Balanced systems operating temperature range: 32° to 130 °F (0° to 54 °C)
- Hazard temperature: –40° to 200 °F (–40° to 93 °C)
- Spare cylinder storage temperature: 0° to 130 °F (–17° to 54 °C)
- Minimum Design Concentration: 34.2%
- Maximum Design Concentration for Occupied Spaces: 52%
- Nozzle Linear Coverage: 32 ft. x 32 ft. (9.8 m x 9.8 m)
- Maximum nozzle height above floor level for a single row of nozzles is 20 ft. (6.1 m). For ceiling heights over 20 ft. (6.1 m), an additional row of nozzles is required.
- Nozzles to be located a maximum of 12 in. (305 mm) down from the ceiling, positioned vertically down.
- Manifolding: All cylinders on the same manifold must be the same size
- Minimum Ceiling Height: 8 in. (20.3 cm)
- Maximum length between node points in the manifold is 20 ft. (6.1 m).
- Maximum length between the final node point in the manifold and the pressure reducer is 100 ft. (30.5 m).

Distributed by SIRINA
An authorized ANSUL
Distributor

General Information

SYSTEM LIMITATIONS (Continued)

Design Limitations (Continued)

- Length from pressure reducer to first tee must be a minimum of 10 pipe diameters.
- Discharge time for 90% of the agent shall be more than 30 seconds after actuation of the system but not to exceed 160 seconds for UL Listed systems or 120 seconds for FM Approved systems.
- 1/4 in. and 3/8 in. pipe is allowed in Schedule 40 only. Schedule 80 or 160 is not allowed in these pipe sizes.
- The maximum allowed split % of INERGEN agent through a tee is 95%:5%.

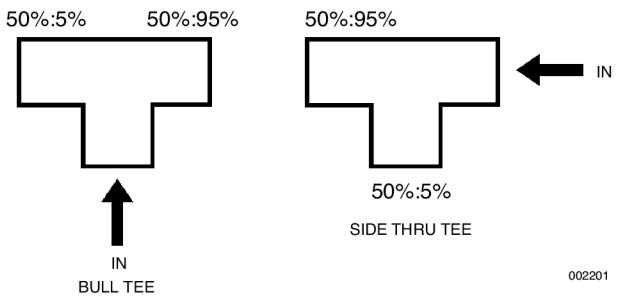

- On a side/thru tee, the side outlet must always be the smallest of the two splits.

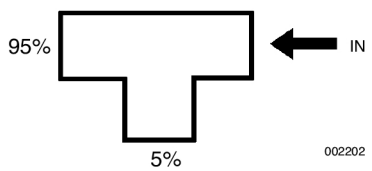

- Other than what is stated previously, there are no orientation or critical length requirements necessary for tee arrangements.

Flow Calculation Limitations

- Minimum Nozzle Pressure Pressure: 325 psi (2240 kPa)
- Maximum Pipe Volume vs. Cylinder Volume: 66%
- For unbalanced systems, UL/ULC ratio of nozzle orifice diameter to pipe diameter shall be a minimum of 11.5% to a maximum of 70%. FM ratio shall be a minimum of 15% to a maximum of 60%.
- For balanced systems, UL/ULC and FM ratio of nozzle orifice diameter to pipe diameter shall be a minimum of 7% to a maximum of 80%.
- For unbalanced systems, UL/ULC ratio of pressure reducer orifice to inlet pipe diameter shall be a minimum of 13% to a maximum of 55%. FM ratio shall be a minimum of 15% to a maximum of 55%.
- For balanced systems, UL/ULC and FM ratio of pressure reducer orifice to inlet pipe diameter shall be a minimum of 7% to a maximum of 80%.
- In an unbalanced piping system, the time lag in reaching peak pressure at the various nozzles in the system may vary. If the variation is beyond certain programmed limits, an error message is generated indicating that the time to reach pressure at one or more nozzles is too long. This condition may result if the length of pipe leading to a nozzle is extremely long compared to the length of pipe leading to one or more other nozzles in the system.
- For unbalanced systems, the INERGEN Designer 2.1.2 Computer Design Program, Part No. 431025, is the only calculation method to be used with Ansul Engineered INERGEN systems.
- Balanced INERGEN systems can be calculated using the INERGEN Designer – Balanced 1.3.0 flow calculation program.
- The INERGEN Designer 2.1.2 Computer Design Program is designed for a +70 °F (+21 °C) cylinder operating/storage temperature. Therefore, the cylinder operating/storage temperature must be in the range of +60 °F to +80 °F (+15.5 °C to 26.7 °C) for a single unbalanced system protecting two or more separate hazards. If the cylinder operating/storage temperature is outside this range, an insufficient or excessive quantity of agent may be discharged from one or more discharge nozzles. If cylinders cannot be stored within this range, then each hazard must be protected with its own individual system.
- Maximum and minimum flow rates per table. (**NOTE:** Table entries are rounded to the nearest whole numbers. Computer calculation uses same data in equation form – therefore there may be slight (1 scfm or less) differences in the minimum and maximum values on the computer printout.) This table is for general use only. It can be used for evaluation of a completed flow calculation.
- The calculation method has been designed for specific types of fittings, pipe, and pipe inside diameter. When these limitations are not maintained, there is a risk that the system will not supply the required quantity of extinguishing agent.

Distributed by SIRINA
An authorized ANSUL
Distributor

General Information

SYSTEM LIMITATIONS (Continued)

Flow Calculation Limitations (Continued)

- Maximum elevation difference in pipe runs:
  - Statement No. 1. If nozzles are only located **above** the tank outlet, then the maximum elevation difference between the tank outlet and the furthest horizontal pipe run or discharge nozzle (whichever is furthest) shall not exceed 100 ft. (30.5 m). See Figure 1.
  - Statement No. 2. If nozzles are only located **below** the container outlet, then the maximum elevation difference between the tank outlet and the furthest horizontal pipe run or discharge nozzle (whichever is furthest) shall not exceed 100 ft. (30.5 m). See Figure 1.
  - Statement No. 3. If nozzles are located both **above and below** the tank outlet, then the maximum elevation difference between the furthest horizontal pipe runs or discharge nozzles (whichever is furthest) shall not exceed 100 ft. (30.5 m). See Figure 1.

Note: If a system design violates these limits, contact Ansul to determine what action has to be taken.

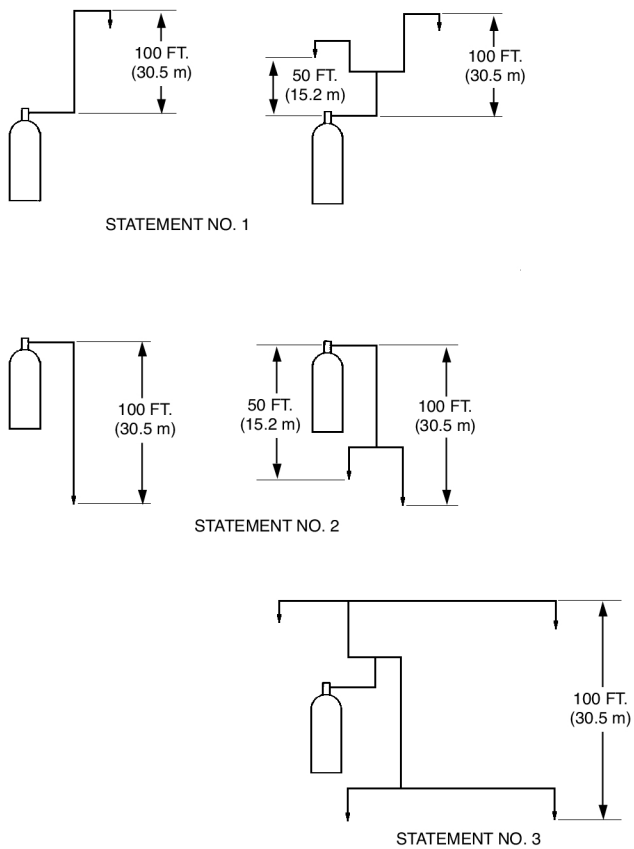

FIGURE 1
006050

TABLE OF MINIMUM AND MAXIMUM FLOW RATES

Pipe Size	Minimum Flow Rate (SCFM)	Maximum Flow Rate (SCFM)
1/4 SCH 40	31	185
3/8 SCH 40	58	348
1/2 SCH 40	99	591
3/4 SCH 40	189	1136
1 SCH 40	331	1985
1 1/4 SCH 40	619	3712
1 1/2 SCH 40	877	5260
2 SCH 40	1536	9217
2 1/2 SCH 40	2285	13712
3 SCH 40	3712	22269
4 SCH 40	6820	40920
5 SCH 40	11354	68123
6 SCH 40	17248	103486
8 SCH 40	32487	194922
1/2 SCH 80	73	438
3/4 SCH 80	148	891
1 SCH 80	268	1607
1 1/4 SCH 80	520	3118
1 1/2 SCH 80	747	4484
2 SCH 80	1331	7988
2 1/2 SCH 80	1994	11967
3 SCH 80	3273	19637
4 SCH 80	6083	36498
5 SCH 80	10197	61184
6 SCH 80	15337	92021
8 SCH 80	29218	175311
1/2 SCH 160	51	307
3/4 SCH 160	95	570
1 SCH 160	185	1108
1 1/4 SCH 160	417	2500
1 1/2 SCH 160	577	3461
2 SCH 160	974	5843
2 1/2 SCH 160	1634	9806
3 SCH 160	2618	15708
4 SCH 160	4787	28724
5 SCH 160	7962	47773
6 SCH 160	12080	72482
8 SCH 160	22523	135139

Planning

Planning for design and installation for an INERGEN® system should start when the customer is first contacted in regards to protecting his hazard with INERGEN. Most of the information gathered for the design of a system is collected during the first meeting with the customer. The information gathered at this point will determine the ease or difficulty of the rest of the project. One of the key elements for fire protection is to correctly define the hazard and conduct a complete survey to determine if the system will properly protect the hazard. Coordination with all parties involved in the project will further improve the flow of the overall project.

A thorough hazard analysis is required to determine the protection required. It is important to cover each element and accurately record the information. This information will be used to determine the size and location of the INERGEN system required and also to determine at a later date if any changes were made to the hazard after the system was installed. Information necessary for design of an INERGEN system is listed in the following paragraphs.

A Proposal Information Form, F-9355, is included in the appendix of this manual to assist in a hazard analysis of the protected areas.

Initial General Information:

- Are Specifications available? If so obtain a copy.
- Who is the “Authority Having Jurisdiction”? the owner?
- Will the system need to be approved by any other regulatory or insurance agencies?
- Will any special requirements apply to the system design or installation?

Hazard Information:

- Secure the general arrangement drawings of the areas to be protected.
- If the general arrangement drawings do not include the following information then you must obtain it.
- Record **all** dimensions for the hazard areas such as length, width, ceiling height, angles of corners if not 90 degrees, etc.
- Draw a sketch including plan and elevation views of the hazard area if drawings are not available.
- Indicate the quantity and locations of all exits from the hazard on the sketches.
- Record all dimensions for any structural objects such as beams or columns, built in cabinets, ducts, etc. which may allow a reduction of the hazard volume.
- Identify anything unique about the hazard that would affect system design or installation.
- Identify the hazards normal, maximum, and minimum ambient temperatures.
- Will the hazard area be normally occupied?
- Identify any openings, or potential openings in the hazard enclosure that may cause loss of agent during or after discharge.
- If possible, determine the maximum strength of the weakest wall, floor, or ceiling. This information will be used to calculate venting requirements. If this information is not available, a conservative number will be used to calculate the required free venting area. This conservative number will probably increase the size of venting required.

Planning

INERGEN Supply Requirements:

- Will the cylinders be located in a dedicated space? If so, record dimensions of that space.
- ► If the system is unbalanced, is the operating temperature range within 60° to 80° F (15° to 27° C)?
- ► If the system is balanced, is the operating temperature range within 32° to 130° F (0° to 54° C)?
- Determine if the floor will support the cylinders and bracketing. Assume 275 lbs/ft^2 for this requirement.
- Will the cylinder bracketing be secured to a wall? If so, is the wall strong enough to support it and the cylinders?
- Will Uprights be required for the bracketing?
- Will Manifold Supports be required to support the manifold?
- Will a reserve supply of agent be required? If so will it need to be connected to the manifold?
- Will a discharge test be required?

Actuation and Alarm Requirements:

- Will the system be actuated automatically as well as manually?
- What type of manual actuation (cable pull or pneumatic) is required?
- Will multiple areas be protected by a single system? If so, will the areas be protected separately or simultaneously?
- Identify the locations for all Manual Pull Stations.
- If automatic detection is a part of the system, provide ceiling details.
- What types of alarm devices are required; audible and/or visible?
- Where will the system actuation be annunciated?
- Does the hazard area require explosion-proof or weather-proof wiring and devices?
- What devices need to be shut down or started up? Identify the number of contacts required.

Piping and Wiring Information:

- Determine the cylinder location.
- Identify preferred supply piping routes.
- Indicate any obstructions to the piping or wiring runs.
- If the system includes Selector Valves, indicate their location.

Ventilation and Leakage Concerns:

- Identify any unclosable openings regardless of their size.
- Advise the customer of the possible need to seal these openings to prevent agent loss.
- Advise the customer of the possible need to provide pressure venting during discharge.
- Determine the route venting will need to take to reach outside atmosphere. Consult the INERGEN Pressure Relief Venting Guide, Part No. 422793, for definition of outside atmosphere.
- Will the venting route involve venting through other enclosures or ducts? If so, provide details about the rooms or duct routing information.
- If the venting will be through other enclosures, will they be protected also? If so, will they be protected separately or simultaneously?
- Will dampers be required for Inlet or Exhaust ducts? If so, how will they be operated, electrically or pneumatically?

Distributed by SIRINA
An authorized ANSUL
Distributor

After completing the hazard analysis sub-section in Section IV Planning, proceed with the following elements to work up a complete design and bill of materials. An example is included with each step to help the reader to understand the procedure. The example uses a computer room and subfloor as shown below.

APPLICATION METHOD

Total flooding is the only approved application method for INERGEN® systems. INERGEN agent is stored and discharged as a gas; it does not create a liquid stream, therefore, local application of INERGEN agent is not possible because the flow of gas cannot be accurately predicted once it exits the nozzles.

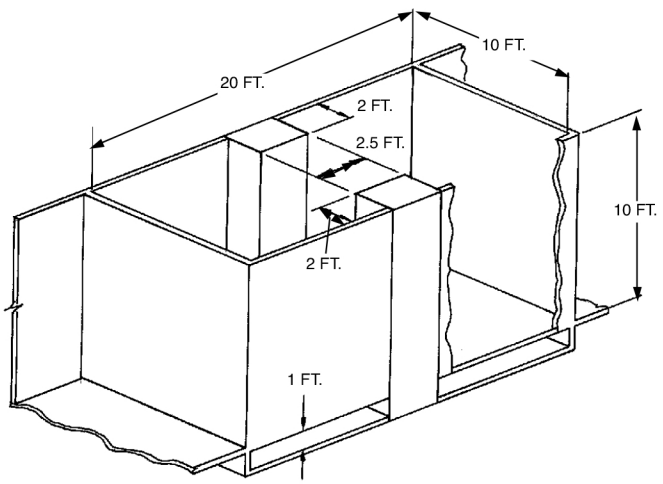

FIGURE 1
002203

Total Flooding

The following steps must be followed, in the order they are presented, to properly design an INERGEN total flooding system. A simple design example will be used throughout the steps to help understand each step. Use the Design Calculations Worksheet on Page 5-9 in this section.

STEP NO. 1 – Determine hazard volume(s)

The first step in the design of an INERGEN system is to calculate the volume of each area to be protected. Multiply the length times the width to determine the area, and then multiply the area times the height to determine the volume for each hazard area. If any area is an odd shape, the designer may need to divide it up into regular shapes that will allow volume calculations, and then total all of the volumes together to determine the actual volume of that area. If the irregular shape will affect distribution of agent, it may be best to calculate sections of the hazard as separate areas and include nozzles for each of these areas.

If the ceiling height exceeds the maximum allowable ceiling height as defined in the General Information Section of this manual, multiple levels of nozzles must be designed into the system. In this case, it is usually beneficial to treat each level as a separate protected area so that proper agent distribution is achieved.

Complete this step for each area protected by the system.

Example:

- Computer Room
  - 20 ft. 0 in. L x 10 ft. 0 in. W = 200 ft^2, x 10 ft. 0 in. H = 2,000 ft^3
- Subfloor
  - 20 ft. 0 in. L x 10 ft. 0 in. W = 200 ft^2, x 1 ft. 0 in. H = 200 ft^3

STEP NO. 2 – Determine volume of solid, permanent structures, or equipment

The volume of solid objects in each hazard area that are not removable can be deducted from the volume of the hazard. This volume may include columns, beams, cut-out room sections, closets that will always be closed, ducts that pass completely through the area without any openings, and any other large, permanently fixed objects that cannot be removed from the hazard enclosure.

Calculate the volume of all such objects and add them together to determine the amount of space to be deducted from the volume.

Complete this step for each enclosure protected by the system.

Distributed by SIRINA
An authorized ANSUL
Distributor

Design

APPLICATION METHOD (Continued)

Total Flooding (Continued)

Example

Computer Room:

- Columns: 2 ft. 6 in. L x 2 ft. 0 in. W = 5 ft^2, x 10 ft. 0 in. H = 50 ft^3 x 2 Columns = 100 ft^3

Subfloor:

- Columns: 2 ft. 6 in. L x 2 ft. 0 in. W = 5 ft^2, x 1 ft. 0 in. H = 5 ft^3 x 2 Columns = 10 ft^3

STEP NO. 3 – Calculate Reduced Volume

Subtract the volume of solid, permanent objects (Step No. 2) from each of the hazard's volumes (Step No. 1). The result is considered to be the Reduced Volume for the enclosure.

Volume – Solid Object Volume = Reduced Volume

Complete this step for each area protected by the system.

Example

Computer Room:

- 2,000 ft^3 – 100 ft^3 = 1,900 ft^3

Subfloor:

- 200 ft^3 – 10 ft^3 = 190 ft^3

STEP NO. 4 – Determine minimum design concentration

Minimum Design Concentration is defined by NFPA 2001 as the Extinguishing Concentration for the specific fuel plus a 20% safety factor. Extinguishing Concentration is the agent concentration required to extinguish a test fire.

The Minimum Design Concentration for various fuels is shown in the following table:

INERGEN Minimum Design Concentrations

Class A Surface Fuels	34.2%
Class B Fuels	Heptane 40.7%*
Class C Fuels	34.2%

* Contact Ansul Technical Services Department for Minimum Design Concentrations for other Class B fuels.

Class A, B (contact Ansul for types), and C hazards are UL listed and FM approved for INERGEN systems.

Complete this step for each area protected by the system.

Design Concentrations are determined by NFPA 2001, 2000 edition, Paragraph 3-4.2 and UL-2127, first edition, Paragraph 59.2(b):

INERGEN cupburner value is 31% for commercial grade Heptane

Nozzle distribution test concentration = 31.25%

Calculations:

Cupburner or fire test concentration x nozzle efficiency factor x safety factor

Nozzle efficiency factor = $\frac{31.25}{31.0}$ = 1.008

Safety Factor: Class A = 1.2
Class B = 1.3
Class C = Class A

For Class A (determine by fire test) – 28.24% x 1.008 x 1.2 = 34.2%

For Class B (commercial grade heptane) – 31.25% x 1.3 = 40.7%

For Class B (other Class B fuels) – cupburner x 1.008 x 1.3 = design concentration

For Class C = Class A

For systems with only manual actuation – cupburner or fire test concentration x 1.008 x 1.3 = design concentration

STEP NO. 5 – Determine minimum quantity of INERGEN agent required

This step is used to determine the minimum amount of INERGEN agent required to protect each hazard area. The amount of agent calculated during this step is the minimum amount of agent that is required to protect the hazard area. The amount of agent in the system must always be at least this much and may be exceeded. Failure to supply at least the amount of agent indicated in this step may prevent the system from suppressing a fire.

To determine the minimum quantity of INERGEN agent required, determine the lowest anticipated ambient temperature for the area being protected and determine the design concentration required for the material to be extinguished. Minimum Ambient Temperature is defined as the lowest anticipated temperature in the enclosure during normal conditions and is usually determined by the environmental conditions or the air handling system. This temperature is used in the design because it is the "worst case," meaning that it will require the highest amount of agent.

Distributed by SIRINA
An authorized ANSUL
Distributor

APPLICATION METHOD (Continued)

Total Flooding (Continued)

Using these two variables, the INERGEN agent flooding factor can be calculated in either of two ways:

First: The formula in NFPA 2001 can be used.

$$X = 2.303 \left[\frac{V_S}{S} \right] \text{Log}_{10} \left[\frac{100}{100\text{-}C} \right]$$

X = INERGEN agent flooding factor

S = 9.8579 + 0.02143 (T)

T = minimum anticipated temperature in the protected volume (°F)

C = INERGEN concentration, % by volume

V_S = Specific volume at 70 °F (cu.ft./lb.) = 11.358 cu. ft./lb.

NOTE: This calculation includes an allowance for the normal leakage (efflux) from a "tight" enclosure due to agent expansion.

The second option for calculating the required quantity of INERGEN agent is to refer to the "Flooding Factor Chart" on Page 5-10 in to determine the correct flooding factor to use. To do this, start by locating the Minimum Ambient Temperature in the left column, follow this line across until you reach the column for the Minimum Design Concentration needed for the design. The number listed where the temperature line and the concentration column meet is the Flooding Factor to be used. **NOTE:** If the minimum temperature, the minimum design concentration, or both are not listed, interpolation will be required.

Next, to determine the quantity of INERGEN agent, multiply the Reduced Hazard Volume by the Flooding Factor determined from the table.

Complete this step for each area protected by the system.

NOTICE

The actual design concentration of INERGEN agent cannot be less than the concentration selected in Step No. 4.

Example

Minimum Ambient Temperature = 60 °F.

Flooding Factor = 0.427

Computer Room

- 1,900 ft^3 x 0.427 = 810.7 ft^3 INERGEN Agent Required

Subfloor

- 190 ft^3 x 0.427 = 81.1 ft^3 INERGEN Agent Required

Step No. 6 – Adjust Quantity of Agent with Altitude Correction Factor

It may be necessary at this point to adjust the required initial INERGEN agent quantity for altitude effects. An increase in altitude or pressure causes a gas to expand and occupy more space, which will lead to a higher concentration if the agent quantity is not reduced accordingly. A decrease in altitude will cause the opposite effect, increasing the quantity of agent required. This same effect will apply to increases or decreases in the ambient pressure as could be caused by ventilation systems designed to maintain a positive or negative pressure within the enclosure. To apply the proper adjustment, first look up the altitude or pressure of the hazard on the "Atmospheric Correction Factors Chart" on Page 5-12 in this section.

Determine the total INERGEN agent required by multiplying the initial INERGEN quantity by the Altitude Correction Factor. If the altitude is between 3000 ft. below seal level and 3000 ft. above sea level, use of the altitude correction factor is optional. Interpolation of the table may be necessary if the actual altitude or pressure is not listed.

Example

The hazard altitude is 4000 feet. Referring to the chart on Page 5-12, the altitude correction factor of 4000 ft. is 0.85.

Computer Room

- 810.7 ft^3 INERGEN Agent x 0.85 = 689.1 ft^3 Required Agent

Subfloor

- 81.1 ft^3 INERGEN Agent x 0.85 = 68.9 ft^3 Required Agent

Design

APPLICATION METHOD (Continued)

Total Flooding (Continued)

STEP NO. 7 – Determine the total system INERGEN agent quantity required

Add quantities from all areas to determine the minimum total agent quantity required for the entire system.

Example

689.1 ft^3 + 68.9 ft^3 = 758.0 ft^3 Total Agent Required

STEP NO. 8 – Determine number of INERGEN cylinders required

To determine the number of cylinders required, divide the quantity of INERGEN agent for the entire system by the actual cylinder capacity and then round up to the next whole number. **NOTE:** The INERGEN cylinder size listed on the Component Sheet is a nominal cylinder size. The quantity entered into the calculation should be the Minimum Fill Quantity in the Cylinder. Refer to the table below for exact quantities.

NOTE: When manifolding cylinders, all cylinders on the manifold must be the same size.

Nominal Cylinder Size	Actual INERGEN Agent Quantity
200 cu. ft.	205 cu. ft.
250 cu. ft.	266 cu. ft.
350 cu. ft.	355 cu. ft.
425 cu. ft	429 cu. ft.
435 cu. ft.	439 cu. ft.

Example

758.0 ft^3 Total Agent Required ÷ 439 ft^3 Cylinder Size = 1.73 = 2 cylinders Required

STEP NO. 9 – Calculate the actual quantity of INERGEN agent supplied

To calculate the Actual Quantity of INERGEN agent supplied, multiply the actual capacity of the INERGEN cylinders chosen by the quantity of cylinders determined in Step No. 8. The result **must be higher** than the required amount determined in Step No. 7.

⚠ CAUTION

If the INERGEN agent supplied quantity is close to the INERGEN agent required quantity and multiple areas are to be protected the designer may wish to add an additional cylinder to allow enough agent for adjusting of nozzle agent quantities to achieve proper concentrations in all areas.

Example

439 ft^3 x 2 = 878 ft^3 INERGEN Agent Supplied

STEP NO. 10 – Calculate the actual INERGEN agent supplied per area

This step is required to split the extra agent evenly between the areas so that they all achieve the same concentration instead of over-concentrating some and under-concentrating others. The calculation is a simple percentage calculation where the area minimum agent quantity is divided by the system minimum agent quantity to determine the percent required for the area in question. Once the percentage is determined, it is applied to the total supplied agent quantity to determine how much of the supplied quantity is to be applied to the area in question.

The formula for determining the actual INERGEN agent quantity supplied per area being protected is:

(Minimum quantity of agent required for the area in question (from Step No. 6) ÷ the total minimum quantity required for all areas (from Step No. 7)) x the actual quantity of agent supplied (from Step No. 9.)

Complete this step for each area protected by the system.

Distributed by SIRINA
An authorized ANSUL
Distributor

Distributed by SIRINA
An authorized ANSUL
Distributor

APPLICATION METHOD (Continued)

Total Flooding (Continued)

Example

Computer Room

- (689.1 ft^3 Required Agent Per Area ÷ 758.0 ft^3 Total Agent Required) x 878 lb. Quantity of Agent Supplied = 798 ft^3 Actual Agent Supplied Per Area

Subfloor

- (68.9 ft^3 Required Agent Per Area ÷ 758.0 ft^3 Total Agent Required) x 878 lb. Quantity of Agent Supplied = 80 ft^3 Actual Agent Supplied Per Area

STEP NO. 11 – Determine actual INERGEN agent flooding factor

This step is necessary to determine the Concentration that the supplied quantity of agent will produce in the protected area as opposed to the Design Concentration. This is required to assure that any of the areas will not be over-concentrated with agent.

To determine the actual INERGEN agent flooding factor (this is necessary to complete Step No. 12), divide the "INERGEN Agent supplied" for each area (from Step No. 10) by the Altitude Correction Factor (from Step 6) and divide the result by the Reduced volume of that hazard area (from Step No. 3).

NOTE: If all areas use the same "Minimum Design Concentration" in Step No. 4, the Flooding Factors determined in this step should match for all areas. If this is not the case, a calculation mistake has been made. Review the previous calculations carefully to correct it before proceeding.

Complete this step for each area protected by the system.

Example

Computer Room

- (798 ft^3 Actual Agent Supplied Per Area ÷ 0.85 Altitude Correction Factor) ÷ 1,900 ft^3 Reduced Volume = .494 Actual INERGEN Agent Flooding Factor

Subfloor

- (80 ft^3 Actual Agent Supplied Per Area ÷ 0.85 Altitude Correction Factor) ÷ 190 ft^3 Reduced Volume = .495 Actual INERGEN Agent Flooding Factor

STEP NO. 12 – Determine the Design Concentration at the Maximum Ambient Temperature for Each Area

This step determines the Design Concentration of INERGEN agent in each protected area using the Reduced Volume and the supplied quantity of agent for the area at the "Maximum Ambient Temperature". It is necessary to assure that we do not over-concentrate the area due to the additional agent actually supplied to the area and the increased volume of agent caused by increased temperature.

To complete this step, refer to the Flooding Factor Chart on page 5-11. Start by locating the Maximum Ambient Temperature in the left column; follow this line across until you find the Flooding Factor determined in Step No. 11. Follow that column up to read the design concentration at maximum temperature. **NOTE:** If the maximum temperature, the Flooding Factor, the Design Concentration, or any combination of these items, are not listed, interpolation will be required.

Complete this step for each area protected by the system.

Example

Maximum Ambient Temperature = 80 °F
Flooding Factor = .494
Design Concentration = 39.5%

Distributed by SIRINA
An authorized ANSUL
Distributor

Design

APPLICATION METHOD (Continued)

Total Flooding (Continued)

STEP NO. 13 – Verify that the actual INERGEN agent concentration is within the design concentration range of 34.2% to 52%

This step is used to verify that the "worst case" design concentration will not exceed limits for fire suppression on the low end and life safety on the high end. 34.2% INERGEN concentration relates to 13.8% oxygen concentration and 2.7% carbon dioxide concentration in a protected area, this is the minimum amount of INERGEN agent required for fire suppression of most fuels. This minimum concentration of INERGEN agent must be met in all cases. Failure to achieve this concentration may prevent suppression of a fire! 52% INERGEN concentration relates to 10.0% oxygen concentration and 4.2% carbon dioxide concentration in a protected space. This is the maximum amount of INERGEN agent allowed for normally occupied areas.

NOTE: Normally occupied space is defined as "One that is intended for occupancy" by NFPA 2001. The appendix of NFPA 2001 states "Spaces occasionally visited by personnel, such as transformer bays, switch-houses, pump rooms, vaults, engine test stands, cable trays, tunnels, microwave relay stations, flammable liquid storage areas, enclosed energy systems, etc., are examples of areas **considered not normally occupied."**

NOTE: Concentration may be between 52% to 62% in normally non-occupied areas if evacuation of these areas can be accomplished to limit exposure to less than 30 seconds.

Refer to NFPA 2001, Paragraph 1-6.1.3, for detailed exposure conditions.

Complete this step for each area protected by the system.

Example

39.5% < 52%, therefore the system design is acceptable!

STEP NO. 14 – Determine the Design Concentration at Normal Ambient Temperature

Complete the same procedure as done in Step No. 12 using the Normal Ambient Temperature instead of the Maximum Ambient Temperature.

Complete this step for each area protected by the system.

Example

Normal Ambient Temperature = 70 °F.
Flooding Factor = .494
Design Concentration for all areas = 39%

STEP NO. 15 – Determine the 90% system discharge time

This step is used to determine the discharge time for 90% of the agent. 90% of the agent is used by the flow calculation program instead of 100% because it provides a more accurate flow calculation due to the low pressures and flow rates associated with the final 10% of the agent discharge. **NOTE:** In most cases 90% of the agent will discharge from the system during the first half of the discharge time, the remaining 10% of agent will require approximately the same amount of time to discharge as the first 90%.

The discharge time established in this step will assure that the agent concentration reaches 95% of the Minimum Design Concentration within 60 seconds as required by NFPA 2001. Varying the discharge time based on Design Concentration at Normal Ambient Temperature allows design of a system with lower flow rates and smaller pipe sizes because the extra agent (the amount over that necessary to reach 95% of Minimum Design Concentration) is discharged after 60 seconds.

To complete this step, refer to the Discharge Time Chart on Page 5-13 in this section. Locate the Design Concentration determined in Step No. 14 in the left column and read to the right to determine the Discharge Time. Interpolation of the Design Concentration and Discharge Time may be necessary.

Underwriters Laboratories limits the 90% discharge time of unbalanced INERGEN systems to 160 seconds while FM limits the discharge time to 120 seconds. If the time determined from the Discharge Time Chart on Page 5-13 exceeds these limits, and the system must be UL listed or FM approved, the discharge time must be determined as either 120 seconds (FM) or 160 seconds (UL).

Complete this step for each area protected by the system.

NOTE: Utilization of these discharge times is necessary to achieve 95% of the minimum design concentration within one minute.

Example

Design Concentration For All Areas = 39.0%
Discharge Time = 80 seconds (Note: Discharge times less than or equal to those shown on the chart are acceptable)

Distributed by SIRINA
An authorized ANSUL
Distributor

Design

APPLICATION METHOD (Continued)

Total Flooding (Continued)

STEP NO. 16 – Determine the Estimated System Flow Rate

This step is required to estimate the Manifold Orifice Device size, the downstream pipe sizes, and to determine pressure-venting requirements.

⚠ CAUTION

The flow rates established in this and the following steps are estimated flow rates only. These flow rates are estimate solely for the purpose of estimating device sizes for quotation purposes. The flow calculation program will calculate actual system flow rates.

To estimate the system flow rate (CFM), first multiply the total quantity of actual agent supplied by 0.9 (90%), and then divide that number by the total discharge time (in minutes).

(Total agent supplied (from Step No. 9) x 0.9) ÷ discharge time (in minutes)

NOTE: The flow rate established during this step is an estimated flow rate only. Actual system performance will most likely vary from that calculated here. It is the Designer's responsibility to determine suitability of this estimate. It may be advisable to increase a pipe size if the estimate approaches the maximum flow rate for a given pipe size.

Example

878 ft^3 Total Agent Supplied x 0.9 = 790.2 ÷ 1.33 Discharge Time in Minutes = 594 CFM Estimated System Flow Rate

STEP NO. 17 – Estimate the pressure reducer size required

Using the flow rate established in Step No. 16, refer to the Pipe Sizing Estimation Chart (Manifold Pipe Size) on Page 5-14 to determine the estimated Pressure Reducer size. INERGEN manifolds require the use of Schedule 80 or Schedule 160 pipe depending on the size of pipe and joining methods. Threaded manifolds larger than 2 1/2 in. pipe size will require Schedule 160 pipe, welded manifolds will require Schedule 80 pipe in all sizes.

NOTE: It may be in the Designer's best interest to increase the estimated size if the estimated flow rate approaches the upper limit for the pipe size indicated, especially if Schedule 160 pipe is required.

Example

594 CFM = 3/4 in. Pressure Reducer

STEP NO. 18 – Determine the Nozzle Quantity

Nozzle quantity will be determined by many factors, such as size and shape of the hazard area, height of the ceiling, flow rates through the nozzles, available orifice sizes, etc.

To determine the quantity of nozzles required, divide the area length by 32 ft. and then round up to the next whole number. Then divide the area width by 32 ft. and round up to the next whole number. Then, multiply the two answers to determine the total nozzle quantity.

Complete this step for each area protected by the system.

360° NOZZLE REQUIREMENTS:

- Maximum coverage length per nozzle – 32 ft. (9.8 m).
- Maximum coverage width per nozzle – 32 ft. (9.8 m).
- Maximum radial distance per nozzle – 22.6 ft. (6.9 m). The radial distance is defined as the distance from the nozzle to the farthest point of the area protected.
- Nozzle should be placed as close to the center of the hazard as possible. On multiple nozzle systems, the nozzles should be as equally spaced as possible.

Distributed by SIRINA
An authorized ANSUL
Distributor

Design

APPLICATION METHOD (Continued)

Total Flooding (Continued)

180° NOZZLE REQUIREMENTS:

- Maximum coverage length per nozzle – 32 ft. (9.8 m).
- Maximum coverage width per nozzle – 32 ft. (9.8 m).
- Maximum radial distance per nozzle – 35.8 ft. (10.9 m). The radial distance is defined as the distance from the nozzle to the farthest point of the area protected.
- Nozzle and/or deflector must be located within 6 in. (152 mm) of the wall of the hazard.
- The index mark on the bottom of the nozzle must point at the center of the hazard.

REQUIREMENTS COMMON TO ALL NOZZLES:

- Maximum nozzle height above floor level for a single row of nozzles is 20 ft. (6.1 m). For ceiling heights over 20 ft. (6.1 m), an additional row of nozzles is required.
- Minimum nozzle height above floor of hazard is 7 in. (178 mm).
- The nozzle(s) must be located in the hazard area to be protected. Separate enclosures or partial enclosures located within one common, protected hazard area may require additional nozzles within the enclosure to assure proper agent distribution within the entire common hazard area.
- If nozzle velocity is a concern, the designer may wish to add additional nozzles to lower the individual nozzle velocity to an acceptable limit.
- If the room is an odd shape, the designer may wish to increase the nozzle quantity to provide a more even distribution of agent.
- For multiple level hazards, the intermediate levels of nozzles must be positioned at the top of the designed height for each intermediate level. Nozzles mounted at the ceiling must be within 12 in. (305 mm) of the ceiling.

Example

Computer Room

- 20 ft. Length ÷ 32 = 0.625 = 1 nozzle
- 10 ft. Width ÷ 32 = 0.3125 = 1 nozzle
- 1 nozzle x 1 nozzle = 1 nozzle for the computer room

Subfloor

- 20 ft. Length ÷ 32 = 0.625 = 1 nozzle
- 10 ft. Width ÷ 32 = 0.3125 = 1 nozzle
- 1 nozzle x 1 nozzle = 1 nozzle for the subfloor

STEP NO. 19 – Estimate Agent Flow Rate for Each Area

This step estimates the total flow rate into each protected space to allow the designer to estimate nozzle sizes for quotation purposes. **NOTE:** This is an estimate only. It is the designer's responsibility to assess the correctness of this estimate. If the flow rate approaches the top end of the allowable flow rate for a given size pipe, it may be in the Designers best interest to increase the pipe size.

Multiply the actual agent quantity supplied for each area by 0.9 (90%) and then divide that result by the discharge time in minutes for the estimated flow rate for each area.

Complete this step for each area protected by the system.

Example

Computer Room

- 798 ft^3 Actual Agent Quantity Supplied x .9 = 718.2 ÷ 1.33 Discharge Time in Minutes = 540 CFM Estimated Flow Rate Per Area

Subfloor

- 80 ft^3 Actual Agent Quantity Supplied x .9 = 72.0 ÷ 1.33 Discharge Time in Minutes = 54 CFM Estimated Flow Rate Per Area.

STEP NO. 20 – Estimate the Nozzle Flow Rates

If all of the nozzles within the hazard area will have the same flow rate, divide the Estimated Flow Rate for the Area (Step No. 19) by the nozzle quantity (Step No. 18).

If all of the nozzles within the hazard area will not have the same flow rate, perform a percentage calculation using the volume protected by each nozzle divided by the total volume for the area and then multiply the Flow Rate for the Area (Step No. 19) by the volume percent calculated previously to determine the flow rate for that nozzle. Complete this procedure for each nozzle in the system.

If the design includes multiple levels of nozzles, remember to include all nozzles on all levels in this step.

Complete this step for each area protected by the system.

Example

Computer Room

- 540 CFM (Estimated Flow Rate Per Area) ÷ 1 = 540 CFM Nozzle Flow Rate

Subfloor

- 54 CFM (Estimated Flow Rate Per Area ÷ 1 = 54 CFM Nozzle Flow Rate

Distributed by SIRINA
An authorized ANSUL
Distributor

APPLICATION METHOD (Continued)

Total Flooding (Continued)

STEP NO. 21 – Determine the Nozzle Locations and Lay Out the Interconnecting Piping

Using a plan view drawing of the protected areas, locate each nozzle and the cylinders. **NOTE:** Nozzles should be located at the top of the hazard area, aimed downward. Connect the nozzles with piping following the piping guidelines listed in the General Information Section and the Installation Section. After all of the nozzles are connected, lay out the piping to the cylinders and lay out the manifold. Manifold layout limitations can be found in the Installation Section of the Design Manual, including a manifold height chart.

When laying out the manifold, remember that a center outlet manifold will usually allow the use of smaller pipe sizes for the horizontal legs of the manifold where the cylinders are connected, especially if these legs are a single size. "H" shaped manifolds are usually preferable to "end outlet," "L," or "U" shaped manifolds. Center to center distances for the cylinders will normally be 12 in. due to the spacing of the brackets. It is normally recommended to keep the Pressure Reducer as close to the manifold outlet as possible to reduce the amount of Schedule 80 or 160 pipe required in the system.

When selecting pipe schedules, keep in mind that the manifold pressure should be assumed to be 2,175 PSI. This will usually dictate the use of Schedule 160 pipe for any size larger than 2 1/2 in. pipe if threaded fittings will be used. If welded or "rolled groove" fittings are used in the manifold, Schedule 80 pipe will be acceptable in most cases for all pipe sizes through 6 in.

If the system is a "Balanced" system, review the pipe layout to assure that all legs of the piping are equal in regards to flow and fittings and that the maximum length of pipe for the longest leg from the manifold to the furthest nozzle is not more than 10% longer than the shortest leg from the manifold to the closest nozzle.

If the system is an "Unbalanced" system, review the piping arrangement for proper tee splits per the limitations listed in the General Information Section and revise the piping accordingly if necessary.

If the system includes Selector Valves, refer to the information later in this section for assistance in laying out the piping for the Selector Valve manifold.

STEP 22 – Complete an Isometric Sketch of the Piping Layout

Create an isometric sketch of the piping for use in inputting the information in the INERGEN Designer program. After the sketch has been completed, identify all of the pipe lengths.

Identify and label all node points, manifold designators, and nozzle designators. The first point on the manifold is considered as the inlet to the cylinder valve inside the cylinder. The second point is considered as the outlet of the discharge hose. This first section of pipe must always be included in any system; therefore the flow calculation program will include it automatically.

- **Piping Node Points** – Piping sections are numbered starting at the inlet to the valve on the cylinder furthest from the manifold outlet. Each point where flow increases or flow splits marks the end of a pipe section and the start of a new pipe section. Nodes must be numbered numerically: 1, 2, 3, etc. Sequential numbering is not required, however, it is recommended to prevent confusion. **NOTE:** Anytime a tee is added to the piping to take off pressure to operate a pressure trip or pressure switch, a node point should be assigned and the fitting should be entered as a coupling to address the friction loss.
- **Nozzles** – Nozzles are indicated with a number between 301 and 499. Sequential numbering is not required; however, it is recommended that the designer use some sort of numbering system to prevent confusion.
- **Manifold Designator** – The manifold designator code is a number between 1 and 299. This code identifies the number of cylinders supplying any given section of the manifold. Example: A system with 38 cylinders supplying a section of pipe would, for that point, have a manifold designator of 38. Another system, having 102 cylinders supplying a section of pipe, would, for that point, have a manifold designator of 102.

The first section of pipe chosen as a manifold designator must start with the designator code of 1.

Distributed by SIRINA
An authorized ANSUL
Distributor

Design

APPLICATION METHOD (Continued)

Total Flooding (Continued)

STEP 23 – Estimate Pipe Size for All Areas (Optional)

To complete this step, start by labeling all nozzle flow rates. Then, working backwards from the nozzles, determine the flow rate for each section of pipe. Using the Pipe Size Estimation Chart on Page 5-14 of this section, estimate the pipe size for each section of pipe and the nozzles. Consider a pipe section as short if it is less than 20 feet in length. Consider a pipe section as long if it exceeds 20 feet in length; remember that these are estimates only. The designer may wish to judge the merits of selecting a long run if this is necessary. Selection of a long run will increase the pipe size due to increased friction loss encountered in long pipe runs.

Flow rates for individual pipes in the manifold can be estimated by dividing the flow rate for the system (Step No. 16) by the number of cylinders in the system. Then multiply the result by the number of cylinders supplying that section of pipe.

The flow calculation program will estimate pipe sizes automatically; therefore this step is optional. The designer may wish to use the pipe size estimation charts to estimate the nozzle pipe sizes for quotation purposes. **NOTE:** This is an estimate only. It is the designer's responsibility to assess the correctness of this estimate. If the flow rate approaches the top end of the allowable flow rate for a given size, it may be in the Designers best interest to increase the pipe size.

Example

Computer Room

- 540 CFM = 3/4 in. Nozzle

Subfloor

- 54 CFM = 1/4 in. Nozzle

STEP 24 — Determine the Open Area Required for Pressure Venting During Discharge

It is necessary to calculate the opening area needed for pressure venting to determine if the hazard area(s) include sufficient openings or if more openings are required.

Refer to the Pressure Relief Venting Guide, Part No. 422793, in the Appendix section for detailed information to determine free vent area required. If the enclosures wall strength cannot be determined, Ansul recommends a maximum wall strength of 5 lbs./ft^2 unless the architect or owner provides a different value.

See Page No. 3, Steps No. 1 and No. 3 in The Venting Guide for calculations to determine the Free Vent Area required.

Example

Computer Room

- (2.7 x 798 ft^3) ÷ 1.33 = 1620 CFM, (1620 x 0.0855) ÷ sq. rt. of 5 PSF = 61.9 in^2 Free Vent Area Required

Subfloor

- (2.7 x 80 ft^3) ÷ 1.33 = 162 CFM, (162 x 0.0855) ÷ sq. rt. of 5 PSF = 6.2 in^2 Free Vent Area Required

STEP NO. 25 – Perform Flow Calculations

With the information developed in Steps No. 21 and 22, run the computer program to determine the final pipe sizes, nozzle orifice sizes, and pressure reducer size. The ▸ INERGEN Designer 2.1.2 Computer Design Program is the only calculation method to be used with Ansul Engineered INERGEN Systems which are designed as "Unbalanced" systems. If the system will be designed as a "Balanced" ▸ system, use the INERGEN Designer – Balanced 1.3.0 software.

If the system protects more than one area by use of Selector Valves, the flow calculation for the worst system from a hydraulic flow standpoint should be calculated first. Once the pipe sizes for this system are selected, the manifold for all of the other systems must use the same size pipe. These pipe sizes must be entered manually. Pipe sizes starting with the outlet from the Selector Valve manifold, including the section immediately before the Selector Valve, can be estimated by the flow calculation program.

Distributed by SIRINA
An authorized ANSUL
Distributor

APPLICATION METHOD (Continued)

Total Flooding (Continued)

STEP NO. 26 – Revise the Design Worksheet (Optional)

This step is to be completed only if the designer is completing the INERGEN Design Worksheet manually; the INERGEN Designer program automatically revises the Design Worksheet after a flow calculation is completed.

Rework the design worksheet for each area starting with the entry for "Actual INERGEN Agent Supplied Per Area, Step No. 10," and ending with "System Discharge Time, Step No. 15." Replace the "actual INERGEN agent supplied per area" with the agent quantities determined in the "Nozzle Performance" section of the flow calculation program.

STEP NO. 27 – Verify Actual System Performance

Once a flow calculation has been completed and the Design Worksheet has been revised (optional), it is important that the designer review all results to verify system performance. The INERGEN Designer program will flag most errors and prevent a completed flow calculation until they have been corrected. However, this does not guarantee that the systems performance will match what the designer expects. Careful review is an important step in the design of any Fire Protection system, which must be completed before final approval of the system.

Review the revised worksheet to verify that:

1. The agent concentration at maximum temperature is within acceptable limits (34.2% to 52% for occupied spaces).
2. The agent quantity is above the amount required in the Initial INERGEN Quantity box (see Step No. 7).
3. The discharge time from the flow calculation is equal to or less than that listed for all areas on the Design Worksheet.

STEP NO. 28 – Determine the Pilot Cylinder Requirements

After all flow calculations have been completed, refer to the following table, "Pilot Cylinder Requirements Table", to determine if additional pilot cylinders are required in the system.

Proper backpressure actuation of the INERGEN cylinder valves requires that the manifold reach a prescribed minimum pressure. If this minimum pressure is not achieved in the manifold, only the cylinder operated by the electric actuator will open. This will result in a system discharge which will not allow enough agent to the hazard enclosure, which may prevent achievement of the proper minimum design concentration and result in the failure to suppress a fire. The pilot cylinder requirements identified on the "Pilot Cylinder Requirements Table" allows pressure from the electric actuator to operate as many pilot cylinders as necessary to assure that the manifold reaches a pressure high enough to open all cylinders attached to that manifold.

Example

(Estimated Pilot Cylinder Requirement)

▸ System Flow Rate = 594 CFM

(1) Pilot Cylinder Required

Distributed by SIRINA
An authorized ANSUL
Distributor

Design

INERGEN SYSTEM DESIGN SECONDARY PILOT CYLINDER REQUIREMENT TABLE

Pilot Cylinders Required	Estimated Maximum System Flow Rate (cu ft./min.)	Maximum Orifice Diameter (inches)
1	5,000	.750
2	9,000	1.063
3	14,500	1.297
4	17,000	1.500
5	24,000	1.672
6	29,000	1.828
7	34,000	1.984
8	37,000	2.109
9	42,000	2.250
10	46,000	2.375
11	51,000	2.500
12	53,000	2.594
13	57,000	2.703
14	59,000	2.797
15	61,000	2.906

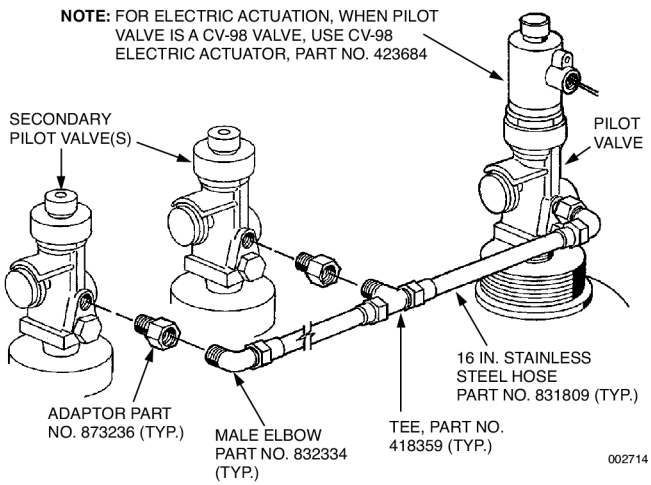

STEP NO. 29 – Complete Layout of the System

At this point, all final details of the system can be finalized. These details include: design of the Pilot Cylinder Actuation system, bracketing, actuation components, etc.

STEP NO. 30 – Create a Bill of Materials

Create a list of all materials necessary to install the system. This can be done by hand or by use of the Bill of Materials Tab in the INERGEN Designer program.

STEP NO. 31 – Create Installation Drawings

The final step in the design of an INERGEN system is completion of installation drawings for submittal to the appropriate authority and the customer. These drawings should include all details necessary for installation of this system.

SELECTOR VALVE SYSTEMS

The following information must be considered when designing a selector valve system.

- Each hazard area must be treated as a separate system design.
- Start with the largest system (system with the highest estimated flow rate). This is necessary so that the manifold size will handle the maximum quantity of INERGEN.
- After calculating the largest system first, complete additional system calculations on the remaining systems. Use the manifold pipe size calculated from first system design (system with the highest flow rate).
- Selector valve systems can be used for multi-hazards when all areas are considered separate fire hazards.
- Selector valve can be located either upstream or downstream of the pressure reducer.
- The piping located between the pressure reducer and the ► selector valve must be rated for pressure of 2175 psi ► (150 bar) or greater.
- Maximum distance between selector valve and pressure reducer is 20 ft. (6.1 m).
- When designing the manifold for a selector valve system, check valves must be installed in the manifold to separate the actuation of the smaller system(s) from the larger ones.
- A minimum of 10 pipe diameters is required between the pressure reducer and the selector valve. The pressure reducer can be located either before or after the selector valve.
- If the pressure reducer is downstream of a selector valve, each pressure reducer must utilize its own individual selector valve.

The following are four typical examples of selector valve systems:

Distributed by SIRINA
An authorized ANSUL
Distributor

Design

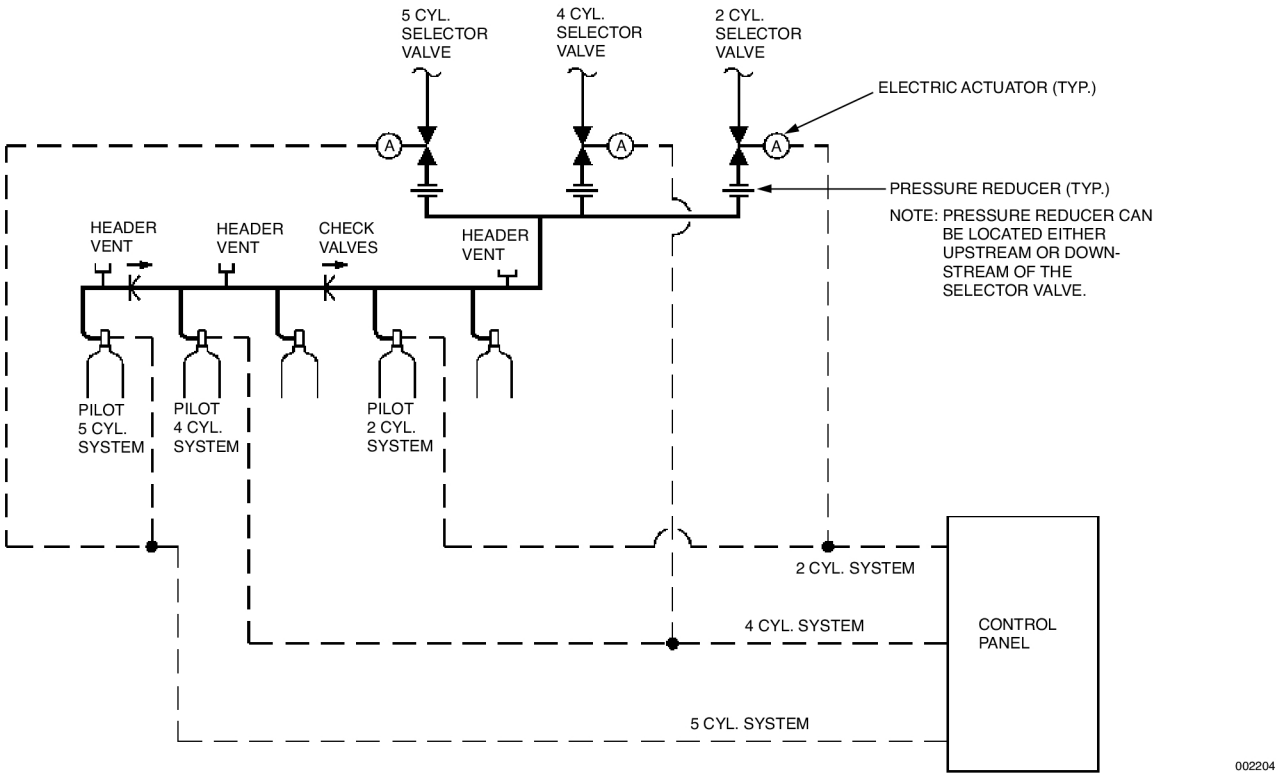

EXAMPLE NO. 1 (TYPICAL SELECTOR VALVE INSTALLATION – ELECTRIC ACTUATION)

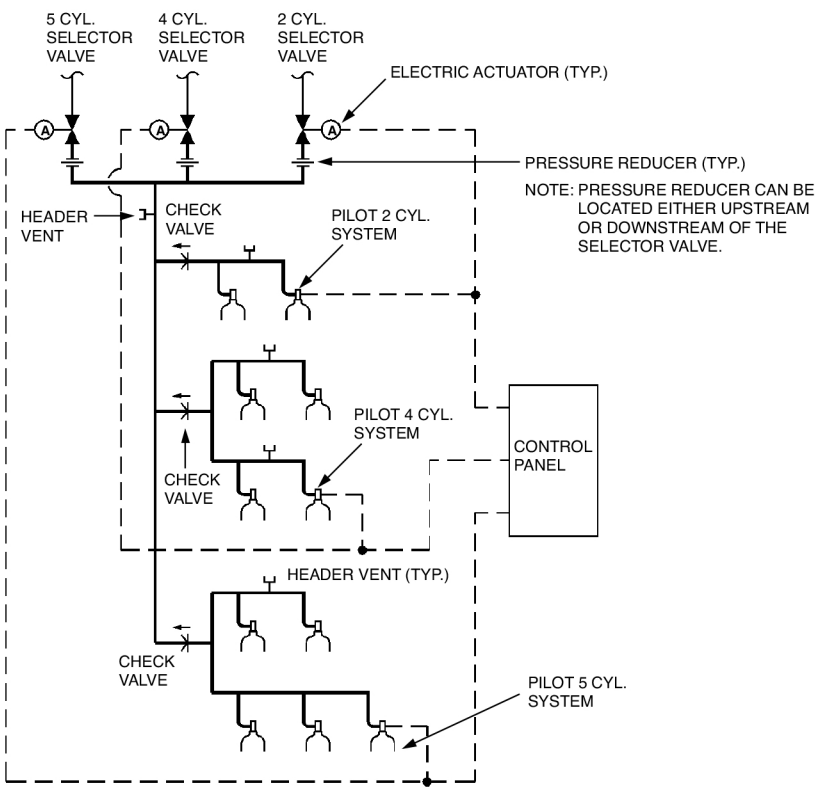

EXAMPLE NO. 2 (TYPICAL SELECTOR VALVE INSTALLATION – ELECTRIC ACTUATION)

Distributed by SIRINA
An authorized ANSUL
Distributor

Design

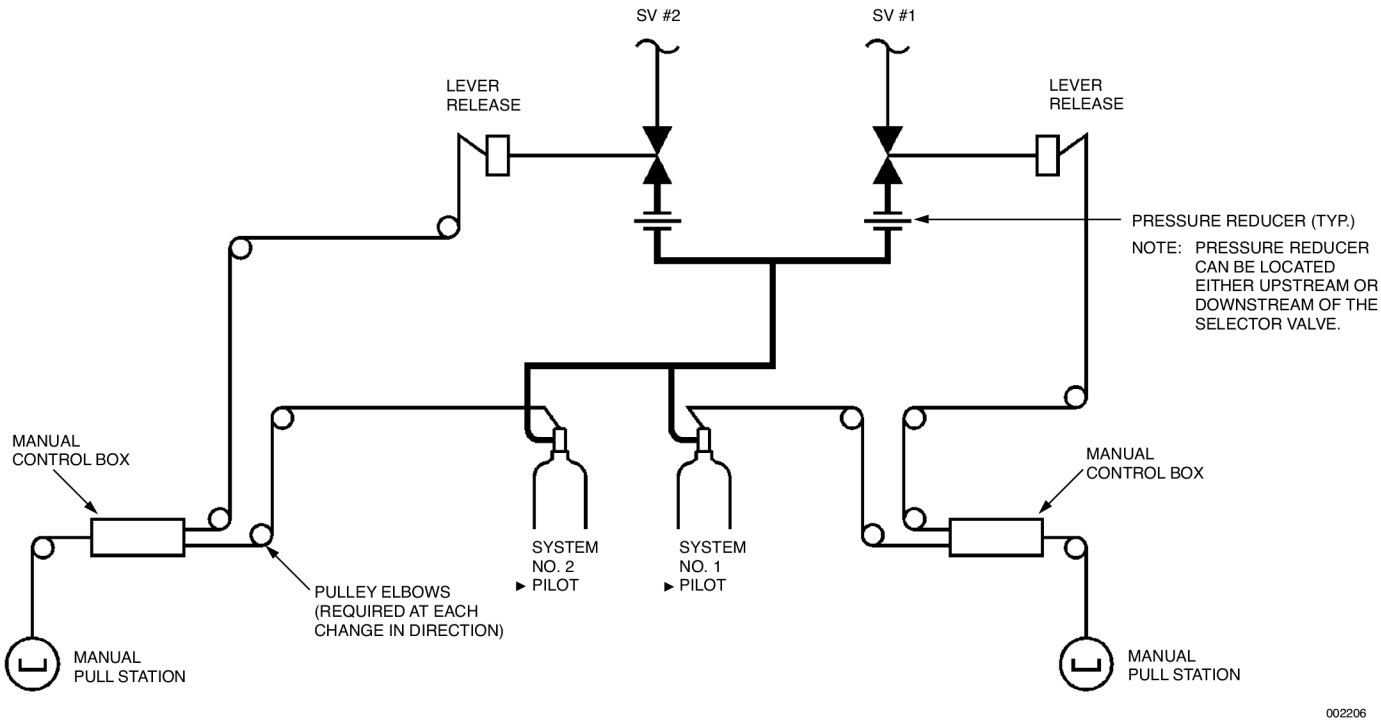

EXAMPLE NO. 3 (TYPICAL SELECTOR VALVE INSTALLATION – MANUAL ACTUATION)

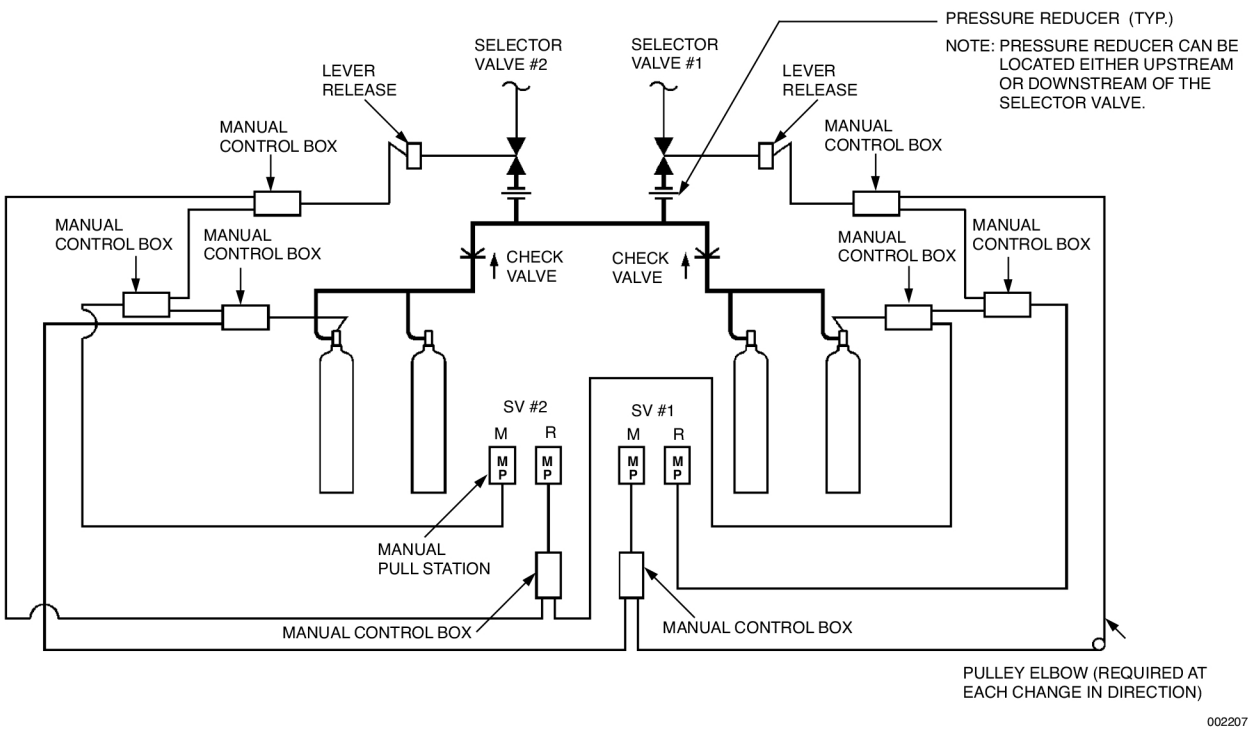

EXAMPLE NO. 4 (TYPICAL SELECTOR VALVE INSTALLATION – MANUAL ACTUATION WITH CONNECTED RESERVE)

Distributed by SIRINA
An authorized ANSUL
Distributor

Design

SAMPLE APPLICATIONS

Refer to Section XI (Typical Applications) for examples of some typical applications. By reviewing these examples, it may help answer some questions concerning the total design process.

ACTUATION REQUIREMENTS

Three types of actuation are available for the INERGEN system: manual, pneumatic, and electric.

Manual Actuation

Manual actuation can be used with or without automatic detection. When no detection is required, based on acceptance by the authority having jurisdiction, the lever actuator can be mounted on top of the INERGEN cylinder valve. The manual lever release actuator provides a manual means of agent cylinder actuation by direct manual actuation of its pull lever or cable actuation when used in conjunction with a remote manual pull station. One pilot cylinder valve is required on multiple cylinder systems. The pilot valve is the only one that requires a manual actuator. On two or more cylinder systems, the remaining cylinders are actuated by the pressure generated within the distribution manifold. The maximum length of actuator cable which may be used in the remote line is 125 ft. (38 m). The maximum number of corner pulley elbows is 10.

Pneumatic Actuation

Pneumatic actuation is accomplished by supplying pressure to the pilot port on the INERGEN cylinder valve. The pressure is supplied from an LT-30-R nitrogen cartridge located in the ANSUL AUTOMAN® II-C release. The cartridge pressure pneumatically opens the cylinder valve.

One pilot valve is required in single or multiple cylinder systems. The rest of the cylinders will be actuated from the pressure of the pilot cylinder. The maximum length of 1/4 in. Schedule 40 pipe is 100 ft. (30.5 m). If it is necessary to have an actuation pipe run which exceeds the maximum allowable 1/4 in. pipe requirements, 1/4 in. O.D. stainless steel tubing with a wall thickness of 0.065 can be used for the actuation line. When this size tubing is used, a maximum of 300 ft. (91.4 m), with no reductions for elbows or tees, is allowed. See NFPA 2001, Paragraph 2-3.4.2 for information on pneumatic control equipment

Electric Actuation

CV-98 Valve – One or two CV-98 electric actuators, Part No. 423684, can be used on a single release circuit. When using either one or two CV-98 electric actuators, a current limiter, Part No. 427354, must always be used.

NOTE: Solenoid actuator cannot be wired on the same release circuit with a CV-98 electric actuator.

Normal system design requires that only one pilot valve contains an electric actuator. On multiple cylinder systems, the additional cylinders are actuated by the pressure generated within the distribution manifold.

In auxiliary or override applications, a lever actuator can be installed on top of the CV-98 valve or on top of or CV-98 electric actuator.

Multiple Manifold Actuator

A maximum of 40 cylinders can be installed on a single manifold and actuated from a single actuated main pilot valve. When more than 40 cylinders are required, up to 12 additional pilot valves (12 additional manifolds each having a maximum of 40 cylinders) can be pneumatically actuated from the “pilot” manifold. See Installation Section VI for detailed piping requirements.

“Secondary” Pilot Cylinders

On some very large systems, because of the manifold size, “secondary” pilot valves are required to be actuated from the single “main” pilot valve in order to produce enough manifold pressure to operate the remaining cylinders on the manifold. See “Pilot Cylinder Requirement Table” in Step No. 28, Page 5-5.7, for detailed secondary pilot cylinder information.

Distributed by SIRINA
An authorized ANSUL
Distributor

Design

ACCESSORIES

Specific selection and placement of accessories that may be used with the INERGEN system are:

Mechanical Manual Pull

The mechanical manual pull station allows the INERGEN system to be manually operated at some point distant from the control system or cylinders. The pull station should be installed at a maximum height of 60 in. (15.2 cm) and located in the path of exit.

The total length of wire rope used for each mechanical manual pull station within a system must not exceed 125 ft. (38 m).

The maximum number of pulley elbows that may be used per pull station is 10.

Parts that are required for installation of a remote manual pull station, either electric or mechanical are:

Description	Part No.
Latch Type Pull Box	45062
Type A Break Glass Pull Box	41527
Pair of Legs for Pull Box	41542
1/16 in. Cable W/Swaged End Fitting – 50 ft. (15.2 m)	42104
1/16 in. Cable W/Swaged End Fitting – 100 ft. (30.5 m)	42109
1/16 in. Cable W/Swaged End Fitting – 150 ft. (45.7 m)	42113
Aluminum Corner Pulley (Use With EMT)	423250
Brass Corner Pulley-Nylon Wheel-Watertight	42678
Brass Corner Pulley-Brass Wheel-Watertight	45515
Dual/Triple Control Box	42784
Pull Cable Equalizer	42791
1/16 in. Cable Clamp	45333
Flared End Fitting	40060
Pulley Adaptor – Right and Left Hand (Brass Pulley Only)	40696

Pressure Switch

The pressure switch is operated by the INERGEN agent pressure when the system is discharged. The piping to the pressure switch is normally run from the distribution manifold but can also be run from an ANSUL AUTOMAN Release Cartridge. The pressure switch can be used to open or close electrical circuits to either shut down equipment or turn on lights or alarms or to signal the control panel.

The piping required to connect from the system manifold to the pressure switch is 1/4 in. Schedule 40 (if connected to distribution piping), or Schedule 80 (if connected to manifold). Maximum length of 1/4 in. piping from INERGEN manifold to all accessories must not exceed 100 ft. (30.5 m).

Pressure switches that may be used on system are:

Description	Part No.
Pressure Switch – DPST	46250

The pressure switches are rated as follows:

Part No. 46250 – 2 HP @ 240VAC/480 VAC or 2 HP @ 250 VDC, 30A 250V AC/DC 5A 480V AC/DC

Pressure Trip

The pressure trip is connected to the actuation or discharge line of a INERGEN system. By either pneumatic or manual actuation, the pressure trip can release spring or weight powered devices to close doors and windows, open fuel dump valves, close fire dampers or close fuel supply valves.

Piping to the pressure trip must be determined based on the maximum pressure at point of connection. Refer to Estimation Chart (Pipe Pressure) in Appendix Section to determine required schedule and grade.

Pressure trip piping connection must be made to the system piping at the point where the system piping is closest to the pressure trip installed location. Maximum length of 1/4 in. piping to all accessories must not exceed 100 ft. (30.5 m).

Pressure trip that may be used on system is:

Description	Part No.
Pressure Trip	5156

Distributed by SIRINA
An authorized ANSUL
Distributor

ACCESSORIES (Continued)

Alarms

Several types of electric alarms are available. Each of these operate on 24 VDC and must be used on the alarm circuit of an AUTOPULSE® Control System. Refer to appropriate AUTOPULSE Control System installation, maintenance, and recharge manual for detailed design information. 120 VAC alarms are also available to use with an ANSUL AUTOMAN II-C Releasing Device.

Pressure Operated Siren

The siren is operated with the INERGEN pressure from the system. The piping is normally run from the system distribution manifold. The design requirements are as follows:

- Required Pipe: 1/4 in. Schedule 40
- Flow Rate: 100 cu. ft. per minute (2.8 cu. m per minute)
- Maximum Sirens: 4
- Maximum Pipe Length: 200 ft. (61 m) minus 1 ft. (.3 m) for every elbow used
- Design of system must include agent used through siren if siren is not located in hazard area

Pressure operated siren that may be used on system is:

Description	Part No.
Pressure Operated Siren	419700

Control Panels

The AUTOPULSE Control System is the only approved detection and alarm system for use with the INERGEN fire suppression system. Several styles of AUTOPULSE panels are available. Refer to appropriate AUTOPULSE Control System installation, maintenance, and recharge manual for detailed design information.

RESERVE SYSTEM

Normally the authority having jurisdiction will determine whether a hazard requires a reserve set of INERGEN cylinders, either connected or spares.

NFPA 2001, Standard on Clean Agent Fire Extinguishing Systems, states: “Where required, the reserve quantity shall be as many multiples of the primary supply as the authority having jurisdiction considers necessary.”

“Where uninterrupted protection is required, both primary and reserve supply shall be permanently connected to the distribution piping and arranged for easy changeover.”

IRI (Industrial Risk Insurers) requires the following:

“In high pressure systems an extra full complement of charged cylinders (connected reserve) manifolded and piped to feed into the automatic system should be provided on all installations. The reserve supply is actuated by manual operation of the main/reserve switch on either electrically operated or pneumatically operated systems.

A connected reserve is desirable for four reasons:

– Protection should reflash occur.

– Reliability should the main bank malfunction.

– Protection during impairment when main tanks are being replaced.

– Protection of other hazards if selector valves are involved and multiple hazards are protected by the same set of cylinders. See selector valve information on Page 5-5.7.

If a full complement of charged cylinders cannot be obtained, or the empty cylinders recharged, delivered and reinstalled within 24 hours, a third complement of fully charged spare cylinders should be maintained on premises for emergency use. The need for spare cylinders may depend upon whether or not the hazard is under protection of automatic sprinklers.”

When designing a system, always determine if, and what kind of, reserve system is required.

NOTE: Usage of reserve systems with primary system may make hazard area unsafe for normal occupancy.

DEVELOP BILL OF MATERIALS

After completing the subsections of the design section, finalize the system design by completing a bill of material for the system. The bill of material, hazard sketches, hydraulic calculations, and any notes, should be kept on file for future reference.

▸

DATE: _____

QUOTE/JOB NUMBER: _____

CUSTOMER: _____

INERGEN® SYSTEM DESIGN CALCULATION WORKSHEET

REV. 5

VOLUME CALCULATIONS:	AREA 1	AREA 2	AREA 3	AREA 4	AREA 5
Area Name:					
Length (ft.):					
Width (ft.):					
Height (ft.):					
Area (sq. ft.):					
Volume (cu. ft.):					
Volume Reductions:					
Structural Reductions (cu. ft.):					
Total Reduced Volume: (Volume – Structural Reductions)					
ROOM MINIMUM AMBIENT TEMP.:					
DESIGN CONCENTRATION:					
FLOODING FACTOR: (From Table)					
INITIAL INERGEN QUANTITY CALC.: INERGEN Quantity (cu. ft.): (Total Reduced Volume x Flooding Factor) or (Formula from Design Manual)					
ALTITUDE CORRECTION:					
Height Above or Below Sea Level:					
Factor: (From Design Manual Table)					
ACTUAL INERGEN QUANTITY (cu. ft.): (Initial INERGEN Quantity x Altitude Correction Factor)					
TOTAL INERGEN QTY. (cu. ft.): (Sum of all Actual INERGEN qty's)					

Distributed by SIRINA
An authorized ANSUL
Distributor

INERGEN® SYSTEM DESIGN CALCULATION WORKSHEET (Continued)

TOTAL INERGEN QTY. (CU. FT.): _____ (From Page 1)

CYLINDER REQUIREMENTS: **TOTAL CYLINDER CAPACITY:**

(Total INERGEN qty. ÷ Cylinder Capacity rounded to next highest whole number) (Cyl. qty. x Cyl. cap.)

439 cu. ft. Cylinders:		
355 cu. ft. Cylinders:		
266 cu. ft. Cylinders:		
205 cu. ft. Cylinders:		

CYLINDER SIZE SELECTED: _____ (Cylinder qty. x Cylinder capacity)

INERGEN AGENT SUPPLIED: _____

ACTUAL INERGEN AGENT PER AREA:					
[(Actual INERGEN Qty. ÷ Total INERGEN Qty.) x INERGEN Agent Supplied]					
ACTUAL INERGEN FLOODING FACTOR:					
[(Actual INERGEN Agent per Area ÷ Alt. Correction Factor) ÷ Total Reduced Volume]					
CONCENTRATION RANGE CHECK:					
► **(Design Conc. Must be Between 34.2% – 52% For Occupied Spaces)**					
Room Max. Ambient Temp.:					
Design Concentration at Max. Temp.:					
(Locate Actual INERGEN Conc. at Max. Temp. on Table, or Use Calc. in Design Manual)					
DISCHARGE TIME:					
Normal Ambient Temperature:					
Design Concentration at Ambient Temp.:					
(Locate Actual INERGEN Conc. at Ambient Temp. on Table, or Use Calc. in Design Manual)					
90% of Agent Discharge Time (Sec.):					
(Time From Table in Design Manual)					
90% of Agent Discharge Time (Min.):					
(Discharge Time (Sec.) ÷ 60)					

ESTIMATED FLOW RATES

Estimated System Flow Rate: _____ [(INERGEN Agent Supplied x .9) ÷ 90% Discharge Time (Min.)]

Estimated Pressure Reducer Pipe Size: _____ (Refer to Pipe Sizing Chart)

Nozzle Quantity:					
[Length ÷ 32 (Rounded to Next Highest Whole Number) x Width ÷ 32 (Rounded to Next Highest Whole Number)]					
Estimated Nozzle Flow Rate:					
[((Actual INERGEN Agent Per Area x .9) ÷ 90% Discharge Time (Min.)) ÷ Nozzle Quantity]					
Estimated Nozzle Pipe Size:					
Pipe Length Factor (S = Short, L = Long):					
Pipe Size:					
(Refer to Pipe Sizing Chart)					

Distributed by SIRINA
An authorized ANSUL Distributor

ANSUL and INERGEN are registered trademarks.
TYCO SAFETY PRODUCTS, MARINETTE, WI 54143-2542 715-735-7411 Form No. F-93226-6 © 2001 Ansul Incorporated

Distributed by SIRINA
An authorized ANSUL
Distributor

Flooding Factor Chart

FLOODING FACTORS FOR IG541 (cubic feet/cubic foot)

Temp. (°F)	Specific Volume Cu. Ft./lb.	33%	34%	34.2%	35%	36%	37%	38%	39%	40%	41%	42%	43%	44%	45%	46%
–40	9.001	0.505	0.524	0.528	0.544	0.563	0.583	0.603	0.624	0.645	0.666	0.687	0.709	0.732	0.755	0.778
–30	9.215	0.494	0.512	0.516	0.531	0.550	0.570	0.589	0.609	0.630	0.650	0.672	0.693	0.715	0.737	0.760
–20	9.429	0.482	0.501	0.504	0.519	0.538	0.557	0.576	0.596	0.615	0.636	0.656	0.677	0.699	0.720	0.742
–10	9.644	0.472	0.489	0.493	0.507	0.526	0.544	0.563	0.582	0.602	0.622	0.642	0.662	0.683	0.704	0.726
0	9.858	0.461	0.479	0.482	0.496	0.514	0.532	0.551	0.570	0.589	0.608	0.628	0.648	0.668	0.689	0.710
10	10.072	0.452	0.469	0.472	0.486	0.503	0.521	0.539	0.558	0.576	0.595	0.614	0.634	0.654	0.674	0.695
20	10.287	0.442	0.459	0.462	0.476	0.493	0.510	0.528	0.546	0.564	0.583	0.602	0.621	0.640	0.660	0.680
30	10.501	0.433	0.450	0.453	0.466	0.483	0.500	0.517	0.535	0.553	0.571	0.589	0.608	0.627	0.647	0.667
40	10.715	0.425	0.441	0.444	0.457	0.473	0.490	0.507	0.524	0.542	0.559	0.578	0.596	0.615	0.634	0.653
50	10.929	0.416	0.432	0.435	0.448	0.464	0.480	0.497	0.514	0.531	0.548	0.566	0.584	0.603	0.621	0.640
60	11.144	0.408	0.424	0.427	0.439	0.455	0.471	0.487	0.504	0.521	0.538	0.555	0.573	0.591	0.609	0.628
70	11.358	0.401	0.416	0.419	0.431	0.446	0.462	0.478	0.494	0.511	0.528	0.545	0.562	0.580	0.598	0.616
80	11.572	0.393	0.408	0.411	0.423	0.438	0.454	0.469	0.485	0.501	0.518	0.535	0.552	0.569	0.587	0.605
90	11.787	0.386	0.400	0.403	0.415	0.430	0.445	0.461	0.476	0.492	0.509	0.525	0.542	0.559	0.576	0.594
100	12.001	0.379	0.393	0.396	0.408	0.422	0.437	0.453	0.468	0.484	0.499	0.516	0.532	0.549	0.566	0.583
110	12.215	0.372	0.386	0.389	0.401	0.415	0.430	0.445	0.460	0.475	0.491	0.507	0.523	0.539	0.556	0.573
120	12.430	0.366	0.380	0.383	0.394	0.408	0.422	0.437	0.452	0.467	0.482	0.498	0.514	0.530	0.546	0.563
130	12.644	0.360	0.373	0.376	0.387	0.401	0.415	0.429	0.444	0.459	0.474	0.489	0.505	0.521	0.537	0.554
140	12.858	0.354	0.367	0.370	0.381	0.394	0.408	0.422	0.437	0.451	0.466	0.481	0.497	0.512	0.528	0.544
150	13.072	0.348	0.361	0.364	0.374	0.388	0.402	0.415	0.430	0.444	0.459	0.473	0.489	0.504	0.520	0.841
160	13.287	0.342	0.355	0.358	0.368	0.382	0.395	0.409	0.423	0.437	0.451	0.466	0.481	0.496	0.511	0.527
170	13.501	0.337	0.350	0.352	0.362	0.376	0.389	0.402	0.416	0.430	0.444	0.458	0.473	0.488	0.503	0.518
180	13.715	0.332	0.344	0.347	0.357	0.370	0.383	0.396	0.409	0.423	0.437	0.451	0.466	0.480	0.495	0.510
190	13.930	0.327	0.339	0.341	0.351	0.364	0.377	0.390	0.403	0.417	0.430	0.444	0.458	0.473	0.488	0.503
200	14.144	0.322	0.334	0.336	0.346	0.358	0.371	0.384	0.397	0.410	0.424	0.438	0.451	0.466	0.480	0.495

(Chart continued on back side)

Distributed by SIRINA
An authorized ANSUL
Distributor

Flooding Factor Chart

FLOODING FACTORS FOR IG541 (cubic feet/cubic foot)

Temp. (°F)	Specific Volume Cu. Ft./lb.	47%	48%	49%	50%	51%	52%	53%	54%	55%	56%	57%	58%	59%	60%	61%	62%
–40	9.001	0.801	0.825	0.850	0.875	0.900	0.926	0.953	0.980	1.008	1.036	1.065	1.095	1.125	1.156	1.188	1.221
–30	9.215	0.783	0.806	0.830	0.854	0.879	0.905	0.931	0.957	0.984	1.012	1.040	1.069	1.099	1.130	1.161	1.193
–20	9.429	0.765	0.788	0.811	0.835	0.859	0.884	0.910	0.936	0.962	0.989	1.017	1.045	1.074	1.104	1.134	1.166
–10	9.644	0.748	0.770	0.793	0.816	0.840	0.865	0.889	0.915	0.941	0.967	0.994	1.022	1.050	1.079	1.109	1.140
0	9.858	0.732	0.754	0.776	0.799	0.822	0.846	0.870	0.895	0.920	0.946	0.973	1.000	1.027	1.056	1.085	1.115
10	10.072	0.716	0.738	0.759	0.782	0.805	0.828	0.852	0.876	0.901	0.926	0.952	0.978	1.006	1.033	1.062	1.091
20	10.287	0.701	0.722	0.744	0.765	0.788	0.811	0.834	0.858	0.882	0.907	0.932	0.958	0.985	1.012	1.040	1.069
30	10.501	0.687	0.707	0.728	0.750	0.772	0.794	0.817	0.840	0.864	0.888	0.913	0.938	0.965	0.991	1.019	1.047
40	10.715	0.673	0.693	0.714	0.735	0.756	0.778	0.800	0.823	0.847	0.870	0.895	0.920	0.945	0.971	0.998	1.026
50	10.929	0.660	0.680	0.700	0.720	0.741	0.763	0.785	0.807	0.830	0.853	0.877	0.902	0.927	0.952	0.979	1.006
60	11.144	0.647	0.667	0.686	0.707	0.727	0.748	0.770	0.792	0.814	0.837	0.860	0.884	0.909	0.934	0.960	0.986
70	11.358	0.635	0.654	0.673	0.693	0.713	0.734	0.755	0.777	0.799	0.821	0.844	0.868	0.892	0.916	0.942	0.968
80	11.572	0.623	0.642	0.661	0.680	0.700	0.721	0.741	0.762	0.784	0.806	0.829	0.852	0.875	0.900	0.924	0.950
90	11.787	0.612	0.630	0.649	0.668	0.688	0.707	0.728	0.748	0.770	0.791	0.813	0.836	0.859	0.883	0.908	0.933
100	12.001	0.601	0.619	0.637	0.656	0.675	0.695	0.715	0.735	0.756	0.777	0.799	0.821	0.844	0.867	0.891	0.916
110	12.215	0.590	0.608	0.626	0.645	0.663	0.683	0.702	0.722	0.743	0.764	0.785	0.807	0.829	0.852	0.876	0.900
120	12.430	0.580	0.598	0.615	0.633	0.652	0.671	0.690	0.710	0.730	0.750	0.771	0.793	0.815	0.837	0.861	0.884
130	12.644	0.570	0.588	0.605	0.623	0.641	0.659	0.678	0.698	0.717	0.738	0.758	0.779	0.801	0.823	0.846	0.869
140	12.858	0.561	0.578	0.595	0.612	0.630	0.648	0.667	0.686	0.705	0.725	0.746	0.766	0.788	0.810	0.832	0.855
150	13.072	0.535	0.552	0.568	0.585	0.602	0.620	0.638	0.656	0.675	0.694	0.713	0.733	0.754	0.775	0.796	0.818
160	13.287	0.543	0.559	0.576	0.593	0.610	0.628	0.646	0.664	0.683	0.702	0.722	0.742	0.762	0.783	0.805	0.827
170	13.501	0.534	0.550	0.567	0.583	0.600	0.618	0.635	0.653	0.672	0.691	0.710	0.730	0.750	0.771	0.792	0.814
180	13.715	0.526	0.542	0.558	0.574	0.591	0.608	0.625	0.643	0.661	0.680	0.699	0.719	0.739	0.759	0.780	0.801
190	13.930	0.518	0.533	0.549	0.565	0.582	0.599	0.616	0.633	0.651	0.670	0.688	0.707	0.727	0.747	0.768	0.789
200	14.144	0.510	0.525	0.541	0.557	0.573	0.590	0.606	0.624	0.641	0.659	0.678	0.697	0.716	0.736	0.756	0.777

Atmospheric Corrections Factors Chart

INERGEN AGENT ATMOSPHERIC CORRECTION FACTORS
(NFPA 2001)

Equivalent Altitude	Enclosure Pressure	Atmospheric Correction Factor
–3,000 ft. (914 m)	16.25 psia (84.0 cm Hg)	1.11
–2,000 ft. (609 m)	15.71 psia (81.2 cm Hg)	1.07
–1,000 ft. (305 m)	15.23 psia (78.7 cm Hg)	1.04
0 ft. (000 m)	14.71 psia (76.0 cm Hg)	1.00
1,000 ft. (305 m)	14.18 psia (73.3 cm Hg)	0.96
2,000 ft. (609 m)	13.64 psia (70.5 cm Hg)	0.93
*3,000 ft. (914 m)	13.12 psia (67.8 cm Hg)	0.89
4,000 ft. (1220 m)	12.58 psia (65.0 cm Hg)	0.86
5,000 ft. (1524 m)	12.04 psia (62.2 cm Hg)	0.82
6,000 ft. (1829 m)	11.53 psia (59.6 cm Hg)	0.78
7,000 ft. (2133 m)	11.03 psia (57.0 cm Hg)	0.75
8,000 ft. (2438 m)	10.64 psia (55.0 cm Hg)	0.72
9,000 ft. (2743 m)	10.22 psia (52.8 cm Hg)	0.69
10,000 ft. (3048 m)	9.77 psia (50.5 cm Hg)	0.66

► *NOTE: On systems between +3000 ft. (914 m) and –3000 ft. (914 m), using the Atmospheric Correction Factor is optional.

Distributed by SIRINA
An authorized ANSUL
Distributor

Distributed by SIRINA
An authorized ANSUL
Distributor

Discharge Time Chart (For Class A Fires)

INERGEN SYSTEM DISCHARGE TIME CHART

% Concentration	Time (Seconds)	% Concentration	Time (Seconds)
34.2	40	48.5	142
34.5	43	49.0	145
35.0	48	49.5	148
35.5	55	50.0	151
36.0	61	50.5	154
36.5	64	51.0	157
37.0	67	51.5	160
37.5	70	52.0	160
38.0	74	52.5	160
38.5	77	53.0	160
39.0	80	53.5	160
39.5	83	54.0	160
40.0	87	54.5	160
40.5	90	55.0	160
41.0	94	55.5	160
41.5	97	56.0	160
42.0	100	56.5	160
42.5	104	57.0	160
43.0	108	57.5	160
43.5	111	58.0	160
44.0	114	58.5	160
44.5	118	59.0	160
45.0	121	59.5	160
45.5	124	60.0	160
46.0	127	60.5	160
46.5	130	61.0	160
47.0	133	61.5	160
47.5	136	62.0	160
48.0	139		

NOTE #1: Utilization of these discharge times is necessary to achieve 95% of the minimum design concentration within one minute (34.2%). Discharge time must not exceed 160 seconds (UL) or 120 seconds (FM).

NOTE #2 : Discharge times less than or equal to those shown on this chart are acceptable.

NOTE #3 : For initial design concentrations other than 34.2%, the 90% discharge time to be inputted into the flow program is 40 seconds.

Pipe Size Estimation Chart

MANIFOLD PIPE SIZE

Pipe Size in.	Schedule 80 Maximum Flow Rate cu. ft./min.	Schedule 160 Maximum Flow Rate cu. ft./min.
1/2	438	307
3/4	891	570
1	1607	1108
1 1/4	3118	2500
1 1/2	4484	3461
2	7988	5843
2 1/2	11967	9806
3	19367	15708
4	36498	28724

DOWNSTREAM PIPE SIZE

Pipe Size in.	Short Run (Approx. 20 Ft.) Maximum Flow Rate cu. ft./min.	Long Run (Approx. 100 Ft.) Maximum Flow Rate cu. ft./min.
1/4	185	40
3/8	348	60
1/2	591	100
3/4	1136	200
1	1985	340
1 1/4	3712	630
1 1/2	5260	890
2	9217	1550
2 1/2	13712	2300
3	22269	3720
4	40920	6830
5	68123	11360
6	103486	17260
8	194922	32500

Distributed by SIRINA
An authorized ANSUL
Distributor

Distributed by SIRINA
An authorized ANSUL
Distributor

Maximum Pipe Pressure Chart

Threaded and welded steel pipe, acceptable for use with INERGEN agent systems, has the following acceptable pressure capability based on:

NOTE: In the following Maximum Pipe Pressure Charts, all pipe sizes with pressure ratings in the shaded area comply with the minimum allowable pressure for piping upstream of the pressure reducer.

Schedule 40 Threaded Pipe – Maximum Pressure (psi)

Diameter in.	Grade A-106C* (Seamless) SE 21000	Grade A-53B, A-106B (Seamless) SE 18000	Grade A-53B (ERW) SE 15360	Grade A-53A, A-106A (Seamless) SE 14400	Grade A-53A (ERW) 12240
0.25	3422	2933	2503	2347	1995
0.38	2924	2507	2139	2005	1705
0.5	2593	2222	1896	1778	1511
0.75	2234	1915	1634	1532	1302
1.0	2026	1736	1482	1390	1181
1.25	1782	1528	1304	1222	1038
1.50	1667	1429	1220	1144	972
2.0	1494	1280	1093	1025	871
2.5	1505	1290	1100	1032	877
3.0	1392	1193	1018	954	811
4.0	1278	1096	935	876	745
5.0	1193	1022	872	818	695
6.0	1141	978	834	782	664
8.0	1081	926	790	740	630

* This grade pipe may be difficult and expensive to get. Consult pipe supplier before accepting flow calculation maximum down stream pressure results.

Distributed by SIRINA
An authorized ANSUL
Distributor

Maximum Pipe Pressure Chart

PIPE PRESSURE (Continued)

Schedule 80 Threaded Pipe – Maximum Pressure (psi)

Diameter in.	Grade A-106C* (Seamless) SE 21000	Grade A-53B, A-106B (Seamless) SE 18000	Grade A-53B (ERW) SE 15360	Grade A-53A, A-106A (Seamless) SE 14400	Grade A-53A (ERW) 12240
0.25	5833	5000	4267	4000	3400
0.38	5102	4373	3732	3499	2974
0.5	4493	3851	3286	3080	2618
0.75	3874	3320	2833	2657	2258
1.0	3495	2996	2556	2397	2037
1.25	3073	2634	2248	2107	1792
1.5	2883	2472	2110	1978	1681
2.0	2625	2250	1920	1800	1530
2.5	2571	2204	1882	1764	1499
3.0	2400	2057	1756	1645	1399
4.0	2212	1896	1618	1517	1289
5.0	2076	1780	1518	1423	1210
6.0	2105	1804	1540	1442	1226
8.0	1948	1669	1424	1336	1135

For welded pipe or roll grooved pipe (fitting restricts pressure capability for roll grooved pipe):

Schedule 40 Welded – Maximum Pressure (psi)

Diameter in.	Grade A-106C* (Seamless) SE 21000	Grade A-53B, A-106B (Seamless) SE 18000	Grade A-53B (ERW) SE 15360	Grade A-53A, A-106A (Seamless) SE 14400	Grade A-53A (ERW) 12240
0.25	6844	5867	5006	4693	3989
0.38	5662	4853	4142	3883	3300
0.5	5450	4672	3986	3737	3176
0.75	4520	3875	3306	3100	2634
1.0	4248	3641	3107	2912	2475
1.25	3542	3036	2591	2429	2064
1.50	3205	2747	2344	2197	1868
2.0	2723	2334	1992	1867	1588
2.5	2965	2542	2168	2033	1728
3.0	2592	2221	1896	1777	1511
4.0	2212	1896	1618	1516	1289
5.0	1948	1669	1424	1336	1135
6.0	1775	1522	1298	1217	1034
8.0	1568	1344	1147	1075	914

Schedule 80 Welded – Maximum Pressure (psi)

Diameter in.	Grade A-106C* (Seamless) SE 21000	Grade A-53B, A-106B (Seamless) SE 18000	Grade A-53B (ERW) SE 15360	Grade A-53A, A-106A (Seamless) SE 14400	Grade A-53A (ERW) 12240
0.25	9256	7933	6770	6347	5395
0.38	7840	6720	5734	5376	4570
0.5	7350	6300	5376	5040	4284
0.75	6160	5280	4506	4224	3590

* This grade pipe may be difficult and expensive to get. Consult pipe supplier before accepting flow calculation maximum down stream pressure results.

Distributed by SIRINA
An authorized ANSUL
Distributor

Maximum Pipe Pressure Chart

PIPE PRESSURE (Continued)

Schedule 80 Welded – Maximum Pressure (psi) (Continued)

Diameter in.	Grade A-106C* (Seamless) SE 21000	Grade A-53B, A-106B (Seamless) SE 18000	Grade A-53B (ERW) SE 15360	Grade A-53A, A-106A (Seamless) SE 14400	Grade A-53A (ERW) 12240
1.0	5717	4900	4182	3920	3332
1.25	4833	4142	3535	3314	2816
1.5	4421	3789	3234	3032	2576
2.0	3855	3304	2820	2644	2248
2.5	4032	3456	2949	2765	2350
3.0	3600	3086	2633	2469	2098
4.0	3145	2696	2301	2157	1834
5.0	2831	2427	2071	1941	1650
6.0	2739	2347	2003	1878	1596
8.0	2435	2087	1781	1670	1420

Schedule 160 Threaded Pipe – Maximum Pressure (psi)

Diameter in.	Grade A-106C* (Seamless) SE 21000	Grade A-53B, A-106B (Seamless) SE 18000	Grade A-53B (ERW) SE 15360	Grade A-53A, A-106A (Seamless) SE 14400	Grade A-53A (ERW) SE 12240
0.5	6500	5571	4754	4457	3789
0.75	6440	5520	4710	4416	3754
1.0	5749	4928	4205	3942	3351
1.25	4554	3904	3331	3123	2654
1.5	4664	3998	4312	3198	2719
2.0	4828	4138	3531	3310	2814
2.5	4017	3443	2938	2755	2342
3.0	4044	3466	2958	2773	2357
4.0	4023	3448	2942	2758	2345
5.0	3964	3397	2899	2718	2310
6.0	3918	3358	2866	2687	2284
8.0	3925	3364	2871	2691	2288

Schedule 160 Welded Pipe – Maximum Pressure (psi)

Diameter in.	Grade A-106C* (Seamless) SE 21000	Grade A-53B, A-106B (Seamless) SE 18000	Grade A-53B (ERW) SE 15360	Grade A-53A, A-106A (Seamless) SE 14400	Grade A-53A (ERW) SE 12240
0.5	9350	8014	6839	6411	5450
0.75	8720	7474	6378	5979	5083
1.0	7985	6844	5840	5475	4654
1.25	6325	5422	4627	4337	3687
1.5	6212	5324	4543	4259	3620
2.0	6066	5199	4437	4159	3535
2.5	5478	4696	4007	3757	3193
3.0	5244	4495	3836	3596	3057
4.0	4956	4248	3625	3398	2889
5.0	4719	4045	3451	3236	2750
6.0	4552	3902	3329	3121	2653
8.0	4412	3782	3227	3025	2571

* This grade pipe may be difficult and expensive to get. Consult pipe supplier before accepting flow calculation maximum down stream pressure results.

Distributed by SIRINA
An authorized ANSUL
Distributor

Equivalent Length Chart

Equivalent Lengths Listed in Feet

Pipe Size	Pipe ID (Inches)	Standard 90° Elbow*	Standard Tee Through Run	Standard Tee Side Branch	Union/ Coupling	Check Valves	Selector Valves
1/4 SCH 40	0.364	0.9	0.6	1.8	0.2	—	—
3/8 SCH 40	0.493	1.2	0.8	2.5	0.2	—	—
1/2 SCH 40	0.622	1.6	1.0	3.1	0.3	24	3.6
3/4 SCH 40	0.824	2.1	1.4	4.1	0.3	42	10.5
1 SCH 40	1.049	2.6	1.7	5.2	0.4	—	15.0
1 1/4 SCH 40	1.38	3.5	2.3	6.9	0.6	—	22.0
1 1/2 SCH 40	1.61	4.0	2.7	8.1	0.7	—	31.5
2 SCH 40	2.067	5.2	3.4	10.3	0.9	—	92.0**
2 1/2 SCH 40	2.469	6.2	4.1	12.3	1.0	—	58.0
3 SCH 40	3.068	7.7	5.1	15.3	1.3	—	102.0
4 SCH 40	4.026	10.1	6.7	20.1	1.7	—	142.0
5 SCH 40	5.047	12.6	8.4	25.2	2.1	—	—
6 SCH 40	6.065	15.2	10.1	30.3	2.5	—	—
8 SCH 40	7.981	20.0	13.3	39.9	3.3	—	—
1/2 SCH 80	0.546	1.4	0.9	2.7	0.2	12	1.9
3/4 SCH 80	0.742	1.9	1.2	3.7	0.3	24	6.4
1 SCH 80	0.957	2.4	1.6	4.8	0.4	28	10.4
1 1/4 SCH 80	1.278	3.2	2.1	6.4	0.5	43	16.2
1 1/2 SCH 80	1.5	3.8	2.5	7.5	0.6	51	22.4
2 SCH 80	1.939	4.8	3.2	9.7	0.8	48	67.4***
2 1/2 SCH 80	2.323	5.8	3.9	11.6	1.0	60	43.0
3 SCH 80	2.9	7.3	4.8	14.5	1.2	154	78.0
4 SCH 80	3.826	9.6	6.4	19.1	1.6	—	111.0
5 SCH 80	4.813	12.0	8.0	24.1	2.0	—	—
6 SCH 80	5.761	14.4	9.6	28.8	2.4	—	—
8 SCH 80	7.625	19.1	12.7	38.1	3.2	—	—
1/2 160T	0.466	1.2	0.8	2.3	0.2	—	—
3/4 160T	0.612	1.5	1.0	3.1	0.3	—	—
1 160T	0.815	2.0	1.4	4.1	0.3	—	—
1 1/4 160T	1.16	2.9	1.9	5.8	0.5	—	—
1 1/2 160T	1.338	3.3	2.2	6.7	0.6	—	—
2 160T	1.687	4.2	2.8	8.4	0.7	—	—
2 1/2 160T	2.125	5.3	3.5	10.6	0.9	—	—
3 160T	2.624	6.6	4.4	13.1	1.1	—	—
4 160T	3.438	8.6	5.7	17.2	1.4	—	—
5 160T	4.313	10.8	7.2	21.6	1.8	—	—
6 160T	5.187	13.0	8.6	25.9	2.2	—	—
8 160T	6.813	17.0	11.4	34.1	2.8	—	—

NOTE: Reference Crane Flow of Fluids, 1957, Page A-30

* Equivalent length for 45° elbow is equal to 1/2 the equivalent length stated for 90° elbow.

** 2 in. flanged selector valve equivalent length is 21.9 ft.

*** 2 in. flanged selector valve equivalent length is 17.0 ft.

Nozzle/Pressure Reduce Range Chart

List based on actual drill sizes and min/max allowable vs. ability to machine

Designer Program (Unbalanced)

	Nozzle Range								Manifold Orifice					
	Schedule 80				Schedule 40				Schedule 160			Schedule 80		
	UL		FM		UL		FM		UL	FM	UL & FM	UL	FM	UL & FM
Size	Min	Max	Min	Max	Min	Max	Min	Max	Min	Min	Max	Min	Min	Max
0.25	Not allowed		Not allowed		0.042	0.250	0.055	0.218	– –	– –	– –	– –	– –	– –
0.375	Not allowed		Not allowed		0.062	0.343	0.076	0.296	– –	– –	– –	– –	– –	– –
0.5	0.063	0.375	0.082	0.328	0.073	0.375	0.093	0.368	0.062	0.070	0.250	0.073	0.082	0.296
0.75	0.086	0.515	0.111	0.437	0.096	0.562	0.120	0.484	0.081	0.093	0.332	0.096	0.111	0.406
1	0.110	0.656	0.144	0.562	0.125	0.718	0.157	0.625	0.106	0.125	0.437	0.125	0.144	0.515
1.25	0.147	0.890	0.193	0.765	0.159	0.953	0.209	0.828	0.152	0.177	0.625	0.166	0.193	0.703
1.5	0.173	1.046	0.228	0.890	0.185	1.125	0.242	0.953	0.177	0.201	0.734	0.196	0.228	0.812
2	0.228	1.343	0.295	1.156	0.238	1.437	0.312	1.234	0.221	0.257	0.921	0.257	0.295	1.000
2.5	0.272	1.626	0.348	1.390	0.290	1.728	0.375	1.468	0.277	0.323	1.156	0.302	0.348	1.265
3	0.339	2.030	0.437	1.740	0.358	2.148	0.468	1.841	0.343	0.397	1.437	0.377	0.437	1.595
4	– –	– –	– –	– –	– –	– –	– –	– –	0.453	– –	1.891*	0.500	– –	2.104*

INERGEN Designer – Balanced

	Nozzle Range				Manifold Orifice			
	UL & FM				UL & FM			
	Schedule 80		Schedule 40		Schedule 160		Schedule 80	
Size	Min	Max	Min	Max	Min	Max	Min	Max
0.25	Not allowed		0.040	0.250	– –	– –	– –	– –
0.375	Not allowed		0.040	0.375	– –	– –	– –	– –
0.5	0.040	0.375	0.046	0.375	0.040	0.368	0.040	0.375
0.75	0.052	0.562	0.059	0.562	0.043	0.484	0.052	0.562
1	0.067	0.718	0.073	0.718	0.059	0.640	0.067	0.718
1.25	0.089	1.000	0.098	1.000	0.081	0.921	0.089	1.000
1.5	0.106	1.187	0.113	1.250	0.096	1.062	0.106	1.187
2	0.136	1.551	0.147	1.625	0.120	1.343	0.136	1.551
2.5	0.166	1.858	0.173	1.750	0.149	1.700	0.166	1.858
3	0.203	2.320	0.218	2.250	0.185	2.101	0.203	2.320
4	– –	– –	– –	– –	0.242*	2.750*	0.272*	3.061*

* UL/ULC Listed Only.

Distributed by SIRINA
An authorized ANSUL
Distributor

Installation

All installations are to be performed in accordance with the parameters of this manual and all appropriate codes and standards from the local, state, and federal authority having jurisdiction.

Before the INERGEN® system is installed, the qualified installer should develop installation drawings in order to locate the equipment, to determine an actuation and distribution piping routing, and to develop a bill of material.

For successful system performance, the INERGEN system components must be located within their approved temperature ranges. The ambient temperature range is 32 °F to 130 °F (0 °C to 54 °C). All AUTOPULSE® Control Systems are designed for indoor applications and for temperature ranges between 32 °F to 120 °F (0 °C to 49 °C).

MOUNTING COMPONENTS

Cylinder/Bracket Assembly

INERGEN cylinders may be located inside or outside the protected space, although it is preferable to locate them outside of the space. They must not be located where they will be exposed to a fire or explosion in the hazard. When they are installed within the space they protect, a remote manual control must be installed to release the system safely from outside the hazard area.

The cylinders should be installed so that they can be easily removed after use for recharging. Cylinders must be installed indoors. Do not install the cylinders where they are exposed to direct sun rays. Cylinders may be installed horizontal if properly bracketed.

See Figures 1 through 4 for detailed mounting height information for all cylinder bracketing.

Bracketing Without Uprights – Single Cylinder

Clamp Installation – INERGEN Cylinder Assembly

Cylinder Size		Dimension A		Dimension B		Dimension C		Dimension D	
cu. ft.	(cu. m)	in.	(cm)	in.	(cm)	in.	(cm)	in.	(cm)
200	(5.7)	12	(31)	26	(66)	9 3/4	(25)	12 3/4	(32)
250	(7.1)	12	(31)	29	(74)	10 1/2	(27)	13 1/2	(34)
350	(9.9)	12	(31)	31	(79)	12	(31)	15 1/8	(38)
▸ 425	(12.0)	14	(36)	38	(97)	12	(31)	15 1/8	(38)
▸ 435	(12.3)	14	(36)	38	(97)	12 7/16	(32)	15 9/16	(40)

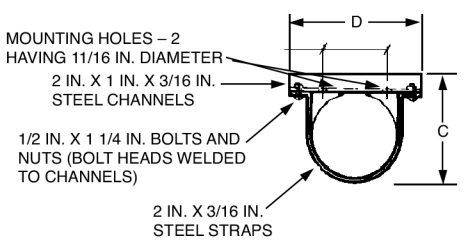

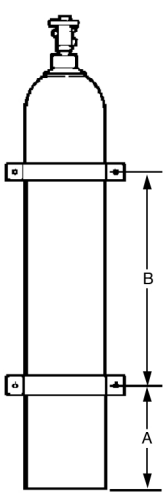

FIGURE 1
001868

Distributed by SIRINA
An authorized ANSUL
Distributor

Installation

MOUNTING COMPONENTS (Continued)

Bracketing Without Uprights – Single Row

Bracketing Installation – INERGEN Cylinder Assembly

Cylinder Size		Dimension A		Dimension B	
cu. ft.	(cu. m)	in.	(cm)	in.	(cm)
200	(5.7)	31	(79)	11	(28)
250	(7.1)	34	(86)	11 1/2	(29)
350	(9.9)	36	(91)	13	(33)
▸ 425	(12.0)	41 1/2	(105)	13	(33)
435	(12.3)	38 1/2	(98)	13 7/16	(34.5)

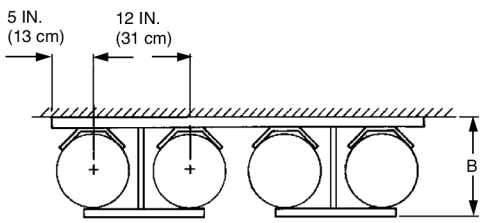

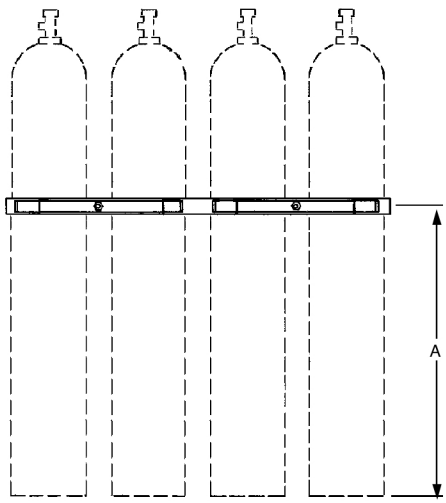

FIGURE 2

002260

Bracketing Without Uprights – Double Row

Bracketing Installation – INERGEN Cylinder Assembly

Cylinder Size		Dimension A		Dimension B	
cu. ft.	(cu. m)	in.	(cm)	in.	(cm)
200	(5.7)	31	(79)	21	(53)
250	(7.1)	34	(86)	22 1/2	(57)
350	(9.9)	36	(91)	26	(66)
▸ 425	(12.0)	41 1/2	(105)	26	(66)
435	(12.3)	38 1/2	(98)	26 7/8	(68)

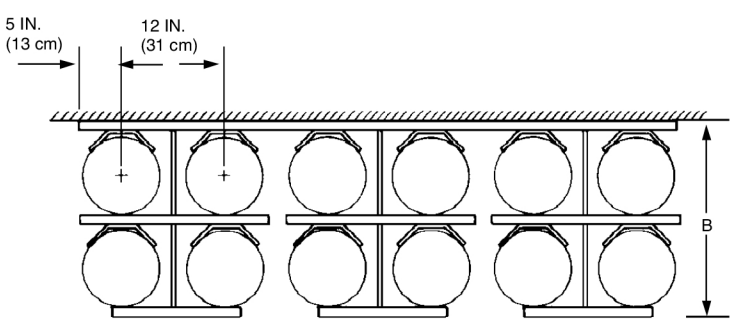

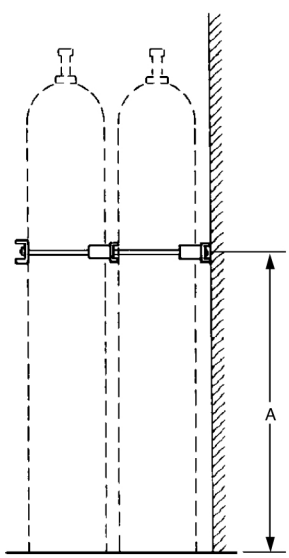

FIGURE 3

001869

Distributed by SIRINA
An authorized ANSUL
Distributor

Installation

MOUNTING COMPONENTS (Continued)

Bracketing With Uprights – Back To Back

Bracketing Installation – INERGEN Cylinder Assembly

Cylinder Size		Dimension A		Dimension B		Dimension C	
cu. ft.	(cu. m)	in.	(cm)	in.	(cm)	in.	(cm)
200	(5.7)	31	(79)	25	(64)	80	(203)
250	(7.1)	34	(86)	26	(66)	80	(203)
350	(9.9)	36	(91)	29	(74)	80	(203)
▸ 425	(12.0)	41 1/2	(105)	29	(74)	85	(216)
435	(12.3)	38 1/2	(98)	30	(76)	80	(203)

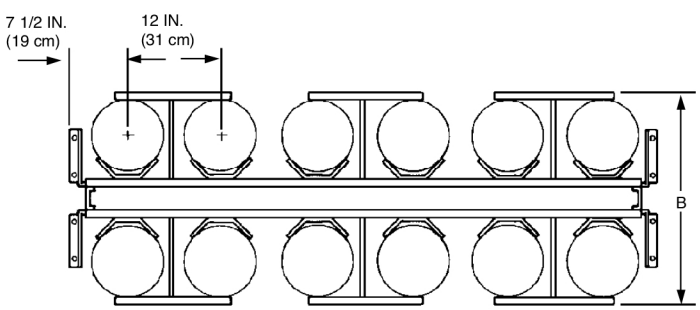

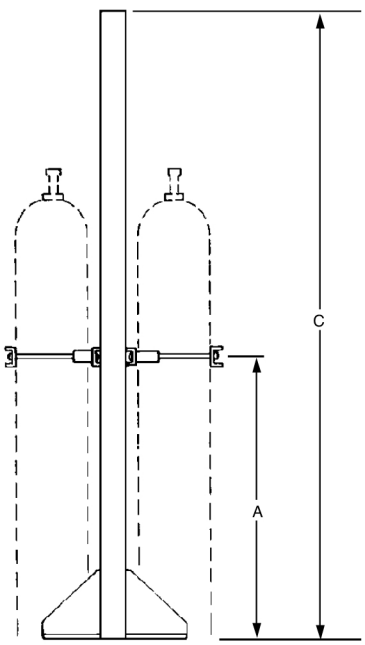

FIGURE 4a
001870

Bracketing With Uprights – Double Row Back To Back

Bracketing Installation – INERGEN Cylinder Assembly

Cylinder Size		Dimension A		Dimension B		Dimension C	
cu. ft.	(cu. m)	in.	(cm)	in.	(cm)	in.	(cm)
200	(5.7)	31	(79)	45	(114)	80	(203)
250	(7.1)	34	(86)	48	(122)	80	(203)
350	(9.9)	36	(91)	55	(140)	80	(203)
425	(12.0)	41 1/2	(105)	55	(140)	85	(216)
435	(12.3)	38 1/2	(98)	56 3/4	(144)	80	(203)

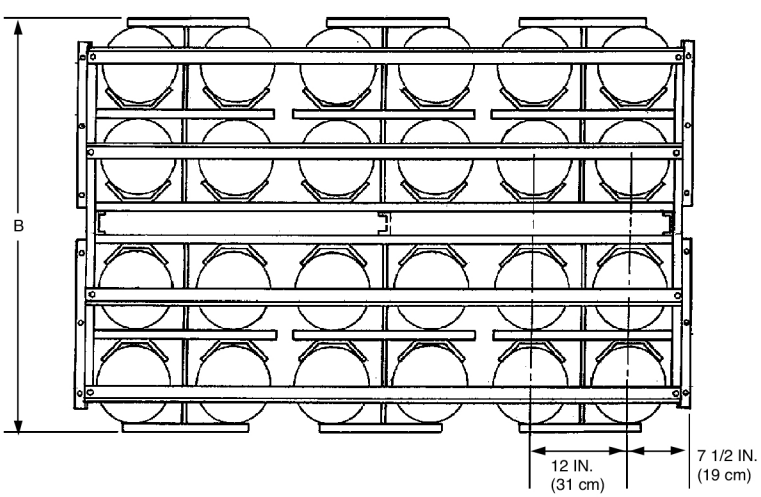

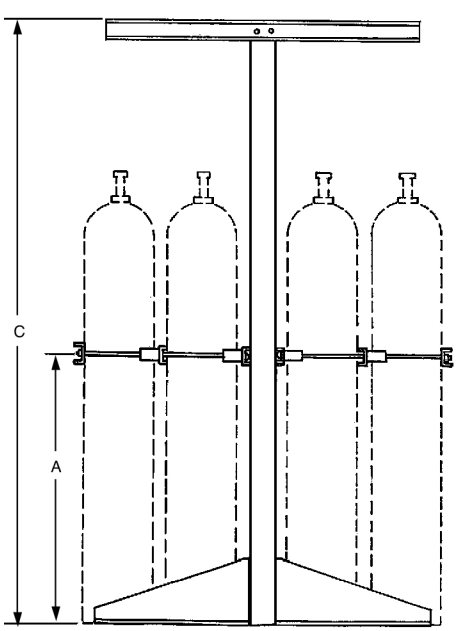

FIGURE 4b
003696

Distributed by SIRINA
An authorized ANSUL
Distributor

Installation

MOUNTING COMPONENTS (Continued)

1. Mount each INERGEN cylinder by completing the following:

> **⚠ CAUTION**
>
> Do not remove the safety shipping caps at this time. They are provided to prevent accidental actuation and discharge during shipping and handling. If valve assembly is accidentally operated, velocity of unrestricted escaping gas is forceful enough to cause injury, especially about the face and head.

   a. Assemble bracket components. See Parts List, F-9359, F-9360, and F-9361, located in the Appendix Section, for details of cylinder bracketing and component assembly.

   b. If a reserve system is being installed, mount the reserve cylinder(s) directly next to the main system cylinder(s).

> **⚠ CAUTION**
>
> Proper fasteners must be used when mounting cylinder bracketing to wall or support. Failure to properly mount could cause cylinder movement upon discharge.

   c. Securely mount bracketing to rigid wall or support.

   d. Fasten cylinder(s) securely in bracketing.

Releasing Devices

Different types of Releasing/Detection systems are available with the INERGEN system:

– ANSUL AUTOMAN® II-C release using thermal detectors with pneumatic actuation.

– AUTOPULSE Control System using electric detection with electric actuation.

– AUTOPULSE Control System with electric detection utilizing an ANSUL AUTOMAN II-C release for pneumatic actuation.

For detailed information on detection systems, refer to the following:

Ansul Detection and Control Application Manual

NFPA 72–National Fire Alarm Code

NFPA 70–National Electrical Code

INSTALLING ACTUATION PIPING

Before installing any actuation piping, the piping design must be determined. This will confirm that the lengths of actuation piping does not exceed the maximum allowable.

General Piping Requirements

1. Use only 1/4 in. Schedule 40 black iron, hot-dipped galvanized, chrome-plated, or stainless steel pipe/braided hose and fittings conforming to ASTM A120, A53, or A106.
2. The maximum length of all 1/4 in. Schedule 40 pipe is 100 ft. (30.5 m).
3. Before assembling the pipe and fittings, make certain all ends are carefully reamed and blown clear of chips and scale. Inside of pipe and fittings must be free of oil and dirt.
4. The piping and fitting connections must be sealed with pipe tape. When applying pipe tape, start at the second male thread and wrap the tape (two turns maximum) clockwise around the threads, away from the pipe opening.

> **NOTICE**
>
> Do not allow tape to overlap the pipe opening, as this could cause possible blockage of the gas pressure. Thread sealant or compound must not be used.

5. Cast iron pipe and fittings are not acceptable.
6. Actuation piping must be rigidly supported by UL listed hangers as described on Page 6-5, or the FMRC Approval Guide.

INSTALLING ACTUATION PIPING (Continued)

Actuation Piping Installation

1. Install 1/4 in. Schedule 40 pipe from gas outlet port on the ANSUL AUTOMAN II-C release to cylinder location. Use one of the 1/2 in. (1.3 cm) knockouts provided in the top, bottom, or side of the enclosure to exit the piping.
2. If pneumatic operated accessories are required to be operated from the actuation pressure, branch off the 1/4 in. actuation piping and run to each accessory.
3. Install 1/4 in. tee in the actuation piping approximately 24 in. (61 cm) before first INERGEN cylinder and install vent plug, Part No. 42175. See Figure 5.
4. Install actuation hose, Part Nos. 31809, 32335, or 32336 (depending on length required) between actuation piping and either pneumatic actuator or INERGEN valve. A 1/4 in. male connector, Part No. 32338, is required on each end of the actuation hose. See Figure 5.
5. A 1/4 in. check valve, Part No. 825627, must be installed between the 1/4 in. vent plug and the INERGEN cylinder as shown in Figure 5.

Distributed by SIRINA
An authorized ANSUL
Distributor

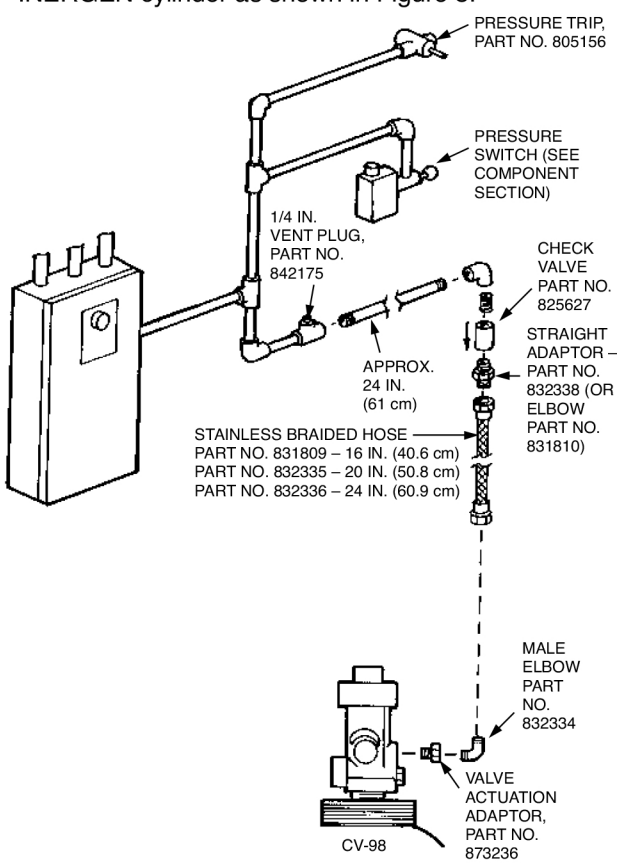

FIGURE 5
004434

Distributed by SIRINA
An authorized ANSUL
Distributor

Installation

INSTALLING DISTRIBUTION PIPING

Hanger Applications

Install the pipe hangers in accordance with good piping practice as well as the following:

1. The maximum spacing between hangers must not exceed those listed below.

Pipe Size in. NPT	Maximum Spacing Between Hangers ft.	(m)
1/4	4	(1.2)
1/2	6	(1.8)
3/4	8	(2.4)
1	12	(3.7)
1 1/4	12	(3.7)
1 1/2 and larger	15	(4.6)

2. A hanger should be installed between fittings when the fittings are more than 2 ft. (.6 m) apart.
3. A hanger should be installed at a maximum of 1 ft. (.3 m) from the nozzle. It must be located to keep nozzle from moving vertically.
4. The hangers must be UL listed or FMRC approved and rigidly supported. The Hanger Application Table and Figure 6 list some typical hangers used for different mounting surfaces.

Hanger Application Table

Hanger Type	Application
No. 1	For attaching to wood beams
No. 2	On level ceilings of sufficient thickness to permit proper fastening
No. 3	For 2 in. and smaller pipe under sloping ceilings and roofs
No. 4	For special cases where punching is more economical than using clamps
No. 5	For sheathed ceilings of wood construction with sufficient thickness
No. 6	For most cases except where plastering is done after installation
No. 7	For attaching to concrete beams
No. 8	For attaching to lower flange of beam or truss
No. 9	To keep piping closer to beam than is possible with clamp and ring
No. 10	Suitable for 3/4 to 2 in. pipe where necessary to hang pipe at a distance from wall
No. 11	For attaching to channel iron
No. 12	For attaching to bottom of steel beams

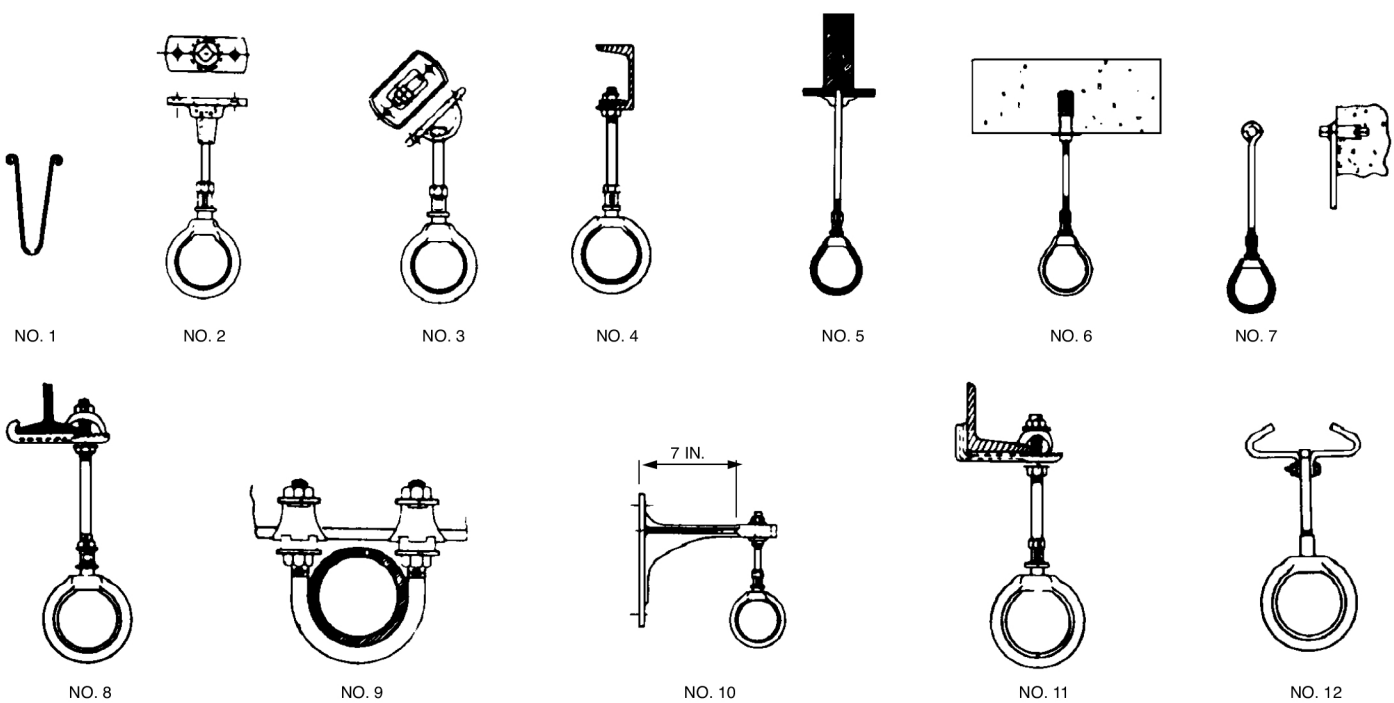

FIGURE 6

001875

Distributed by SIRINA
An authorized ANSUL
Distributor

INSTALLING DISTRIBUTION PIPING (Continued)

General Piping Requirements

NOTE: Actual grades and sizes will depend on maximum downstream pressure from the flow calculation.

1. All threaded pipe beyond the pressure reducer, or selector valve, if applicable, to be black iron or galvanized of the following pipe size and grade combinations.

ASTM A-106, Seamless, Grade C	Sch. 40-through 8 in.
ASTM A-106/A-53 Seamless, Grade B	Sch. 40-through 5 in.
ASTM A-106/A-53 Seamless, Grade A	Sch. 40-through 2.5 in.
ASTM A-53 ERW, Grade B	Sch. 40-through 3 in.
ASTM A-53 ERW, Grade A	Sch. 40-through 1.25 in.

2. All threaded pipe used to construct the manifold, including pipe before the pressure reducer, to be black iron or galvanized of the following pipe size and grade combinations.

ASTM A-106 Seamless, Grade C	Sch. 80-through 4.0 in.
ASTM A-106/A-53 Seamless, Grade B	Sch. 80-through 2.5 in.
ASTM A-106/A-53 Seamless, Grade A	Sch. 80-through 1.0 in.
ASTM A-53 ERW, Grade B	Sch. 80-through 1.25 in.
ASTM A-53 ERW, Grade A	Sch. 80-through .75 in.
ASTM A-106 Seamless, Grade C	Sch. 160-through 8 in.
ASTM A-106/A-53 Seamless, Grade B	Sch. 160-through 8 in.
ASTM A-106/A-53 Seamless, Grade A	Sch. 160-through 8 in.
ASTM A-53 ERW, Grade B	Sch. 160-through 8 in.
ASTM A-53 ERW, Grade A	Sch. 160-through 8 in.

3. All fittings beyond the pressure reducer to be 300 lb. ANSI B-16.3 black malleable iron or galvanized threaded fittings through 3 in. size. Forged steel fittings to be used for larger sizes. All flanged joints to be Class 600 lb. (Class 300 malleable iron unions or street elbows shall not be used.)
4. All fittings used to construct the manifold, including fittings before the pressure reducer, to be black iron or galvanized 2000 or 3000 psi ANSI B-16.11.
5. A120 pipe SHALL NOT BE USED.
6. Cylinder and piping to be securely bracketed – especially at the fittings and nozzles.
7. Ream, clean, and blow out all pipe before installing.
8. All dead end pipe lines to be provided with a capped nipple, 2 in. long. See Figure 7.

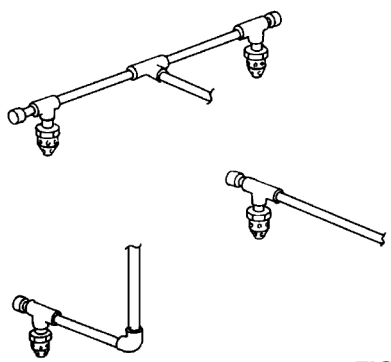

FIGURE 7
001876

9. All pipe lengths are measured center to center of fittings.
10. All distribution pipe and fittings must be assembled using either pipe tape or pipe dope. Do not add to the first two threads nearest the end of the pipe.
11. Install pressure reducer/union in the piping with the orifice identification tab on the pressure inlet side of the system. The 1 1/4 in., 1 1/2 in., and 2 in. pressure reducer/union must be installed per the direction of the flow arrow stamped on the body.
12. Critical length from pressure reducer to first tee must be a minimum of 10 nominal pipe diameter.
13. Refer to “Pipe Pressure Rating Chart,” Pages 5-15 – 5-17, in Design section for selection of the correct pressure rated pipe.
14. Size reductions can be accomplished with the use of reducing bushings, reducing couplings, reducing tees, or reducing elbows.
15. Bushing up (increasing pipe size) in the downstream piping is acceptable immediately after the pressure reducer only. Increase in size can be no greater than two nominal pipe sizes. Only the use of a close nipple and reducing coupling or a swaged nipple can be used.
16. Pressure reducer must be the same size as the system manifold outlet pipe size.

Distributed by SIRINA
An authorized ANSUL
Distributor

Installation

INSTALLING DISTRIBUTION PIPING (Continued)

General Piping Requirements (Continued)

17. Nozzles to be located at the top of the hazard area, aimed downward.
18. Make certain the I.D. of all 1/4 in. piping used in the agent distribution system is within manufacturer's tolerance. Undersized I.D. of pipe will cause pressure and agent flow problems.
19. Maximum amount of pipe and elbows between any tee in the manifold is 20 ft. (6.1 m) and 9 – 90° elbows. See Fig. 7.1.
20. Total amount of pipe allowed between the manifold distribution tee and all pressure reducers is 100 ft. (30.5 m). Also, each run allows a maximum of 9-90° elbows. See Fig. 7-1.
21. On installations requiring Ansul flanged components, the flange gasket material must be 304 stainless steel Flextite Super Style CG 304.
22. The following torque specifications are required when using flanged components:

Bolt Dia.	Torque	
5/8 in.	89 ft. lbs.	(120.7 Nm)
3/4 in.	107 ft. lbs.	(145.1 Nm)
7/8 in.	162 ft. lbs.	(219.6 Nm)
1 in.	244 ft. lbs.	(330.8 Nm)
1 1/8 in.	322 ft. lbs.	(436.6 Nm)
1 1/4 in.	410 ft. lbs.	(555.9 Nm)

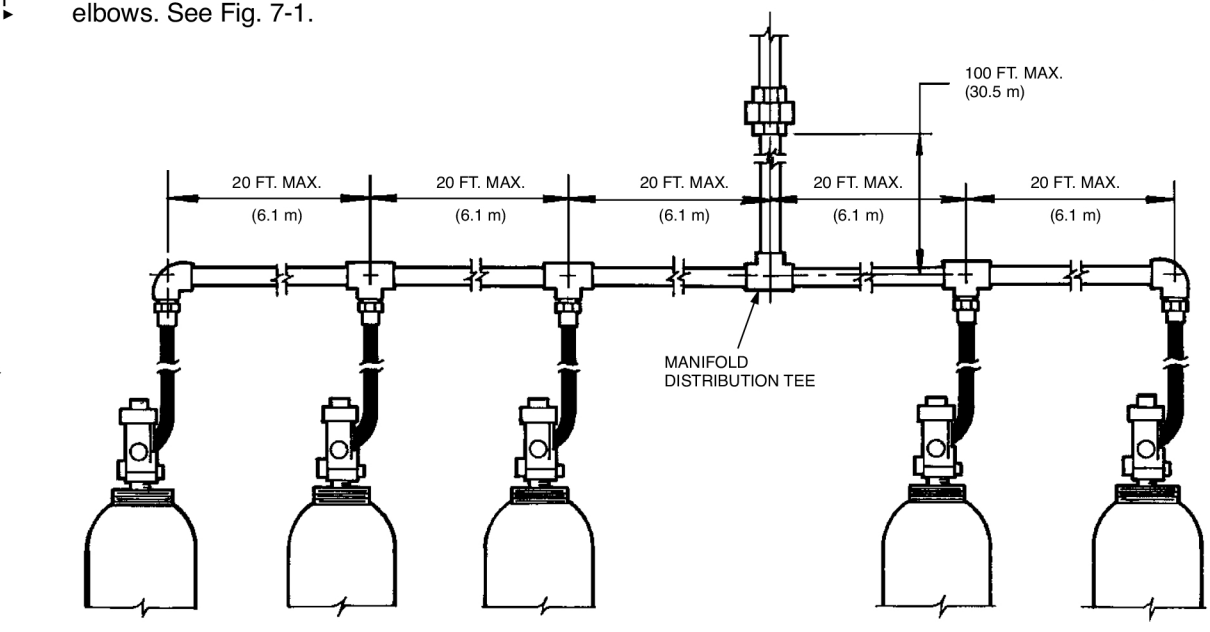

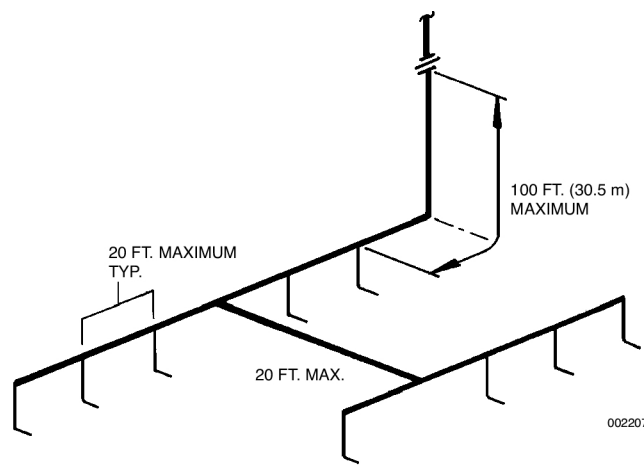

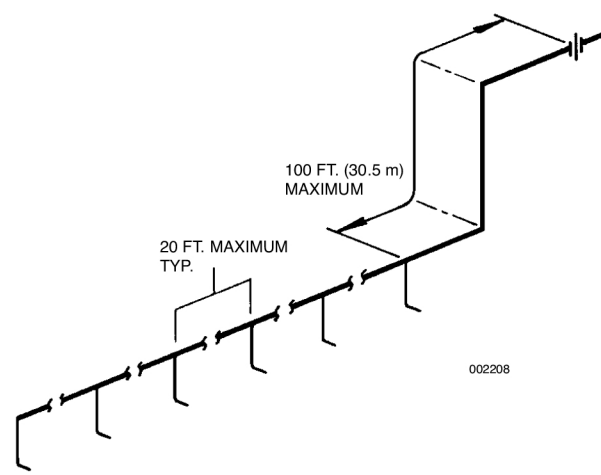

FIGURE 7.1

Distributed by SIRINA
An authorized ANSUL
Distributor

INSTALLING DISTRIBUTION PIPING (Continued)

Distribution Manifold And Piping

1. Starting with the cylinder manifold, securely mount the manifold at the appropriate height as shown in Figure 8. Make certain that if accessories piping is to be done later that the end of the manifold contains a tee instead of an elbow. The outlet of the tee will later be reduced down to 1/4 in. for piping to the accessories.

Manifold Height and Spacings

Cylinder Size		Dimension A		Dimension B		Dimension C		Dimension D		Dimension E	
cu. ft.	(cu. m)	in.	(cm)	in.	(cm)	in.	(cm)	in.	(cm)	in.	(cm)
200	(5.7)	64 1/2	(164)	65	(165)	12	(31)	12	(31)	12	(31)
250	(7.1)	69 1/2	(177)	70	(178)	12	(31)	12	(31)	12	(31)
350	(9.9)	72	(183)	72 1/2	(184)	12	(31)	12	(31)	12	(31)
425	(12.0)	83	(211)	83 1/2	(212)	12	(31)	12	(31)	12	(31)
▸ 435	(12.3)	79	(201)	79 1/2	(202)	12	(31)	12	(31)	12	(31)

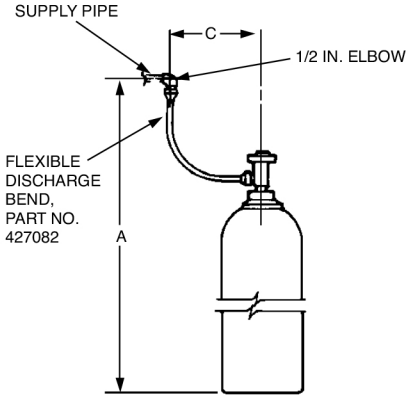

1 Cylinder

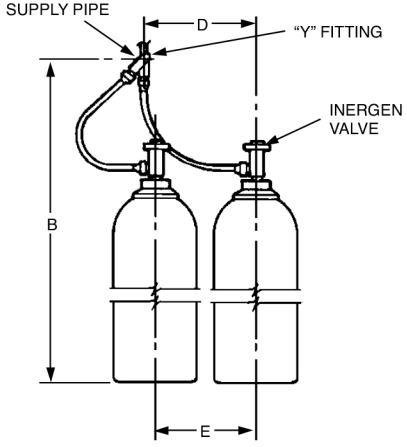

2 Cylinders

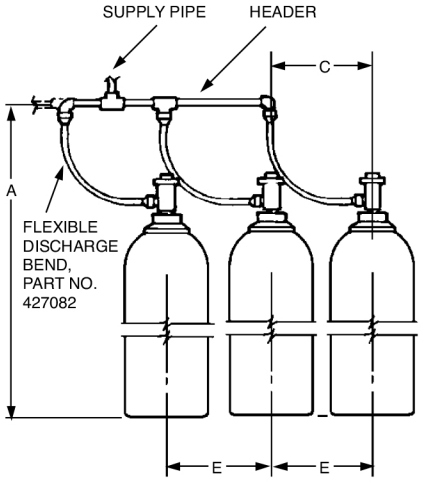

3 Cylinders

FIGURE 8

002209

Distributed by SIRINA
An authorized ANSUL
Distributor

Installation

INSTALLING DISTRIBUTION PIPING (Continued)

Distribution and Manifold Piping (Continued)

2. The maximum number of cylinders that can be back pressure actuated from a pilot or set of pilot cylinders is 40. When more than 40 cylinders are required, up to 12 additional sets of pilot cylinders (each operating 40 cylinders) can be pneumatically actuated from a pilot manifold. See Figure 8.1

   The installation guidelines that must be followed are:

   - 1/4 in. Schedule 80 pipe ASTM A-53 ERW or seamless grade A or B, or Grades A106 A, B or C and 2000/3000 psi fittings (ANSI B-16.11) must be used on actuation manifold.
   - Maximum length of actuation manifold is 55 ft. (16.8 m).
   - Maximum of 12 pilots valves can be actuated from actuation manifold.
   - Actuation manifold must start from pilot manifold as far from the distribution pressure reducer as possible.
   - The actuated pilot valve must be located in the distribution manifold as far from the distribution pressure reducer as possible.
   - When piping the actuation manifold to the pilot valve(s), use Straight Adaptor, Part No. 832338 (or elbow Part No. 831810), Stainless Braided Hose, Part No. 831809, 832335, or 832336, Male Elbow, Part No. 832334, and Valve Actuation Adaptor, Part No. 873236.
   - Ball and spring **must** remain in all valves. **NOTE:** Valves manufactured before or during March 1995 have a removable ball and spring. Valves manufactured after March 1995 have a captured ball and spring.
   - Refer to Step No. 25, “Additional Secondary Pilot Cylinder Requirements” in Design Section, for additional design information.

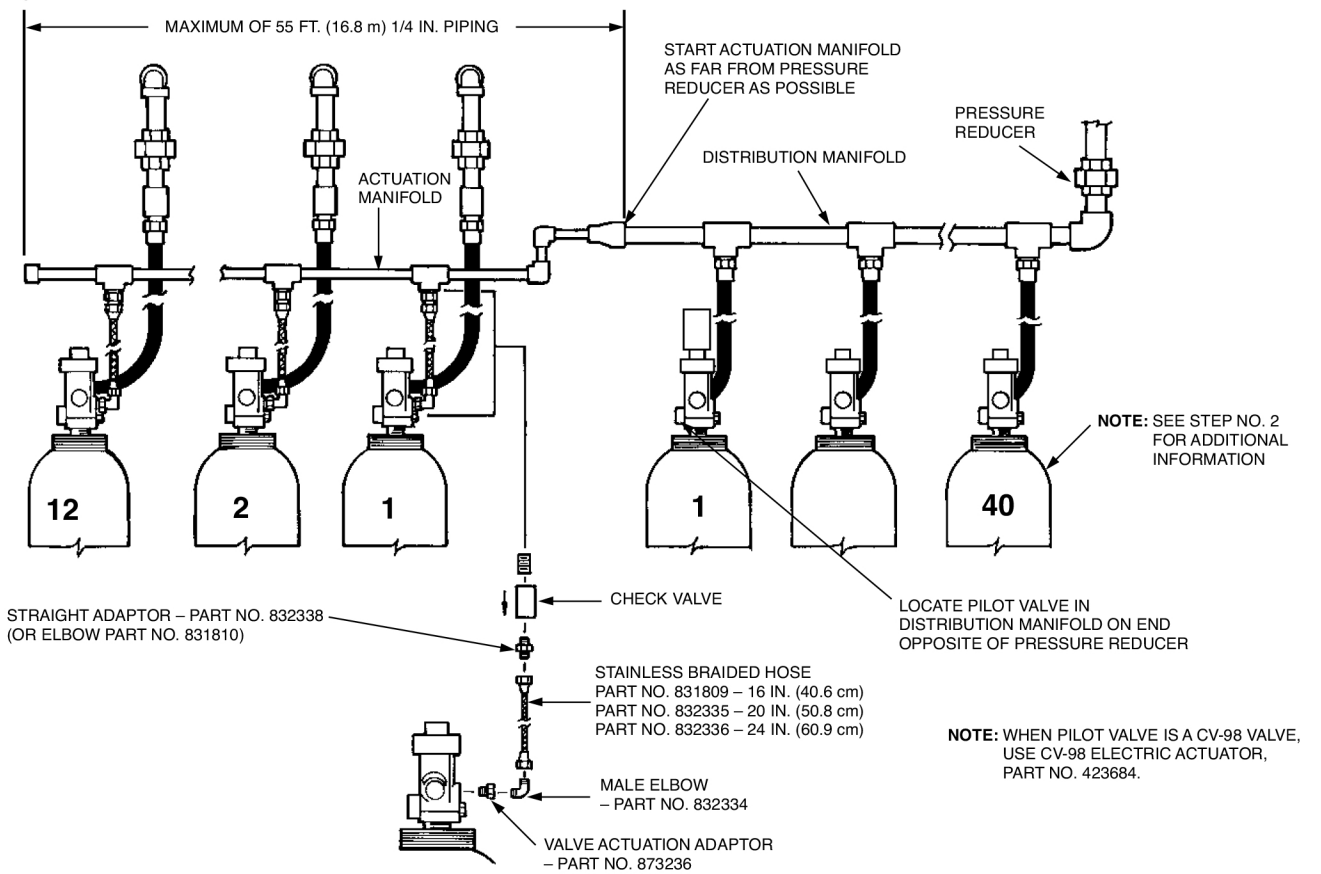

FIGURE 8.1
002210

Distributed by SIRINA
An authorized ANSUL
Distributor

Installation

INSTALLING DISTRIBUTION PIPING (Continued)

Distribution Manifold And Piping (Continued)

3. Continue piping remainder of the distribution piping, following piping sketch and computer design completed in System Design Section. When installing a selector valve in the piping system, make certain of the following:
   - Selector valve is installed with either a manual actuator or a brass cap on the upper actuator threads. See Component Sheet, Page 1-3.2 for Part Nos. of lever actuators and brass cap.
   - Make certain valve is installed in the correct flow direction.

NOTICE

All piping shall be laid out to reduce friction losses to a reasonable minimum and care shall be taken to avoid possible restrictions due to foreign matter or faulty fabrication.

4. Install discharge nozzles as specified on the computer design piping output sheet.
5. Install male end of flexible discharge bend, Part No. 427082, into each manifold inlet. Wrench tighten.
6. With cylinders securely mounted in bracket, attach female end of flexible discharge bend unto cylinder valve outlet. Wrench tighten.
7. If accessory piping is required, see Installing Accessories, Page 6-12, for detailed piping information.

MAIN/RESERVE SYSTEM

When piping a connected reserve system, the reserve cylinders must be segregated from the pressure of the main system. This is accomplished by adding check valves in the distribution manifold. It is also necessary to install a header vent plug on each side of the manifold. This is required because of the addition of the check valves in the manifold. See Figure 9.

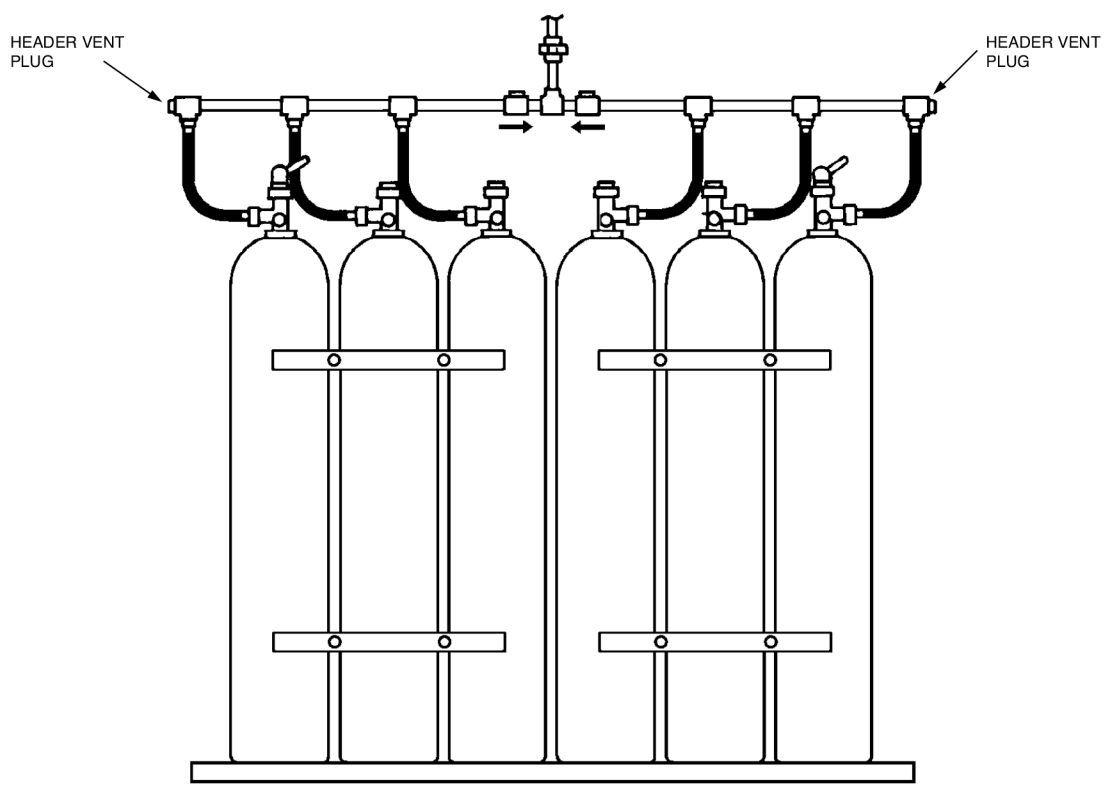

FIGURE 9
002211

Distributed by SIRINA
An authorized ANSUL
Distributor

Installation

INSTALLING DETECTION/ACTUATION SYSTEM

AUTOPULSE With Electric Actuator

The AUTOPULSE Control System is an electronic device incorporating an internal power supply, “on-line” emergency batteries, and solid-state electronics. The system can incorporate either ionization, photoelectric, heat, or flame detectors.

The AUTOPULSE control system offers electric valve actuation by the use of the Ansul electric actuator, Part No. 423684 for CV-98 valve systems.

For detailed installation instructions, refer to the Ansul Detection and Control Applications Manual.

AUTOPULSE With ANSUL AUTOMAN II-C With Pneumatic Actuation

In some cases it is advisable to have electric supervised detection with pneumatic valve actuation. This can be accomplished by incorporating an AUTOPULSE Control System for the detection and an ANSUL AUTOMAN II-C release for the pneumatic actuation.

1. See the appropriate AUTOPULSE Control System manual for detailed installation instructions.
2. Once the electrical portion of the detection system is completed, mount the ANSUL AUTOMAN II-C release in a convenient location to both the AUTOPULSE panel and the INERGEN cylinders.
3. Complete wiring required between the AUTOPULSE control panel and the ANSUL AUTOMAN II-C release. See Figure 10.

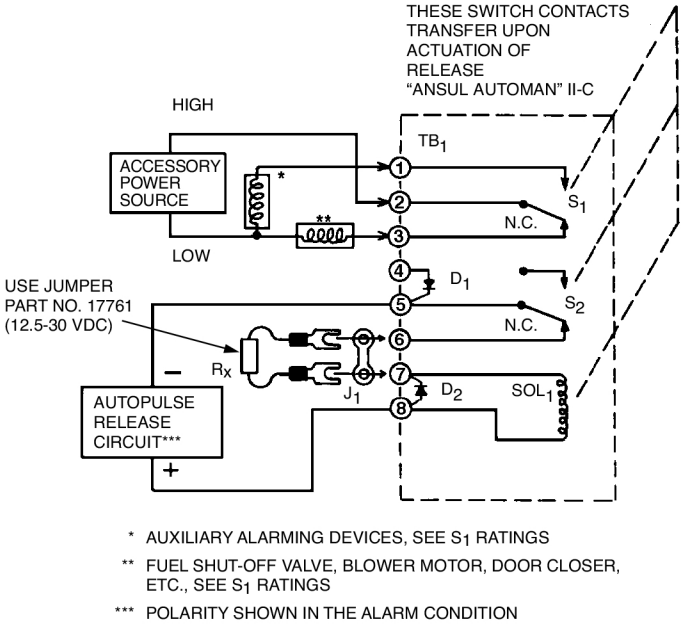

FIGURE 10
001879

4. See Actuation Piping Requirements listed on Page 6-4.

NOTICE

It is only required to actuate one cylinder in the total system. The remainder of the cylinders will be actuated by back-pressure from the actuated cylinder.

See Step. No. 28, “Determine the Pilot Cylinder Requirements,” in Design Section, for additional design information.

⚠ CAUTION

Make certain pneumatic actuator is properly reset before installing on cylinder valve or system will be actuated.

Distributed by SIRINA
An authorized ANSUL
Distributor

Installation

INSTALLING ACTUATOR

NOTE: Refer to "Pilot Cylinder Requirements Chart" in the Appendix Section to determine if additional pilot cylinders are required in the system.

When installing actuators on the INERGEN valve, different styles are available depending on the requirements of the system design.

⚠ CAUTION

Make certain actuator is reset before installing on cylinder valve. Failure to do so will cause system actuation.

Pneumatic Actuation For CV-98 Valve

To install pneumatic actuation, complete the following steps:

1. Remove the 1/8 in. pipe plug from the 1/8 in. actuation port.
2. Attach adaptor (Part No. 873236), male elbow (Part No. 832334), and 1/4 in. high pressure hose (depending on length required, Part No. 31809, 32335 or 32336) to 1/4 in. actuation port. See Figure 11. Securely tighten.

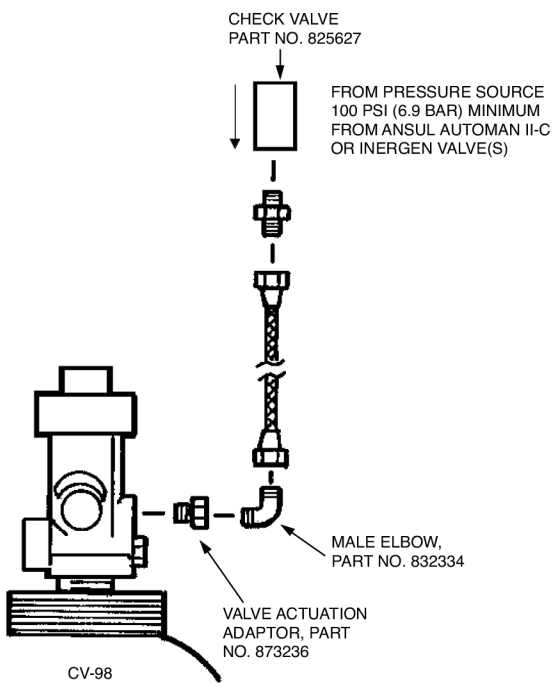

FIGURE 11
003697

3. Connect high pressure actuation piping to outlet port of ANSUL AUTOMAN II-C.

Manual

A lever actuator is available which offers manual actuation at the cylinder and can be connected to a remote manual pull station. Manual actuation is accomplished by pulling the valve hand lever. The lever design contains a forged mechanical detent which secures the lever in the open position when actuated.

⚠ CAUTION

Before mounting the lever actuator(s) on the cylinder valves, make certain the lever actuator is in the "SET" position. If the lever actuator is not in the "SET" position, cylinder will discharge when lever actuator is installed.

See Figure 12 for installation details.

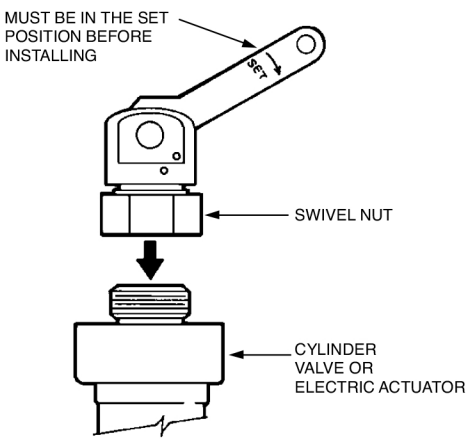

FIGURE 12
001849

Part No. 423309 – Manual cable-pull actuator (chain and pin)

NOTE: Manual actuator for CV-98 valve can be mounted on top of CV-98 electric actuator.

Distributed by SIRINA
An authorized ANSUL
Distributor

Installation

INSTALLING ACTUATORS (Continued)

Electric Actuator – CV-98 Valve

A maximum of two CV-98 electric actuators can be installed on a single AUTOPULSE release circuit.

⚠ CAUTION

Before installing electric actuator to top of CV-98 valve, make certain piston in bottom of actuator is free to move up and down. If piston is in the down position, DO NOT install.

1. Attach actuator to top thread of CV-98 valve. Securely tighten.

⚠ CAUTION

Make certain all electric power from the panel to the actuator has been disconnected. Failure to disconnect power may cause system to accidentally discharge.

2. Connect electric circuit for actuator to Control System. Refer to appropriate AUTOPULSE Manual and CV-98 Electric Actuator Application and Installation Sheet, Part No. 426003 for detailed wiring information.

Installing the Booster Actuator

1. Make certain the booster actuator is in the set (armed) position. This can be confirmed by visually checking the position of the top and bottom pins. When in the set position, the top pin will be approximately flush with the top of the actuator. The bottom pin will be flush with the inside surface of the actuator. If the actuator requires setting, use the arming tooling, Part No. 429847, and follow the instructions listed in "Resetting the Booster Actuator."
2. Hand tighten the actuator unto the cylinder valve or the selector valve.

Installing the HF Actuator

⚠ CAUTION

Make certain all electric power from the panel to the actuator has been disconnected. Failure to disconnect power may cause system to accidentally discharge.

1. Make certain the HF actuator is set (armed) position. When in the set position, the top pin will be flush with the top of the actuator. If the actuator requires setting, use the arming too, Part No. 75433, and follow the instructions listed in "Resetting the HF Actuator".
2. Hand tighten the HF actuator onto the booster actuator.
3. If all other installations are complete, connect electrical power to the HF actuator.

INSTALLING ACCESSORIES

Manual Pull Station

Depending on the type of actuation being used, there are different pull stations available. Remote pull stations can be either mechanical or electric.

MECHANICAL PULL STATION TO ANSUL AUTOMAN II-C RELEASE – To install a mechanical pull station complete the following steps:

1. Insert ring pin in ANSUL AUTOMAN II-C release. See Figure 13.

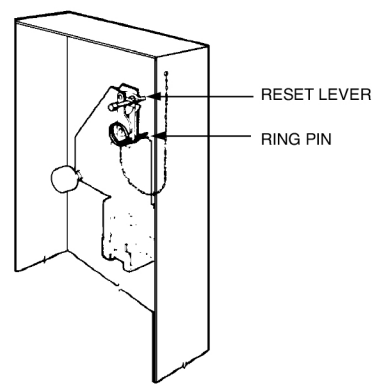

FIGURE 13
001894

2. If necessary, remove cartridge and install safety shipping cap on cartridge.
3. Select a convenient location in the path of exit for mounting the pull station(s) to the wall. Height and location of pull station should be determined in accordance with authority having jurisdiction.

   The total length of the wire rope used for each manual pull station within a system must not exceed 125 ft. (38 m).

   The maximum number of pulley elbows that may be used per system is 18 of Part Nos. 423250 and 415670.
4. If junction box(es) is used, fasten a 4 in. (10 cm) junction box to wall or in wall where pull station is to be mounted, with mounting screws positioned so that when pull station cover is positioned in place, the printing will appear right side up and readable.

Distributed by SIRINA
An authorized ANSUL
Distributor

INSTALLING ACCESSORIES (Continued)

Manual Pull Station (Continued)

ALTERNATE METHOD OF CONNECTION:

a. Thread 3/4 x 1/2 in. reducing coupling to bushing on back of each cover assembly.

b. Mount pull station cover(s) directly to wall at selected location so that printing is right side up and readable.

5. Install and secure 1/2 in. conduit, pulley tee (if required), and pulley elbows from each pull station to release assembly as necessary. See Figure 14.

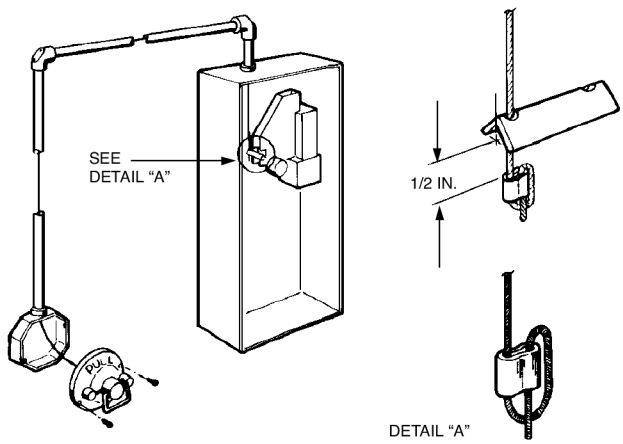

FIGURE 14
002262

If a pulley tee is used, it must be installed between the release assembly and first pulley elbow. The ambient temperature range of the pulley tee is between 32 °F to 130 °F (0 °C to 54 °C).

6. Feed wire rope from each pull station through conduit and each pulley elbow to cable lever located at release assembly.

NOTICE

Make certain that wire rope rides on top and in center of pulley sheave. If the wire rope has been spliced to accommodate a longer run, do not allow the spliced ends to be within 12 in. (30 cm) of any pulley elbow or conduit adaptor.

7. Fasten pull station assembly to each junction box (if junction box is used).

8. Thread wire rope through rear guide hole in manual trip lever on release. See Figure 14.

9. Pull all slack out of wire rope and thread end through sleeve, Part No. 4596.

10. Loop the wire rope back up around and through top of sleeve.

11. Position sleeve approximately 1/2 in. (1.3 cm) and crimp to secure wire rope. (Use the National Telephone Supply Company Nicopress Sleeve tool Stock No. 51-C-887 or equal to properly crimp stop sleeve.) See Figure 14.

MECHANICAL PULL STATION TO LEVER RELEASE – To install a mechanical pull station complete the following steps:

1. Select a convenient location in the path of exit for mounting the pull station(s) to the wall. Height and location of pull station should be determined in accordance with authority having jurisdiction.

   The total length of the wire rope used for each manual pull station within a system must not exceed 125 ft. (38 m).

   The maximum number of pulley elbows that may be used per system is 10.

2. Install and secure 1/2 in. conduit, dual/triple junction box, and pulley elbows from each pull station to release assembly as necessary.

3. Feed wire rope from pull station through conduit and each pulley elbow to cable lever located at release assembly.

NOTICE

Make certain that wire rope rides on top and in center of pulley sheave. If the wire rope has been spliced to accommodate a longer run, do not allow the spliced ends to be within 12 in. (30 cm) of any pulley elbow or conduit adaptor.

4. Fasten pull station assembly to each junction box (if junction box is used).

⚠ CAUTION

Wire or pin the actuator lever in the "SET" position before connecting the cable to the lever. Failure to comply could result in accidental agent discharge.

5. Wire or pin the actuator lever in the "SET" position to prevent accidental discharge when installing the cable. See Figure 15.

6. Feed cable through hole in actuator lever and fasten with cable clamp. See Figure 15.

Distributed by SIRINA
An authorized ANSUL
Distributor

Installation

INSTALLING ACCESSORIES (Continued)

Manual Pull Station (Continued)

7. When installing, make certain there is at least 7 in. (17.8 cm) of free cable between the cable clamp and the flared end fitting for proper operation of lever. See Figure 15.

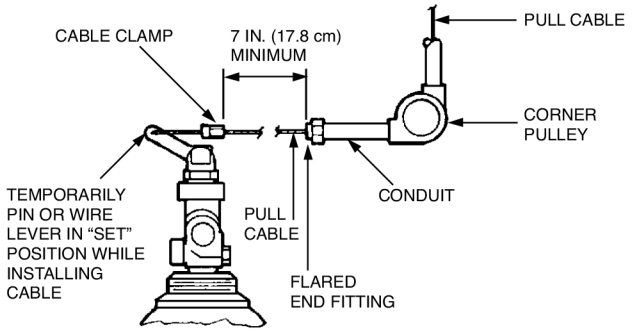

FIGURE 15
002220

8. Remove wire or pin that was used to hold the lever in place during cable installation. **NOTE:** Failure to complete this step will cause system to not actuate when pull station is used.

ELECTRIC PULL STATION TO AUTOPULSE CONTROL PANEL – The electric pull station must be mounted in an area where it will not be exposed to physical abuse or a corrosive environment. The pull station should be mounted no higher than 60 in. (153 cm) from the floor, or what the authority having jurisdiction requires. See ANSUL AUTOPULSE Installation, Operation, and Maintenance Manuals, Part Nos. 74255, 77498, 77513, or 69970 for detailed wiring instructions.

Alarms

Several types of alarms are available for use with the INERGEN system. Some require 24 VDC power and others require 120 VAC. Make certain that the alarm chosen is compatible with the detection system control panel used.

24 VDC ALARMS – All alarms used with the ANSUL AUTOPULSE Control system require 24 VDC power. See the Component Index in the appropriate ANSUL AUTOPULSE installation, operation, and maintenance manual for description of available alarms.

120 VAC ALARMS – This type of alarm bell can only be utilized with an Ansul AUTOMAN II-C release. It can not be used on an ANSUL AUTOPULSE Control system.

To properly install the 120 VAC alarm, complete the following:

NOTICE

All wiring installations must comply with local, state, and federal codes and must be completed by a licensed electrician.

1. Install the alarm by first selecting a mounting location and installing a 4 in. octagon or 4 in. square junction box.
2. Run 1/2 in. conduit from the releasing device to the junction box.
3. Feed lead-in wires from release and power supply junction box.
4. Refer to appropriate wiring diagrams and connect wires in release junction box.
5. Disassemble alarm by removing bolt from face of bell housing.
6. Connect lead-in wires to leads from rear of alarm plunger mechanism.
7. Secure alarm plunger mechanism mounting plate to junction box.
8. Reassemble housing to alarm mechanism.

Pressure Trip

Pressure trips are used to actuate spring loaded or weighted mechanisms generally used to close doors or windows. The pressure trip should be securely mounted in the appropriate location and piped with 1/4 in. actuation piping back to the release device.

Pressure trips can be piped off the INERGEN SYSTEM discharge piping, down stream from the orifice union, which is the preferred method, or if the system is utilizing an ANSUL AUTOMAN II-C, the pressure trip can be piped off the actuation line. See Figure 16.

INSTALLING ACCESSORIES (Continued)

Pressure Trip (Continued)

Pressure trips can be piped in series and the last pressure trip must contain a 1/4 in. plug in the outlet port. See Figure 16. Maximum of two pressure trips in a single actuation line. Operating pressure must be a minimum of 75 psi (517 kPa) with a maximum load of 70 lbs. (31.8 kg). Maximum total length of all 1/4 in. piping must not exceed 100 ft. (30.5 m).

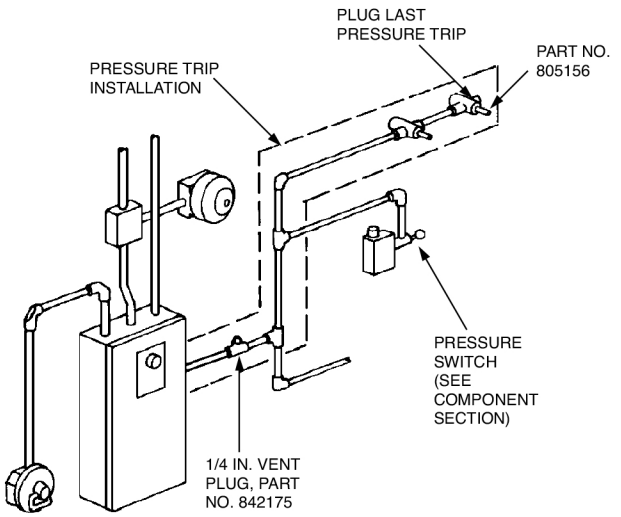

FIGURE 16
001903

Pressure Switch

Pressure switches are used to pneumatically operate electrical circuits which, in turn, will operate alarms, lights, or turn on or turn off equipment.

Pressure switches can be piped off the INERGEN system discharge piping, down stream from the orifice union, which is the preferred method, (or piped off the system manifold), or if the system is utilizing an ANSUL AUTOMAN II-C, the pressure switch can be piped off the actuation line. See Figure 17.

1. Mount pressure switch(es) in desired location(s) with appropriate fasteners.
2. Install piping from main actuation line, or from the INERGEN system distribution piping, to pressure switch fitting. Piping to be 1/4 in. Schedule 40, black or galvanized steel pipe, and must not exceed 100 ft. (30.5 m).

Wire each pressure switch to other compatible components in accordance with manufacturer's instructions. A QUALIFIED ELECTRICIAN should connect all electrical components in accordance with the authority having jurisdiction.

Distributed by SIRINA
An authorized ANSUL
Distributor

Testing And Placing In Service

To test a remote electric pull station, refer to appropriate AUTOPULSE® Control System installation, operation, and maintenance manual.

To test a remote cable pull station to ANSUL AUTOMAN® II-C release, complete the following steps:

⚠ CAUTION

When testing pull station, make certain cartridge is not installed in ANSUL AUTOMAN II-C release. Failure to remove cartridge will cause system actuation. Make certain shipping cap is installed on cartridge.

1. With the gas cartridge removed, remove ring pin from release puncture pin assembly.
2. If required, remove glass break rod from pull station by removing set screw on side of stud and slide glass break rod out.
3. Pull handle on pull station. If the release assembly is tripped easily, the remote cable pull station is properly installed.

   If the release assembly does not trip easily, remove pulley tee (if provided) and each pulley elbow cover to make certain wire rope is resting on the pulley sheave. If this does not correct the problem, there is too much slack in the cable and it must be retightened.
4. If retightening or realignment was necessary, retry pull station. If release assembly operates properly, cut off any excess wire rope 3/4 in. (2 cm) above oval sleeve.
5. Recock release assembly using cocking lever, Part No. 26310, and reinstall ring pin.
6. Slide glass break rod through stud and ring handle. Tighten set screw into stud.
7. If no other testing is required, re-install nitrogen cartridge in ANSUL AUTOMAN II-C Release.

To test a remote cable pull station to cylinder lever release(s), complete the following steps:

⚠ CAUTION

Make certain lever actuator(s) are removed from cylinder valves prior to testing pull station. Failure to do so will cause cylinder discharge.

1. Remove lever actuator(s) from cylinder valve.

   NOTICE

   After removing actuator(s) from cylinder valve, securely support actuator(s) in order for it to operate when pull station is pulled.
2. Pull remote cable pull station. Lever actuator should move to the tripped position.

   If lever actuator does not trip, remove each pulley elbow cover to make certain wire rope is resting on the pulley sheave. If this does not correct the problem, there is too much slack in the cable and it must be retightened.
3. If retightening or realignment was necessary, retry pull station.
4. If pull station operated properly, reset lever actuator.

⚠ CAUTION

Make certain lever actuator is in the “SET” position before reinstalling on cylinder valve. Failure to do so will cause actuation when reinstalling.

5. Reinstall lever actuator on cylinder valve. Wrench tighten.

Distributed by SIRINA
An authorized ANSUL
Distributor

Distributed by SIRINA
An authorized ANSUL
Distributor

Testing And Placing In Service

TESTING CV-98 ELECTRIC DETECTION/ACTUATION SYSTEM – AUTOPULSE CONTROL SYSTEM

⚠ CAUTION

Electric Actuator, Part No. 423684, must not be installed on INERGEN® cylinder valve during test. If installed, testing of the electric detection system will cause actuation and discharge of the fire suppression system.

In order to properly test the electric detection and actuation system, refer to the appropriate AUTOPULSE control system installation, operation, and maintenance manual and the CV-98 Electric Actuation Application and Installation Sheet, Part No. 426003.

When CV-98 electric actuator is actuated correctly, the piston in the bottom of the actuator will be locked in the down position. It will be locked in that position by the internal discharged METRON PROTRACTOR. The METRON PROTRACTOR **must be replaced** before re-installing actuator to valve. See Recharge Section for replacement instructions.

TESTING ELECTRIC DETECTION SYSTEM – ANSUL AUTOMAN II-C RELEASE

When utilizing an ANSUL AUTOMAN II-C release for electric detection or in combination with an AUTOPULSE Control System, refer to ANSUL AUTOMAN II-C Releasing Device Installation, Operation, and Maintenance Manual, Part No. 17788, or for explosion-proof version, Part No. 31496, for detailed information.

TESTING SELECTOR VALVE

When utilizing selector valves in the distribution piping network, make certain all selector valve internal actuators are in the “SET” position. To do this, pull the knurled reset knob on the side of the valve. This will cause the internal actuator to reset to the proper operating position. The knob will lock in the “OUT” position.

DISCHARGE TEST

The authority having jurisdiction may require an INERGEN system discharge test. In preparing for a discharge test, the following guidelines may help:

1. Perform a complete maintenance exam prior to performing the discharge test. This will confirm that the system will function properly.
2. Inform all personnel that a discharge test will be conducted. Everyone should be aware that various equipment will shut off or turn on. No one should be in the hazard area during the discharge.
3. If necessary, perform an enclosure integrity (door fan) test prior to running the INERGEN system discharge test. This will confirm that total venting area is not too great for the hazard to adequately contain the desired INERGEN agent concentration.
4. Set up the recording equipment outside of hazard area. Ansul recommends using the following equipment:
   - Nova Model 308 BWP portable oxygen and carbon dioxide analyzer
   - M-Tek Model 312 two pen, four in., multi-range, multi-speed chart recorder

   Ansul recommends that the oxygen and carbon dioxide concentrations be monitored from a single point within the protected space. The source for the monitoring point will be the hazard most likely considered the fire source. In the case of total room protection with multiple hazards, the monitoring point should be halfway up at the center of the room.
5. **NOTE:** If the system is to be fired manually, disconnect the electric actuator to prevent firing from a pressure switch and control panel. Actuate INERGEN system and monitor recording equipment.

   In order to meet the design concentration, the Oxygen and CO_2 levels must meet the values in Table 1. The oxygen concentration must not exceed 15% throughout the hold time determined by the AHJ.

INERGEN %	Oxygen % (Equal to or Less Than)	CO_2 % (Equal to or Greater Than)
34.2	13.8	2.7

TABLE 1

   Reading should start one minute plus meter delay time from system actuation. Meter delay time, depending on length of tubing, could be as long as 30 to 60 seconds.
6. After concentration monitoring is complete, open doors and, if possible, windows, to completely air out hazard area.
7. Reset control panel and all auxiliary equipment. Make certain all equipment has returned to its normal operating status.

Testing And Placing In Service

DISCHARGE TEST (Continued)

8. Remove all empty INERGEN agent cylinders and install full ones. Attach all actuators. **NOTE:** CV-98 electric actuators require replacing the METRON PROTRACTOR after discharge. See Section VIII, Resetting and Recharge.
9. Remove all empty INERGEN agent cylinders from the area. Deliver the empty cylinders to an authorized INERGEN Agent Fill Location.

NOTICE

In order to maintain Factory Mutual Research Corporation Approval, only factory filled cylinders are to be used.

10. Record discharge test information with the authority having jurisdiction and inform all concerned personnel that the system is now back in normal working order.

Distributed by SIRINA
An authorized ANSUL
Distributor

Resetting And Recharge

CLEAR ELECTRICAL EQUIPMENT

Refer to AUTOPULSE® installation, operation, and maintenance manuals for detailed instructions on resetting the electric detection system.

NOTICE

If AUTOPULSE Control System is utilizing an ANSUL AUTOMAN® II-C releasing device for pneumatic actuation, AUTOPULSE panel will remain in trouble condition until ANSUL AUTOMAN II-C release is recocked.

If utilizing an ANSUL AUTOMAN II-C release with thermal detectors, detectors must be cooled down, below their set point, before release can be reset.

Refer to ANSUL AUTOMAN II-C Installation, Operation, and Maintenance Manuals, Part No. 17788 and 31496, for detailed instructions.

CHECK ELECTRICAL AND MECHANICAL EQUIPMENT

Piping and Nozzles

A fire condition could cause damage to the piping and nozzles and possibly support members. Check all rigid pipe supports and all fitting connections. Take the nozzles off the piping, inspect for damage, corrosion, or obstructions, clean and re-install.

Selector Valve

Reset the selector valves by completing the following steps:

1. Pull knurled reset knob on selector valve actuator. Make certain knob locks in the out position.
2. If necessary, reset lever actuator on top of selector valve. If required, replace pin and reseal with lead wire seal, Part No. 197.

Electric Detection System

ANSUL AUTOMAN II-C RELEASING DEVICE – For complete resetting instructions, refer to Installation, Operation, and Maintenance Manuals, Part No. 17788 and 31496.

AUTOPULSE CONTROL SYSTEM – For complete resetting instructions, refer to the appropriate installation, operation, and maintenance manual.

Pressure Switch

Reset the pressure switch by completing the following steps:

1. Make certain all pressure in the line to the switch has been properly relieved.
2. Push in red knob on end of pressure switch plunger.
3. Make certain electrical function has been correctly reset.

Resetting the HF Actuator

The HF actuator must be reset after each use. An arming tool, Part No. 75433, is required. To rearm, complete the following steps:

1. Remove electrical power to the HF actuator.
2. Remove the actuator from the CV-98 valve or the selector valve.
3. Using the arming tool, Part No. 75433, push up on the actuator pin located at the bottom of the actuator. The actuator pin will be locked in the armed position when a "snap" is heard.
4. Do not reinstall actuator until booster actuator is reset.

Resetting the Booster Actuator

The booster actuator must be reset after each use. A reset tool, Part No. 429847, is required. To reset, complete the following steps:

1. Remove the booster actuator from the CV-98 valve or the selector valve.
2. Make certain the internal threaded plug in the reset tool, Part No. 429847, is backed out approximately half way.
3. Hand tighten the reset tool into the bottom of the booster actuator.
4. Turn the internal threaded plug of the reset tool clockwise (into the booster actuator) until a "snap" is heard.
5. Back out the internal threaded plug one to two turns.
6. Unscrew the reset tool from the booster actuator.
7. Check to confirm that it is reset properly: the top pin of the booster actuator will be approximately flush with the top of the actuator. The bottom pin will be flush with the inside surface of the actuator.

Once both the HF actuator and the booster actuator are reset, reinstall both and restore electrical power to the system if all other recharge steps have been completed.

Distributed by SIRINA
An authorized ANSUL
Distributor

Resetting And Recharge

PLACE SYSTEM BACK IN SERVICE – CV-98 VALVE

Recharge procedures for cylinder assemblies utilizing the CV-98 valve with an electric actuator requires normal cylinder recharging along with replacing the discharged metron protractor located within the electric actuator.

RECHARGE CYLINDER

The following steps must be followed when removing discharged cylinders from the system:

1. Disconnect the flex bend from the cylinder(s) outlet.
2. Remove all actuators from the cylinder valves.
3. If necessary, remove 1/4 in. actuation hose, elbow, and adaptor from pneumatic actuation port.
4. If necessary, install plug, Part No. 42411, into pneumatic actuation port and wrench tighten.
5. With cylinder secured in bracket, relieve any remaining pressure in the cylinder by completing the following:
   a. Make certain discharge cap IS NOT on valve outlet. See Figure 1.

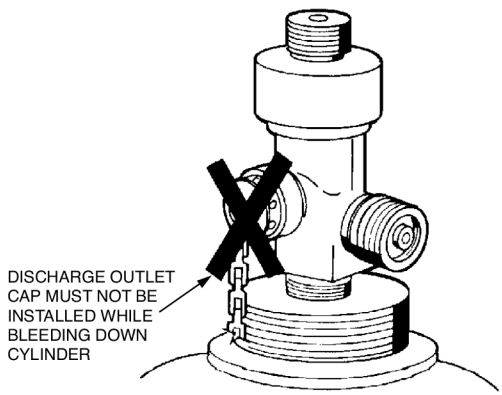

FIGURE 1
001515

⚠ CAUTION

Attach bleed down device, Part No. 426028, to fill inlet of discharged cylinders only. Never attach this device to fully charged cylinders as this will cause high pressure to discharge out of the fill inlet. Also, install device hand tight only. Do not wrench tighten. NOTE: Bleed-down device, Part No. 416656, CANNOT be used on CV-98 valve.

   b. Attach bleed down device, Part No. 426028, to valve fill inlet. See Figure 2.

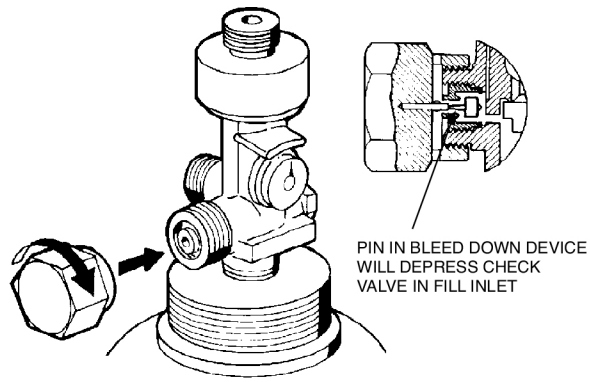

FIGURE 2
001853

   c. Bleed residue pressure from cylinder. Make certain cylinder is completely empty before removing bleed down device.
   d. With cylinder completely empty, remove bleed down device and install safety shipping cap.
   e. Complete Steps a. through d. on all discharged cylinders, both pilot and slave.
6. Determine if discharged cylinder requires hydro-testing prior to being recharged. Note last hydro date on cylinder collar. If cylinder does not have a star stamp (350/425/435 cu. ft. INERGEN® cylinders), it requires hydro 5 years from last hydro date. If cylinder has a star stamp (200/250 cu. ft. INERGEN cylinder), it requires a hydro-test 10 years from last date.

NOTICE

Empty cylinders must be sent to an authorized Ansul recharge facility for filling. Contact Ansul Technical Services Department for any information needed concerning authorized fillers. In order to maintain Factory Mutual Research Corporation approval, factory filled INERGEN cylinders must be used.

Distributed by SIRINA
An authorized ANSUL
Distributor

REPLACE METRON PROTRACTOR IN ELECTRIC ACTUATOR

To replace the METRON PROTRACTOR in the electric actuator, complete the following steps:

1. Determine if actuator has been operated.
2. Remove power from electric actuator circuit.
3. Remove CV-98 manual actuator if attached to CV-98 electric actuator.
4. Remove electric actuator from cylinder valve.
5. Unscrew actuator cap. See Figure 3.

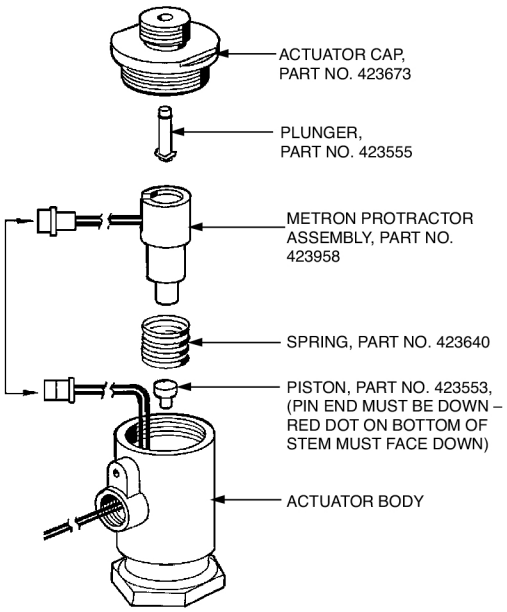

FIGURE 3
001854

6. Lift actuated METRON PROTRACTOR assembly housing out of actuator body and disconnect wire plug. See Figure 3.
7. Discard used METRON PROTRACTOR assembly. A discharged METRON PROTRACTOR will have the stainless steel pin extending approximately 1/8 – 3/16 in. out of the bottom. On a new METRON PROTRACTOR, the pin will not be visible. See Figure 4.

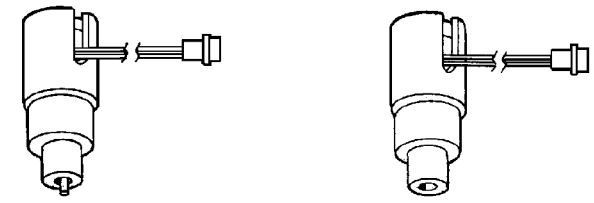

FIGURE 4
001855

8. Before positioning new METRON PROTRACTOR housing assembly, Part No. 423958, into electric actuator body, remove the piston. Thoroughly clean piston and inside bottom surface of actuator body of any dirt or foreign material. As the pin is emitted from a METRON PROTRACTOR when it operates, a small metal disc is ejected. This metal disc may be found resting on the piston inside the actuator body. Before replacing the actuated METRON PROTRACTOR assembly with a new one, make certain this metal disc is removed from the piston area. Replace piston back into body. When replacing piston, make certain pin end is facing down. See Figure 3.
9. Position METRON PROTRACTOR housing assembly back into electric actuator body, making certain METRON PROTRACTOR housing assembly and spring are properly seated in bottom of actuator body. See Figure 3.

⚠ CAUTION

Before completing Step No. 10, make certain the control panel is reset and the release circuit is not in an actuated mode.

10. Plug wire connector together. See Figure 3.

Distributed by SIRINA
An authorized ANSUL
Distributor

Resetting And Recharge

REPLACE METRON PROTRACTOR IN ELECTRIC ACTUATOR (Continued)

11. Carefully tuck wire connector at an approximately 45° angle down along the inside of METRON PROTRACTOR housing assembly between the spring and the inside of the actuator body. **NOTE: Make certain wires are not located over top of housing.**
12. Make certain plunger moves freely up and down. See Figure 3.
13. Screw cap back on actuator body. Securely tighten.
14. Make certain piston on bottom of actuator is free to move up and down. See Figure 4. **NOTE:** If pin is not visible in bottom hole of actuator, the piston has been re-installed incorrectly. Red dot on bottom of piston stem must be visible from bottom of actuator. Disassemble and correct.

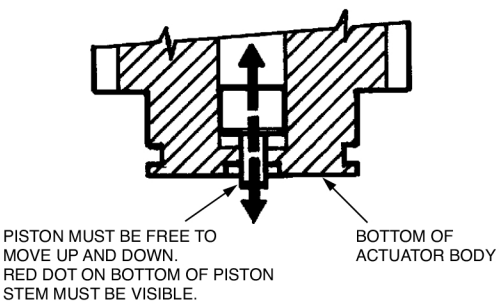

FIGURE 4
001857

After the cylinder(s) has been secured back in the bracket and discharge hose(s) have been reconnected (if necessary, reconnect 1/4 in. actuator hose to ball check port) and wrench tightened, attach the actuator(s) by completing the following:

⚠ CAUTION

Make certain all electric power from the panel to the actuator has been disconnected. Failure to disconnect power may cause system to accidentally discharge.

1. Make certain actuator has been recharged with a new METRON PROTRACTOR assembly.

⚠ CAUTION

Before installing electric actuator to top of CV-98 valve, make certain piston in bottom of actuator is free to move up and down. Refer to Figure 4.

2. Attach actuator to top thread of CV-98 valve. Securely tighten.

MANUAL VALVE ACTUATOR

Before installing manual actuator back unto cylinder valve, make certain manual actuator is in the “SET” position. On manual actuator with ring pins, make certain ring pin is in position and secured with a visual inspection seal.

If the CV-98 manual actuator was used, apply a small amount of lubricant, such as WD-40, to the pin between the handle and the body.

RESETTING SELECTOR VALVE

The selector valve and CV-98 electric actuator must be reset to put the system back into operation.

To reset the CV-98 electric actuator, remove the actuator from the selector valve. Follow the METRON PROTRACTOR replacement instructions.

The selector valve must be returned to the “SET” position after recharge. To do this, pull the knurled reset knob on the side of the valve. This will cause the internal valve actuator to reset to the proper operating position. The knob will lock in the “out” position.

Reinstall CV-98 electric actuator to top thread of selector valve.

MANUAL PULL STATION

Reset remote manual pull station by completing the following steps:

1. If necessary, remove set screw that is retaining the break glass rod.
2. If necessary, carefully remove any remaining broken glass from station.
3. Press and position handle in proper location against cover and slide the replacement glass break rod, Part No. 4834, through stud and handle.
4. Tighten set screw into stud.

Resetting And Recharge

Distributed by SIRINA
An authorized ANSUL
Distributor

REPLACE ANSUL AUTOMAN II-C CARTRIDGE

Install new LT-30-R nitrogen cartridge by completing the following steps:

1. Remove shipping cap and weigh replacement cartridge. Replace if weight is 1/2 ounce (14.2 g), or more, below weight stamped on cartridge.
2. Make certain release mechanism is cocked and lock pin is installed. Then, install replacement cartridge into release assembly and hand tighten.
3. Remove lock pin.
4. Secure cover on ANSUL AUTOMAN II-C release and seal with visual inspection seal.
5. Record recharge date on tag attached to unit and/or in a permanent file.

NOTIFY OWNER

1. Notify owner and/or authority having jurisdiction that the system has been recharged and placed back in service.

Distributed by SIRINA
An authorized ANSUL
Distributor

Resetting And Recharge

PRESSURE TEMPERATURE CHART

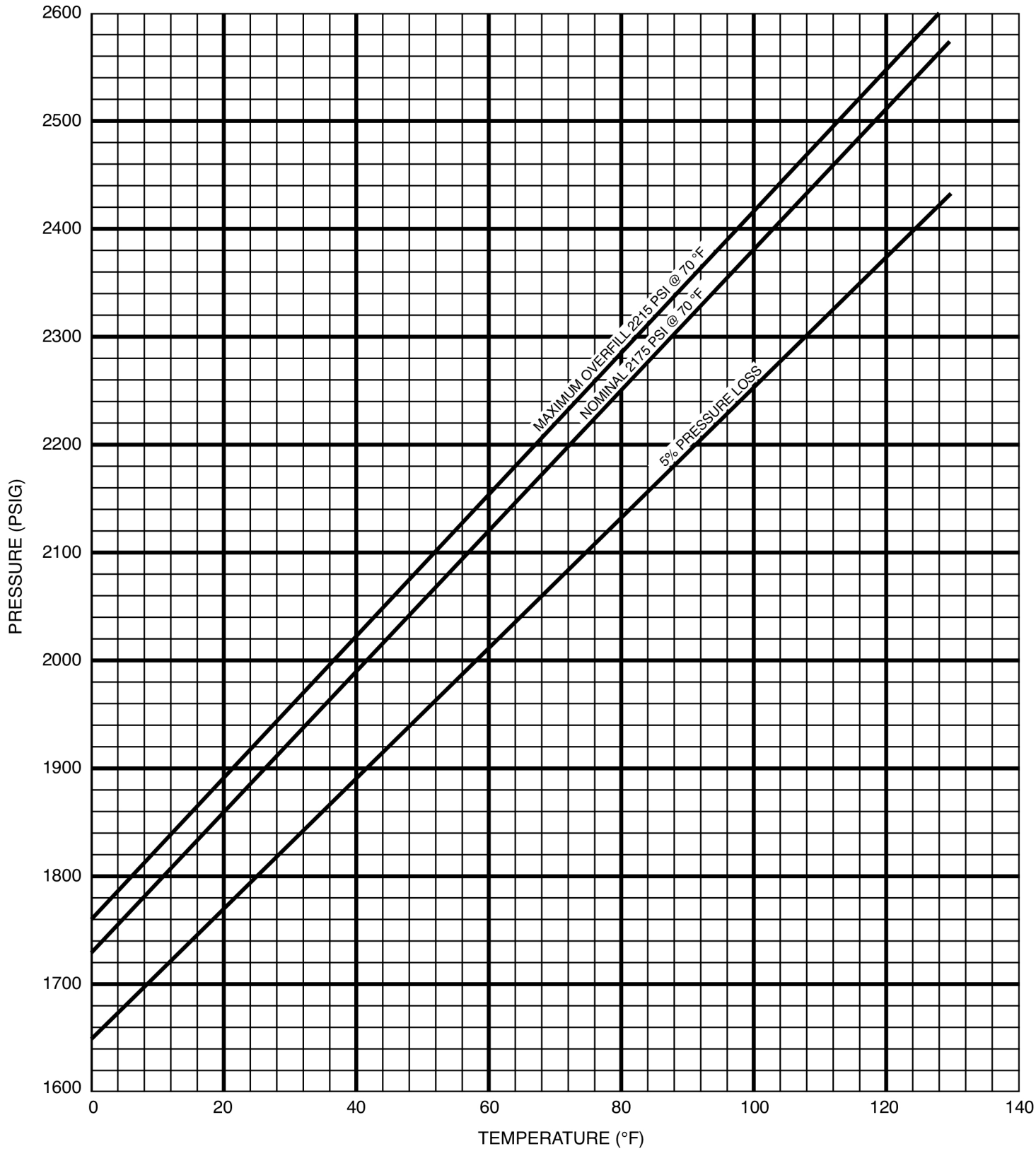

Inspection

Inspection is a “quick check” that a system is operable. It is intended to give reasonable assurance that the system is fully charged and will operate. This is done by seeing that the system has not been tampered with and there is no obvious physical damage, or condition, to prevent operation. The value of an inspection lies in the frequency, and thoroughness, with which it is conducted. Systems should be inspected at regular monthly intervals, or at more frequent intervals when circumstances require.

The following visual checks should be performed during an INERGEN® system inspection:

- Visually inspect the hazard area to verify that it has not changed. Look for different fuels, new equipment, blocked open doors or dampers.
- Check detectors to make certain they are in place, not damaged or coated with dirt, grease, paint, or any contaminating substance.
- Check all manual pull stations to assure they have not been tampered with and are not blocked from use.
- Check all alarm devices for damage, dirt, corrosion, etc.
- Check that the piping is secure and nozzles are in place. Make certain the nozzles are not covered with dirt, grease, or paint and that there is nothing structural blocking the discharge.
- Visually inspect all components for signs of damage, such as disconnected or loose parts, corrosion, twisted or dented components, etc.
- Check each INERGEN cylinder indicator (gauge) to determine that the cylinder pressure is in the operable range.
- Verify that all pressure switches are in place and are in the correct, nonoperated, position.
- Visually verify that control panel and/or releasing device is functioning properly.
- Perform any other checks that may be required by the authority having jurisdiction.
- Verify that the pressure reducer/union contains an orifice plate by visually noting the presence of the orifice indicator tab on the side of the union.
- Pull knurled reset knob on selector valves to make certain it is in the “SET” out position.
- If applicable, push green poppet valve near solenoid on selector valve to relieve any pressure.
- Visually check solenoid or electric actuator wiring on selector valve to make certain it has not been disconnected.
- Make certain lever actuator on selector valve is in “SET” position.
- Record that the system has been inspected and inform the proper personnel.

Distributed by SIRINA
An authorized ANSUL
Distributor

ANNUAL MAINTENANCE EXAMINATION

General

Systems shall be maintained at regular intervals, not more than one year apart, or when specifically indicated by an inspection. **(Exception: Cylinder pressure must be checked every six months per NFPA 2001.)** Maintenance is a "thorough check" of the system. It is intended to give maximum assurance that a system will operate effectively and safely. It includes a thorough examination and any necessary repair, recharge, or replacement. It will reveal if there is a need for hydrostatic testing of the cylinder. The procedures listed in this section are the minimum that is necessary to maintain a system. If circumstances warrant them, a more thorough procedure should be followed to assure system performance. Make certain that all people affected by the maintenance are informed before you start. This may include the owner, security personnel, the local Fire Department, and possibly local workers that may be affected by equipment shutdown or start up.

NOTICE

If the system includes an ANSUL AUTOMAN® II-C releasing device, before proceeding with annual maintenance examination, insert lock pin in ANSUL AUTOMAN II-C release and remove nitrogen cartridge. Install safety shipping cap on cartridge.

1. Survey the hazard to make certain it has not changed from what the system was designed to protect. While surveying the hazard, look for different fuels, loss of hazard integrity, new hazards, etc.
2. Check all nozzles to make certain they are in place, that the orifice plates are in place and with the proper orifice. Check the condition of the nozzle for corrosion or damage and make certain it is not obstructed internally or externally.
3. Check the condition of the piping to make certain that it is properly secured in the hangers and that all fittings are connected tightly.
4. Check all warning nameplates throughout the area. Make certain they are in place, mounted securely, readable, and are not damaged.
5. Check all cylinder bracketing. Make certain all cylinders are secured in the brackets. Check for corrosion, damage, or missing components.
6. Check the condition of all cylinders. Look for signs of damage or corrosion, and check the cylinders last hydrotest date. (NFPA 2001 states "Cylinders continuously in service without discharging shall be given a complete external visual inspection every five years or more frequently if required. The visual inspection shall be in accordance with Compressed Gas Association Pamphlet C-6, Section 3; except that the cylinders need not be emptied or stamped while under pressure.")

   Using the Pressure Test Gauge Assembly (Part No. 423923 for CV-98 valves), check each cylinder to determine if pressure is within the acceptable range. See Pressure Correction Chart in the Appendix Section.

   To use the pressure test gauge assembly, first make certain cylinder is properly bracketed. Before attaching assembly, make certain stem is completely backed out by turning hand wheel counterclockwise until it stops. Attach the assembly to the fill inlet port of the INERGEN cylinder valve. Wrench tighten. To read the cylinder pressure, turn handwheel completely clockwise until it stops, then back it off 1/4 turn. This will open the fill port. After pressure has been read, close fill port by turning handwheel completely counterclockwise. Slowly loosen the adaptor nut to remove the pressure test gauge assembly from the fill port. While removing this, you may hear a small hiss of pressure remaining in the assembly. This is normal and will not last long. You will also notice the gauge pressure will drop to zero.

   Record the cylinder pressure for reference on the next pressure test.

   Visually note the location of the indicator needle on the cylinder valve to determine if it is in close proximity to the actual reading of the test gauge.
7. Check condition of all cylinder discharge hoses. Look for signs of structural problems like abrasions or weather checking. Make certain all hoses are connected properly. All hoses must be tested every 5 years. Refer to NFPA 2001 for detailed testing requirements.

Distributed by SIRINA
An authorized ANSUL
Distributor

Maintenance

ANNUAL MAINTENANCE EXAMINATION (Continued)

General (Continued)

8. Check condition of all actuators by completing the following:
   a. Remove all actuators from the cylinders and leave them off until the final step in the Maintenance Section.
   b. For manual actuators, check the condition of each actuator to make certain they operate freely. When finished, reset them and seal with inspection seals as required. **Do not** install on cylinder valves.
   c. For electric actuators, check to make certain all wires are properly connected. **Do not** install on cylinder valves.
9. Check the condition of the orifice union and make certain correct size orifice plate is in place. Orifice size can be read on exposed tab.
10. Check all pressure switches for signs of damage or corrosion. Make certain piping to switch is properly attached.
11. Check all switches on the system to assure they will operate properly. These may include maintenance switches, abort switches, main/reserve switches, etc. When completed, make certain they are all set in the correct position.

NOTICE

Before proceeding with Step No. 12, make certain all electrical actuators have been removed from all cylinder valves and that the cartridge has been removed from the ANSUL AUTOMAN II-C releasing device(s) if part of the system.

12. Check condition of control panel for tampering, corrosion, or damage. Test panel at this point by referring to the appropriate AUTOPULSE Control System Manual.
13. Check all detectors. Make certain they are in place, clean, and not damaged. If required, check the sensitivity of each per the instructions of the detector manufacturer. See appropriate AUTOPULSE® Control System Manual for detailed operating instructions of the panel.
14. Check all pull stations. Make certain they are in place, that they are not blocked or damaged. Operate each pull station to make certain that they operate the control panel. Reset each pull station and seal with visual inspection seal.
15. While checking the detectors and electric pull stations, inspect each alarm device. Check the alarms condition and verify that it operates properly when energized. Reset the alarm circuit after each test.
16. If the system includes an ANSUL AUTOMAN II-C releasing device, test it per the instructions titled Thermal Detection/Electric ANSUL AUTOMAN II-C Release listed in this section. If system contains a cable pull station, check it for correct operation at this time. Reset and reseal after operating.
17. Reset the entire system. This includes the control panel, all actuators, detectors, alarms, actuator cartridge, release cartridge, and pressure switches. After all components have been reset, install actuators back on to the cylinder valves.
18. Record that the maintenance has been performed as required by the Authority Having Jurisdiction. Notify all personnel that the maintenance has been completed and the system is back to normal.

Distributed by SIRINA
An authorized ANSUL
Distributor

Maintenance

ANNUAL MAINTENANCE EXAMINATION (Continued)

Thermal Detection/Electric ANSUL AUTOMAN II-C Release

1. Make certain ring pin is in place in ANSUL AUTOMAN II-C release mechanism. See Figure 1.

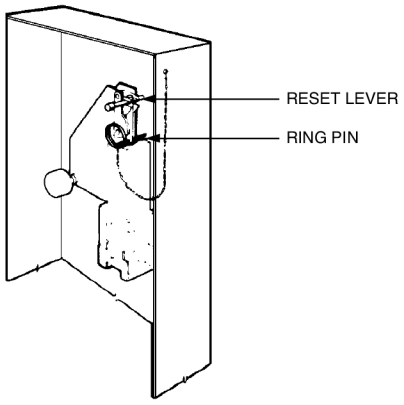

FIGURE 1
001894

2. Remove cartridge.
3. Remove ring pin and manually test system by operating the remote manual pull station or push “STRIKE” button on ANSUL AUTOMAN II-C release.
4. After operating manually, check that all functions have been accomplished.
5. Cock ANSUL AUTOMAN II-C release mechanism using cocking lever, Part No. 26310, and install ring pin.
6. Remove gasket from cartridge receiver in ANSUL AUTOMAN II-C release mechanism. Check gasket for elasticity or cuts and replace if necessary. Clean and coat gasket lightly with a good grade of extreme temperature grease such as Dow Corning No. 4. Reinstall gasket into cartridge receiver. **Do not install cartridge at this time.**
7. Make certain the release mechanism is cocked and ring pin is removed.
8. Test each thermal detector by using an approved heat lamp. Test each detector individually and recock release mechanism after each test.

NOTICE

If system does not fire, check the integrity of the solenoid by using an ohmmeter and measure the resistance of the solenoid coil. If it is not within the resistance range, replace solenoid. There are two different solenoids used in the ANSUL AUTOMAN II-C release and their resistance is as follows:

Number Stamped on Solenoid	Resistance Measurement
P4-2025	12-18 ohms
TBX16-C-12 VDC	21-32 ohms

9. With release mechanism cocked, install ring pin. See Figure 1.
10. Before installing cartridge, reset all additional equipment by referring to appropriate section of Resetting and Recharge, Section VIII.
11. Remove shipping cap and weigh each nitrogen cartridge. Replace if weight is 1/2 ounce (14.2 g), or more, below weight stamped on cartridge.
12. Make certain release mechanism is cocked and ring pin is installed, screw replacement cartridge into release mechanism and hand tighten.
13. Remove ring pin.
14. Install cover on enclosure, install ring pin through “STRIKE” button, and secure with visual seal, Part No. 197.
15. Record annual maintenance date on tag attached to unit and/or in a permanent file.

Electric Detection/AUTOPULSE Control System

⚠ CAUTION

Remove the electric valve actuator from the cylinder valve prior to testing the AUTOPULSE Control System. Failure to do so will cause accidental system discharge.

On selector valve systems, it is not necessary to remove the actuator on the selector valve during this test.

Distributed by SIRINA
An authorized ANSUL
Distributor

Maintenance

Electric Detection/AUTOPULSE Control System (Continued)

Perform system annual maintenance by following the instructions listed in the appropriate AUTOPULSE Control System Installation, Operation, and Maintenance Manual.

- To test the operation of the valve actuator, apply power to the circuit the actuator is installed on. When power is applied, a “click” will be heard in the solenoid. This will confirm the actuator is functioning.
- Also, check the actuator on the selector valve. The “click” should also be heard, confirming the actuator is operating.

When all tests have been completed, make certain all control panels are returned to the normal condition and the valve actuator(s) have been correctly reinstalled back on the cylinder valve.

Example – Computer Room and Subfloor

Electronic data processing involves storage, recall and use of information via electronic equipment. Electronic data processing equipment is found in almost every industry today. The equipment is very sensitive and operates within minute tolerances. Additionally, many computer installations are designed with a subfloor area containing data and power cable bundles.

Because of the high dollar valve of the equipment, the data managed by that equipment and the productivity provided by electronic data processing, rapid detection and efficient fire protection are imperative. Time lost to cleanup and ventilation of a computer room means lost time throughout the company; so these areas require a clean, no residue gas agent that disperses easily.

The computer room and subfloor space can be protected with an INERGEN® suppression system, even when the computer room is normally occupied.

Fires can occur within the computer electrical insulation and in the cable bundles in the subfloor. Paper debris that has been allowed to accumulate in the subfloor is also a source for ignition.

Computer room/subfloor protection can be accomplished by installation of a total flood INERGEN system. The INERGEN system is designed in accordance with the Ansul design, installation manual and NFPA Standard 2001, “Standard for Clean Agent Fire Extinguishing Systems,” which states, “the design concentration must be achieved within 1 minute. It is important that an effective agent concentration not only be achieved, but shall be maintained for a sufficient period of time to allow effective emergency action by trained personnel.”

The INERGEN system consists of a cylinder bank, a piping arrangement and discharge nozzles located in the room and subfloor space.

Occasionally, drainage is installed in the subfloor area. Provisions must be made for making the drain piping a closed system unless water is present to assist in assuring the necessary concentration.

When the computer room is normally occupied, personnel safety is of first concern. Alarms or warning devices must be located in the room to provide sufficient annunciation of INERGEN agent discharge. The room and subfloor must be tight to prevent loss of INERGEN agent.

All air handling equipment must be shut down and dampered prior to system discharge.

Smoke detectors, operated by an electronic control panel, are usually employed with an INERGEN system to provide detection and thus suppression of a fire before it has a chance to do serious damage.

Thermal detectors are used as a backup automatic system.

The authority having jurisdiction may have additional requirements.

HAZARD

A computer room having dimensions of 20 ft. x 10 ft. x 10 ft.

A subfloor having dimensions of 20 ft. x 20 ft. x 1 ft.

No unclosable openings.

Ventilation to be shut down at system actuation.

No. 1 – Sketch of Hazard. Do an accurate sketch of the hazard area and record all dimensions and solid objects.

No. 2 – Design Calculation Sheet. Fill out the calculation sheet with the information required to determine total quantity of agent and percent of INERGEN agent concentration.

No. 3 – Preliminary Drawing – Complete a draft sketch of the piping layout to determine pipe lengths and number of fittings. Locate and number all node points, manifold designators, and nozzles.

No. 4 – Input Hazard Information – In the INERGEN Designer flow calculation program, input the required hazard information.

No. 5 – Pipe Data Input Section – Complete the pipe input section of the INERGEN Designer flow calculation program.

No. 6 – INERGEN Flow Calculation – Perform the INERGEN flow calculation and print out the Flow Report and Nozzle Performance Summary from the INERGEN Designer Program.

Distributed by SIRINA
An authorized ANSUL
Distributor

Typical Applications

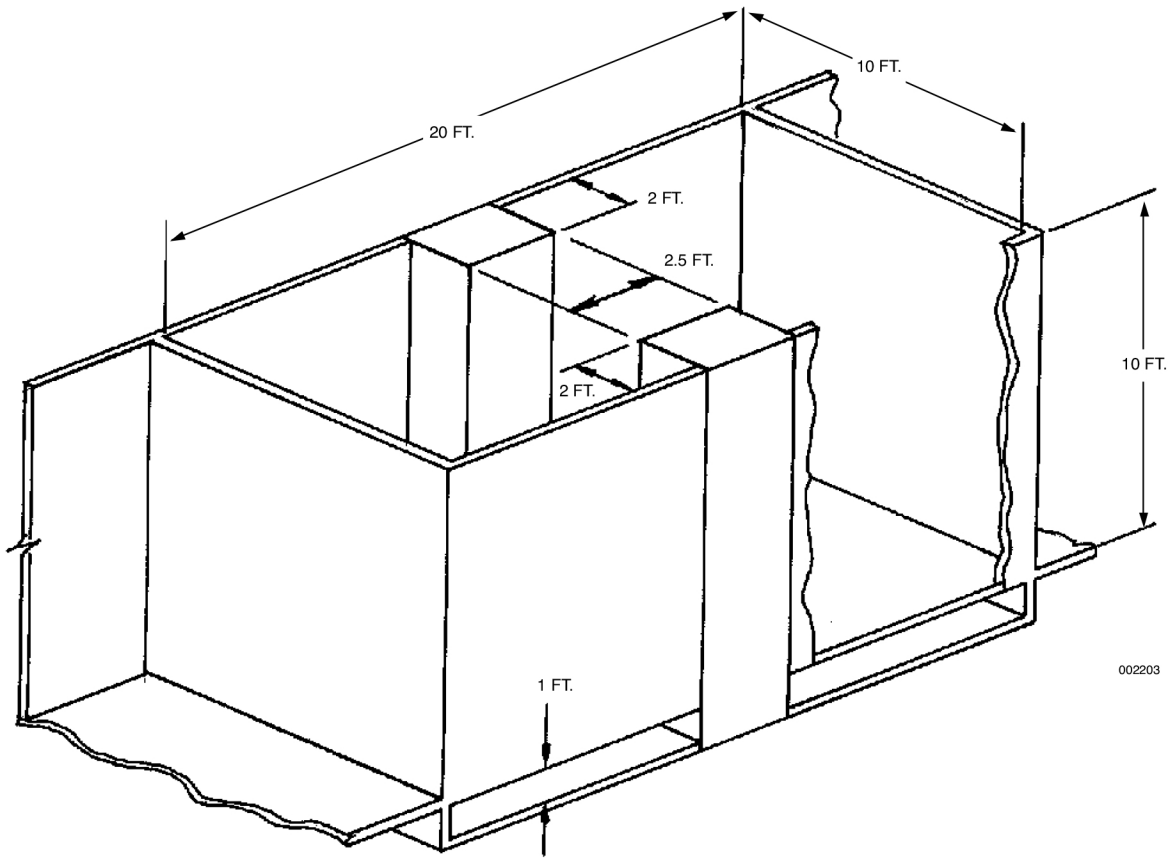

Distributed by SIRINA
An authorized ANSUL
Distributor

Distributed by SIRINA
An authorized ANSUL
Distributor

ANSUL
INERGEN DESIGNER
Version 2. 0. 1

File: Data file: F:\Design Manual\Design Manual Example.inr
Job: 1
Customer: Ansul Incorporated
Address: One Stanton Street
Marinette WI 54143
Country: USA
REMARKS: Design Section Example

Hazard Area Information

Area: Computer Room
Design concentration 34.2% at 60°Fahrenheit
Estimated maximum concentration 41.0% at maximum hazard temperature 80°Fahrenheit
Gross volume of enclosure 2000 cubic feet
Structural volume reductions 100 cubic feet
Net volume of enclosure 1900. cubic feet
Minimum INERGEN required 689.6 cubic feet
Approximate INERGEN supplied 798.1 cubic feet
Flooding factor .427 cubic feet of INERGEN per cubic feet of enclosure volume
Maximum allowable wall strength 5 lbs./sq. ft
Area consists of one volume
Volume 1: Length 20 ft Width 10 ft Height 10 ft
1 nozzles. Nozzle identifiers: 301

Area: Computer Room Subfloor
Design concentration 34.2% at 60°Fahrenheit
Estimated maximum concentration 41.0% at maximum hazard temperature 80°Fahrenheit
Gross volume of enclosure 200 cubic feet
Structural volume reductions 10 cubic feet
Net volume of enclosure 190. cubic feet
Minimum INERGEN required 69.0 cubic feet
Approximate INERGEN supplied 79.9 cubic feet
Flooding factor .427 cubic feet of INERGEN per cubic feet of enclosure volume
Maximum allowable wall strength 5 lbs./sq. ft
Area consists of one volume
Volume 1: Length 20 ft Width 10 ft Height 1 ft
1 nozzles. Nozzle identifiers: 401

Agent Storage Conditions

Number of cylinders: 2 each containing 439 cubic feet of INERGEN. Total agent 878 cubic feet
Engineering units (ft, cu ft, psia) are specified
Calculation based on 70 degree Fahrenheit pre-discharge Pipeline Temperature

Pipe Data Input

Sec Start	Sec End	Nominal Pipe Size	Length (ft)	Elev (ft)	90's	Side Tee	Thru Tee	Union/ Cplg	Qty cu ft	Eql (ft)
1	2	1/2 - 40 T	0.01	0.00	0	0	0	0		38.00

Typical Applications

ANSUL

INERGEN DESIGNER

UL listed EX4510, FMRC Approved (J.I.) 2Y0A0.AF, ULC listed CEx1161

Version 2.9.1

File: Data file: F:\Design Manual\Design Manual Example.inr
Job Number: 1

Pipe Data Input(Continued)

File: Data file: F:\Design Manual\Design Manual Example.inr

Sec Start	Sec End	Nominal Pipe Size	Length (ft)	Elev (ft)	90's	Side Tee	Thru Tee	Union/ Cplg	Qty cu ft	Eql (ft)
2	3	0 - DFLT	0.50	0.00	1	0	0	0		0.00
3	4	3/4 - DFLT	1.00	0.50	1	1	0	0	2 cyl	0.00
4	5	0 - DFLT	0.00	0.00	0	0	0	0		Orifice
5	6	0 - DFLT	3.50	0.00	0	0	0	0		0.00
6	301	0 - DFLT	13.50	2.80	2	1	0	0	835.00	0.00
6	401	0 - DFLT	18.00	-7.30	2	1	0	0	90.00	0.00

Distributed by SIRINA
An authorized ANSUL
Distributor

3 (End of Data Input File Printout)

Distributed by SIRINA
An authorized ANSUL
Distributor

Typical Applications

ANSUL
INERGEN DESIGNER
UL listed EX4510. FMRC Approved (J.I.) 2Y0A9.AF. ULC listed CEx1161
Version 2. 0. 1

File: Data file: F:\Design Manual\Design Manual Example.inr
Job Number 1 for Ansul Incorporated
Address: One Stanton Street
Marinette WI 54143
Country: USA
REMARKS: Design Section Example

Agent Storage Conditions

Storage pressure is 2175 psia at 70 degrees Fahrenheit.
439 cubic feet of INERGEN stored in each of 2 cylinders.
Total agent in storage is 878 cubic feet.
Time to discharge 790 cubic feet (90% of INERGEN) is 74.8 seconds
Maximum pressure downstream of manifold orifice is 1299 psia

Concentrations

Area	Volume	95% Time (sec)	Cu Ft INERGEN	Maximum Concentration at Max. Temp.	Minimum Concentration at Min. Temp.	Requested Concentration at Min Temp.
Computer Room	1900.	59	796.9	39.3% at 80°F	38.2% at 60°F	34.2% at 60°F
Computer Room Subfloor	190.	56	81.1	39.9% at 80°F	38.7% at 60°F	34.2% at 60°F

Concentrations are based on altitude of 4,000 ft mean sea level.

Free Vent Calculation

Area	Peak Rate	Maximum Wall Strength	Minimum Free Vent Area
Computer Room	1608.6 cfm	5.0 lbs./sq.ft.	62 sq. in.
Computer Room Subfloor	173.4 cfm	5.0 lbs./sq.ft.	7 sq. in.

Pressure Drop Results

Sec Start	Sec End	Nominal Pipe Size		Length (ft)	Equiv Length(ft)	Elev (ft)	Tee/ Mfld	Start psia	Term psia	Flow (cfm)
1	2	1/2	40 T	0.0	38.0	0.0	MFLD	1033	1006	453.1
2	3	3/4	80 T	0.5	2.4	0.0	MFLD	1006	1005	453.1

1 (Continued)

Distributed by SIRINA
An authorized ANSUL
Distributor

Typical Applications

ANSUL
INERGEN DESIGNER
UL listed EX4510. FMRC Approved (J.I.) 2Y0A9.AF, ULC listed CEx1151
Version 2.9.1

File: Data file: F:\Design Manual\Design Manual Example.inr
Job Number: 1

Pressure Drop Results (Continued)

Sec Start	Sec End	Nominal Pipe Size		Length (ft)	Equiv Length(ft)	Elev (ft)	Tee/ Mfld	Start psia	Term psia	Flow (cfm)
3	4	3/4	80 T	1.0	6.6	0.5	MFLD	1005	996	906.1
4	5	ORIFICE .266 INCHES DRILL NO. H						996	423	906.1
5	6	3/4	40 T	3.5	3.5	0.0		423	575	906.1
6	301	3/4	40 T	13.5	21.7	2.8	BULL	575	553	822.7
6	401	1/4	40 T	18.0	21.6	-7.3	BULL	575	561	83.4

Calculation based on 70 degree Fahrenheit pre-discharge Pipeline Temperature

Pipe and Fittings

Sec Start	Sec End	Nominal Pipe Size		Length (ft)	90's	Side Tee	Thru Tee	Unions/ Cplgs	Eql (ft)
1	2	1/2	40 T	0.0	0	0	0	0	Cyl Valve 38 ft
2	3	3/4	80 T	0.5	1	0	0	0	
3	4	3/4	80 T	1.0	1	1	0	0	
4	5	3/4	80 T		0	0	0	0	Man. Orifice
5	6	3/4	40 T	3.5	0	0	0	0	
6	301	3/4	40 T	13.5	2	1	0	0	
6	401	1/4	40 T	18.0	2	1	0	0	

Nozzle Performance Summary

Nozzle Number	Nominal Pipe Size		Drill Number	Drill Diameter	Quantity (cu ft) Discharged	Area Name
301	3/4	40 T	U	0.368	796.9	Computer Room
401	1/4	40 T	31	0.120	81.1	Computer Room Subfloor

Messages/Errors

2 (Continued)

Typical Applications

ANSUL
INERGEN DESIGNER
UL listed EX4510, FMRC Approved (J.I.) 2Y0A9.AF, ULC listed CEx1151
Version 2.0.1

File: Data file: F:\Design Manual\Design Manual Example.inr
Job Number: 1

ANSUL 150 bar INERGEN DESIGNER Version number 2.0.1
Calculation done on 5/28/02 at 10:40:20 AM
Concentrations are based on an altitude of 4000 ft above mean sea level.
Altitude correction factor is 0.85

Pipe schedule selected for pipe sizes downstream of the manifold orifice is based on the maximum pipe pressure for Grade A-53B, A-106B Seamless. To determine if other grades are acceptable, verify that the maximum pipe pressures for other grades are equal to or greater than the maximum anticipated downstream pressure.

Calculation by Ansul Incorporated
Jeff Harris
One Stanton Street
Marinette WI 54143 USA
Telephone: 715-735-7411
Fax: 715-732-3479

Distributed by SIRINA
An authorized ANSUL
Distributor

3 End of Printout