Document No.	SRT-01E

Righton

ZOOM PHOTO SLIT LAMP
Work guidance book

Product name

RS－1000

Division

REPAIR MANUAL

RIGHT MFG.CO.,LTD.

Ver	00

. .	△
. .	△
. .	△
. .	△

Instructions on Repair Works

The Zoom Photo Slit Lamp RS-1000 is designed for ophthalmic diagnosis and microphotography.
Do not use it for any other purposes.
This Repair Guide describes the matters, which should be observed to prevent harms to you and repair engineers and loss of the property in advance and to ensure safe repair service of the RS-1000.

This document uses the following symbols whose meanings are shown on the right. Have sufficient understanding of these symbols, and read through the repair guide.

This symbol shows that a death or personal injury might occur if you disregard this warning and use the instrument improperly.

This symbol shows that only a personal injury or damage to a material might occur if you disregard this precaution and use the instrument improperly.

This symbol indicates the possibility of electric shocks or electrocution. (Includes the situations, which correspond to the caution and warning.)

This symbol indicates high temperature.
(Includes the situations, which correspond to the caution and warning.)

This symbol indicates prohibited matters or actions.
Details of prohibition are marked in or near this symbol.

⚠ WARNING

⚠ HOT

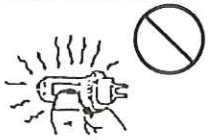

This product uses a halogen lamp for lighting, which becomes very hot while it is electrified. Before replacing the lamp, turn off the power, disconnect the power cable, and wait for ten minutes or more until the lamp cools down. Then, replace the lamp with a specified lamp.
If you are in a hurry to replace it, use thick cloth or the like to hold the lamp.

⚠ CAUTION

Make sure that the input power voltage indicated in the voltage indicator window on the illumination power supply and program power supply matches the input power source.

⚠ CAUTION

Please do not use it excluding the provided fuse.
When replacing a fuse, be sure to turn off the POWER switch and disconnect the power cord from the AC outlet.

Table of Contents

1 OUTLINE OF PRODUCT
1-1 General Specifications 6

2 SIMPLE INSPECTION AND REPAIR PROCEDURES
2-1 Quick Inspection (Delivery Inspection) 7
2-2 Repair Flow Chart 8

3 TROUBLESHOOTING
3-1 Troubleshooting 9

4 DETACHING COVER
4-1 Detaching Slide Base Cover 12

5 REPLACEMENT OF ELECTRIC PARTS
5-1 Layout of Boards and Electric Parts 14
5-2 Replacing illumination control board and Adjusting Variable Resistors 14
5-3 Replacing Light bulb 16

6 INSPECTION AND ADJUSTMENT
6-1 Tools Used for RS-1000
6-1-1 Tool list 17
6-1-2 Attaching tools 17
6-1-3 Inspection and usage of tools 18

6-2 Total Inspection
6-2-1 Adjusting rotational center of target rod tool 19
6-2-2 Inspecting microscope unit (Accuracy and optical system) 21
6-2-3 Inspecting slit lighting unit 23
6-2-4 Total reassemble inspection 25
6-2-5 Inspection standard list 26

6-3 Disassembly and Reassembly of Microscope Unit and Cleaning of Optical System
6-3-1 Disassembly and cleaning of binocular unit (including PD torque adjustment) 27
6-3-2 Disassembly and cleaning of zooming unit 30

6-4 Inspection and Adjustment of Slit Lighting Unit
6-4-1 Disassembly and cleaning of slit lighting unit 33
6-4-2 Adjustment and cleaning of slit blades 35
*Cleaning of slit blades
*Adjustment of wedge

6-4-3 Adjustment of slit opening/closing mechanism 37
*Adjustment of slit center (with respect to diaphragm)
*Adjustment of slit opening and closing action
*Adjustment of opening/closing knob torque
*Zero adjustment of slit width scale

6-5 Total adjustment
6-5-1 Focus and direction adjustment of microscope unit 39
6-5-2 Focus and up/down direction adjustment of slit image 41

Appendix ———— Electrical Diagram

1.OUTLINE OF PRODUCT

1-1 General Specifications

RS-1000 Body (RAA00300)

Lighting Unit
*Light source:12V,30W halogen lamp (Pre-center)
*Slit projection power:1x
*Slit width: Continuously variable from 0 to 14 mm
*Slit rotation angle: 90 degrees each to right and left
*Slit length: 0.2,1,2,5,10,14, and continuous from 1to 12
*Slit sliding dimension: 4.5 mm to right and left on target surface
*Slit tilt angle:0,5,10,15, and 20 degrees
*Filter: Heat ray absorbing, ND, green, and blue
*Halogen lamp voltage: 5 to11V, and 12 V (when boosted)

Microscope (Zooming unit, eyepiece tube, and eyepiece lens)
*Power variation: Parallel zooming system
*Zooming ratio: 4.3x
*Objective lens power: 0.6x to 2.58x
*Objective lens internal skew angle: 13.2
*Eyepiece lens power: 12.5x
*Total power:7.5x to 32.3x (when 12.5x eyepiece lens is used)
6x to 25.8x (when 10x eyepiece lens is used)
*Eyepiece diopter correction range :+5D to -5D
* PD adjustment range :55 to 75 mm

Slide Base
*Longitudinal and transverse motions: With a joystick
*Longitudinal and transverse motion range :100-x 110 mm (Longitudinal x transverse)
*Coarse adjustment: Moving the slide base with the joystick standing vertically.
*Fine adjustment: Turning down the joystick causes motion in that direction within the range of 15 mm diameter.
*Vertical motion: Rotating the joystick
*Vertical motion range: 30 mm vertically(15 mm each upward and downward from the 1-mm groove in the chin rest)

Dimensions and Weight of RS-1000 Body
*Dimension between table top surface and patient eye: 375 mm
*Reaching distances: 287 mm (Without photography unit)
340 mm (With Beam splitter)
*Working distance: 100.4 mm
*Distance between table top surface and observation optical axis: 399 mm
*Dimensions of RS-1000 body: 330 mm W x 735 mm H x 405 mm D
*Weight: Approx. 13 kg

2.QUICK INSPECTION AND REPAIR PROCEDURES

2-1 Quick Inspection (Delivery Inspection)

RS-1000 body

(1)Whether the RS-1000 is not damaged or dirty
(2)Whether the chin rest and slide base move smoothly
(3)Whether the operation levers and knobs move smoothly
(4)Wheter the eyepiece width of the microscope can be adjusted smoothly
(5)Wheter the lamp goes on
(6)Whether the light intensity of the lighting lamp is controlled and the boost switch functions properly
(7)Whether dust does not adhere to the lenses
(8)Whether the slit is free from wedge shape, dust or oil (Stand the attached target rod and check.)
(9)Whether the zoom power is varied smoothly

Power box

(1)Whether the power box is not damaged or dirty
(2)Whether power is turned on and off with the power switch normally

2-2 Repair Flow Chart

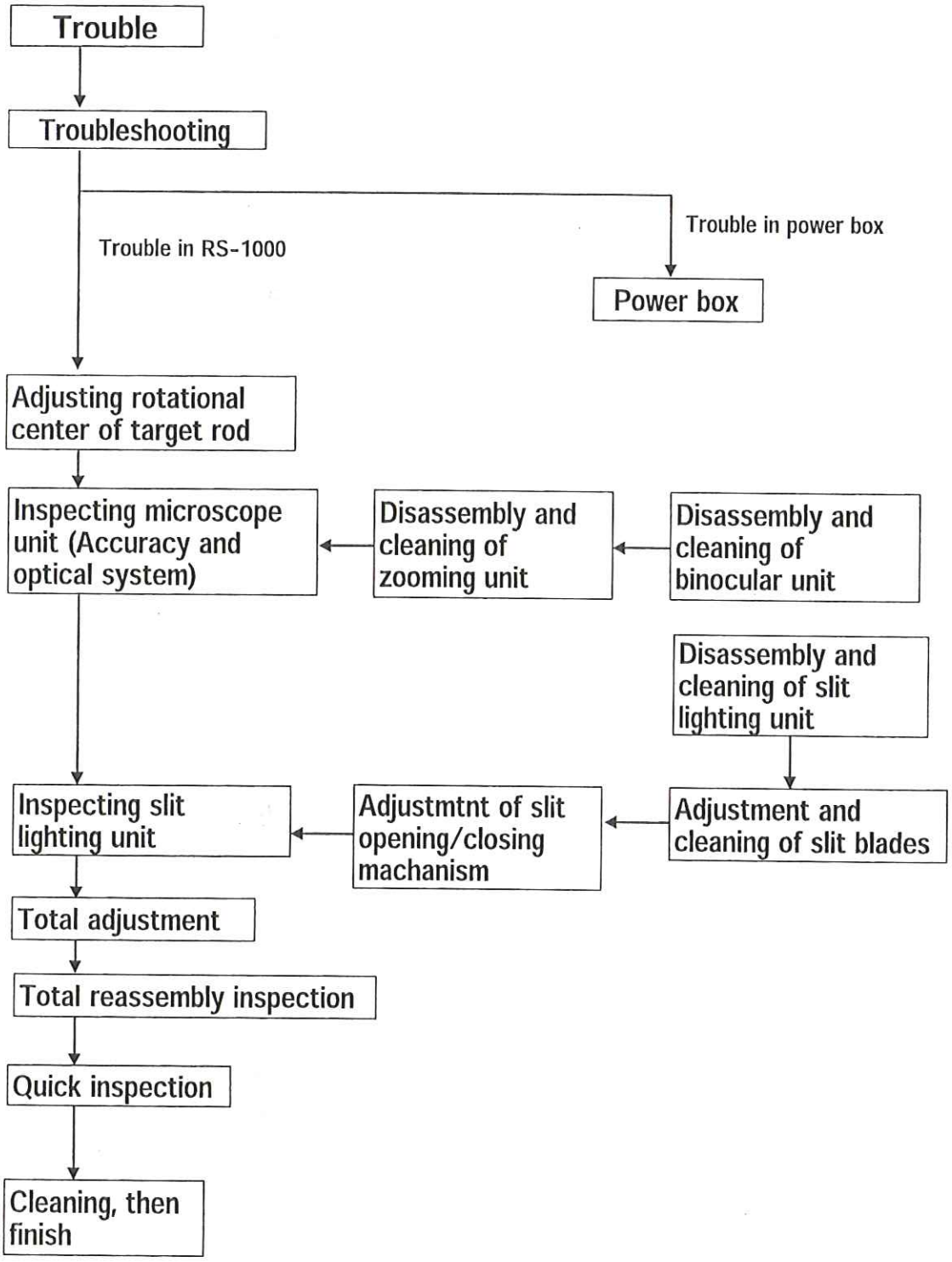

3 TROUBLESHOOTING

3-1 Troubleshooting

*Power Box

(1)The RS-1000 is not turned on, or nothing is displayed on the LED.

Causes:[1] The socket is unplugged. [2] The fuses have blown off. [3] The input voltage is set improperly.

Countermeasures :[1] Check the AC voltage and connect the cable properly. [2] Replace the fuses.
[3] Set the input voltage properly again.

*Illumination Lamp

(2)The slit illumination lamp is off though the program power is turned on.

Causes:[1] The lamp is burnt out. [2] The illumination cable connector is unplugged or loose.
[3] The illumination control board is defective. [4] The lamp socket is defective.

Countermeasures:[1] Replace the lamp. [2] Plug the connector properly.
[3] Replace the illumination control board. [4] Replace the lamp socket.

Refer to:[1] 5-3 "Replacing Light Bulb" [2] General wiring diagram of the RS-1000
[3] 5-2 "Replacing Illumination Control Board and Adjusting Variable Resistors"
[4] 5-3 "Replacing Light Bulb"

(3) The slit illumination lamp is liable to burn out.

Causes:[1] The lamp voltage is too high. [2] The illumination control board is defective.

Countermeasures:[1] Readjust the lamp voltage on the illumination control board.
[2] Replace the illumination control board.

Refer to:[1] & [2] 5-2 "Replacing Illumination Control Board and Adjusting Variable Resistors"

*Slit Functions

(4)The slit image is not projected though the lamp is on.

Causes:[1] The slit opening/closing function is lost. [2] The torque of the slit opening/closing knob is too low. [3] The filter does not stop at the click position.

Countermeasures:[1] Check if the link shaft, etc. are not caught mechanically.
[2] Rotate the torque adjusting screw in the center of the slit opening/closing knob to adjust the torque.
[3] Adjust the filter position with the filter selector lever and slit adjusting knob.

Refer to:[1] 6-4-1 "Disassembly and cleaning of slit lighting unit" and 6-4-3 "Adjustment of slit opening/closing mechanism"
[2] 6-4-3 "Adjustment of slit opening/closing mechanism"

(5)The slit image rotates by itself while observing the patient eye.

Causes:[1] The cable is twined around the light tower, and the slit unit rotates when swinging the light tower to the right or left.

Countermeasures:[1] Lay the cable properly.

(6)The slit becomes narrow by itself.

Causes:[1] The torque of the slit opening/closing knob is too low.

Countermeasures:[1] Rotate the torque adjusting screw in the center of the slit opening/closing knob to adjust the torque.

Refer to:[1] 6-4-3"Adjustment of slit opening/closing mechanism"

(7)Slit lighting is dark.

Causes:[1] The ND filter is used.
[2] The lighting intensity control knob is set at a low position.

Countermeasures:[1] Set the filter selector lever to "Heat ray absorbing filter".

(8)Lighting is uneven when the slit is fully opened.

Causes:[1] The lamp is not in position.

Countermeasures:[1] Detach the lamp, and check if it is attached properly.

Refer to:[1] 5-3 "Replacing light bulb"

(9)The slit is not closed fully.

Causes:[1] The slit opening/closing link rod is not adjusted properly.
[2] Foreign matters adhere to the slit blades.
[3] The slit blades are not adjusted properly.(Wedge shape)

Countermeasures:[1] Rotate the slit opening/closing link rod to adjust the slit.
[2] Clean the slit blades. [3] Adjust the wedge.

Refer to:[1] 6-4-3 "Adjustment of slit opening/closing mechanism"
[2]&[3] 6-4-2 "Adjustment and cleaning of slit blades"

(10)The "0" position of the slit opening/closing knob is not adjusted properly.

Causes:[1] The slit opening/closing link rod is not adjusted properly.

Cuntermeasures:[1] Rotate the slit opening/closing link rod to adjust the slit.

Refer to:[1] 6-4-3 "Adjustment of slit opening/closing mechanism"

(11)Oil or dust is seen on the slit blades.

Causes:[1] The slit blades are not cleaned sufficiently.

Countermeasures:[1] Clean the slit blades.

Refer to:[1] 6-4-2 "Adjustment and cleaning of slit blades"

(12)When the vertical slit is selected, it is not located at the center of the visual field.

Causes:[1] The centering knob is loose.
[2] The mirror base position is not adjusted properly.

Countermeasures:[1] Tighten the centering knob. [2] Adjust the mirror base position right and left.

Refer to:[1] 6-2-1 "Adjusting rotational center of target rod tool"

(13)When the horizontal slit is selected, it is not located at the center of the visual field.

Causes:[1] The mirror base position is not adjusted properly.

Countermeasures:[1] Adjust the mirror base position up and down.

Refer to:[1] 6-5-2 "Focus and up/down direction adjustment of slit image"

*Microscope

(14)The patient eye or slit image cannot be brought into focus.

Causes:[1] Diopter adjustment is done improperly. [2] The eyepiece is not inserted fully.

Countermeasures:[1] Retry diopter adjustment. [2] Insert the eyepiece to the end completely.

Refer to:[1] Page 15 of the instruction manual.

(15)The focus is not adjusted at a high power, though it is properly adjusted at a low power.

Cause:[1] The depth of focus is reduced at a high power.

Countermeasures:[1] Select a high power when adjusting the focus on the patient eye by moving the slide base back and forth.

(16)The pupil distance increases by itself. It increases when diopter adjustment is done.

Causes:[1] The torque of the prism box is too low.

Countermeasures:[1] Rotate the torque adjusting screw to adjust the torque.

Refer to:[1] 6-3-1 "Disassembly and cleaning of binocular unit"

(17)The cornea endothelium cannot be observed through the left eyepiece.

Causes: The cornea endothelium adapter is exclusively designed for the right eyepiece.

Countermeasures: Use the right eyepiece to observe the cornea endothelium.

(18)the optical system is dirty (with dust or mold).

Causes: The dust cover is not used, or the humidity is high.

Countermeasures: Use the dust cover. Maintain the humidity low at all times. Clean the optical system.

Refer to:[1] 6-3-1 "Disassembly and cleaning of binocular unit " and 6-3-2 " Disassembly and cleaning of zooming unit "

*Video

(19)No image is seen on the video screen, though the patient eye is seen through the eyepiece.

Causes:[1] The beam splitter unit is not set to the "IN" position.

[2] The video cables are connected improperly, or the video camera is set improperly.

Countermeasures:[1] Set the beam splitter to the "IN" position.

[2] Connect the cables and set the video camera properly.

(20)A dark image is seen on the video screen, though the patient eye is seen clearly through the eyepiece.

Causes:[1] The diaphragm of the CCTV unit is closed too much.

[2] The video camera is set improperly.

Countermeasures:[1] Open the diaphragm of the CCTV unit more.

[2] Set the video camera properly.

(21) The video image is out of focus, though the image seen through the eyepiece is in focus.

Causes:[1] The focus of the CCTV unit is not adjusted properly.

Countermeasures:[1] Set the high magnification and adjust the focus of the CCTV unit with the focusing ri

4. DETACHING COVER

4-1 Detaching Slide Base Cover

(1) Unplug the connectors.

(2) Detach the gear cover.

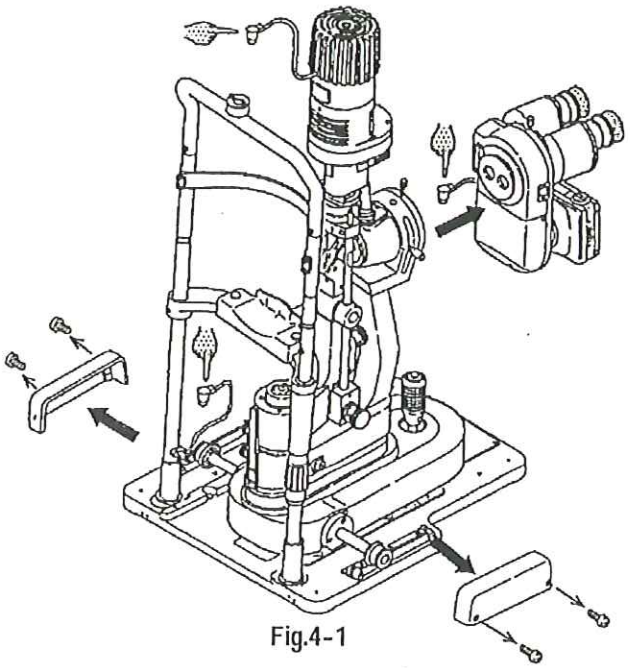

Fig.4-1

(3) Dismount the slide shaft. Turn the RS-1000 on its side.

(4) Remove eight set screws.

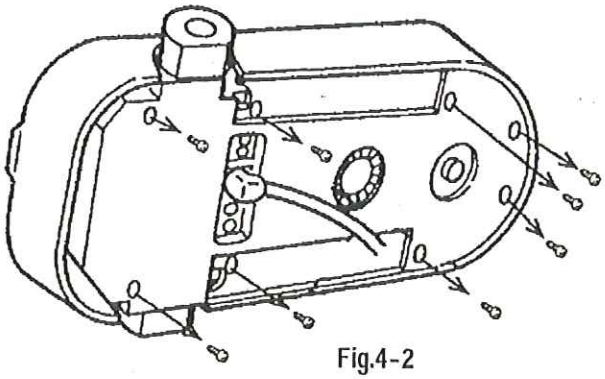

Fig.4-2

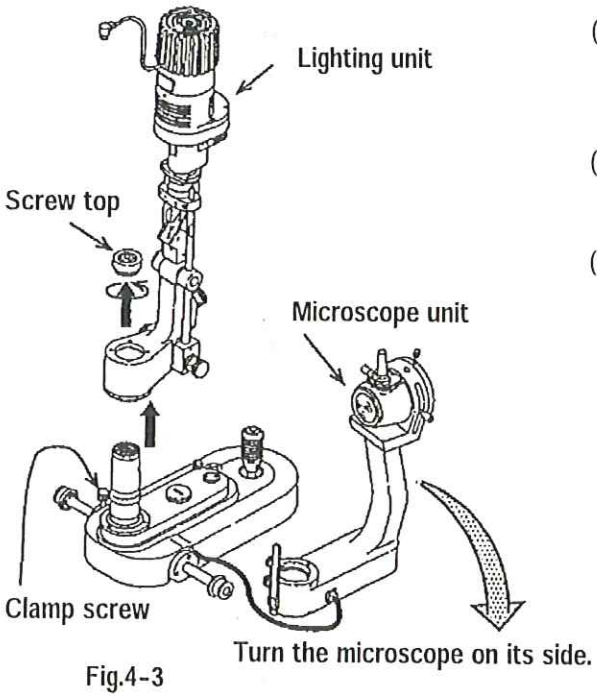

Fig.4-3

(5) Tighten the clamp screw. Loosen and remove the screw top.

(6) Draw out the lighting unit, and turn it on its side.

(7) Draw out the microscope unit, and turn it on its side.

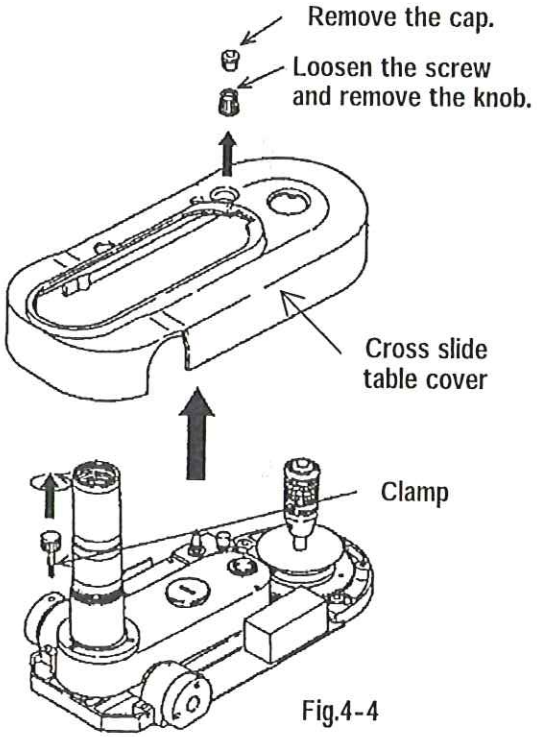

Fig.4-4

(8) Remove the cap from the illumination control knob.

(9) loosen the set screw in the illumination control knob and remove the knob.

(10) Remove the clamp.

(11) Dismount the cross slide table cover.

5-1 Layout of Boards and Electric Parts

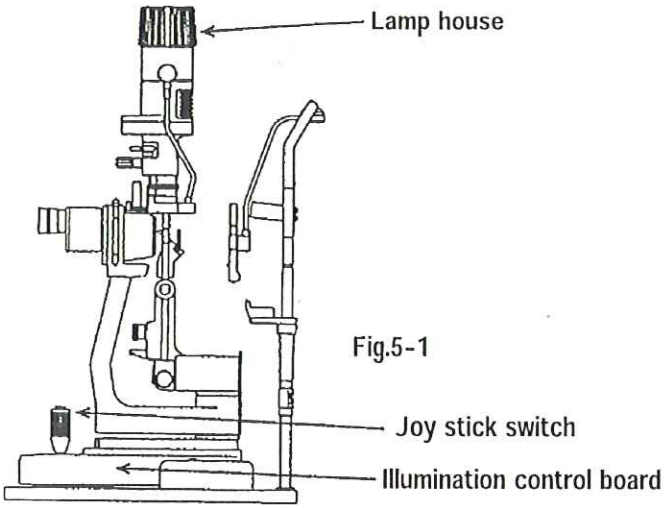

Fig.5-1

5-2 Replacing illumination control board and adjusting variable resistors

(1) Detach the slide base cover. (For details, see 4-1 "Detaching Slide Base Cover".)

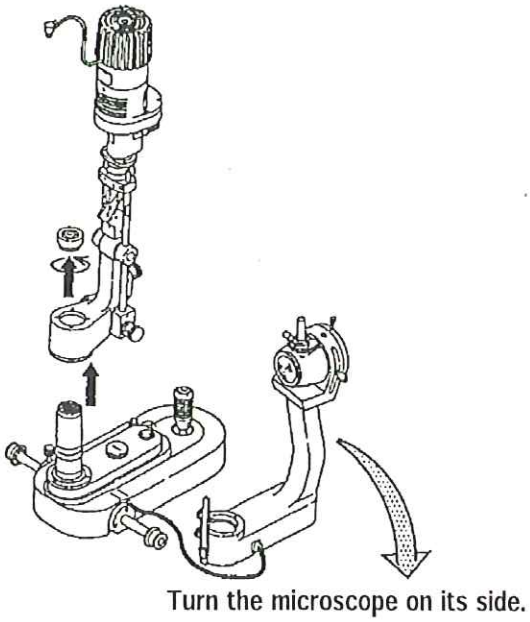

Fig.5-2

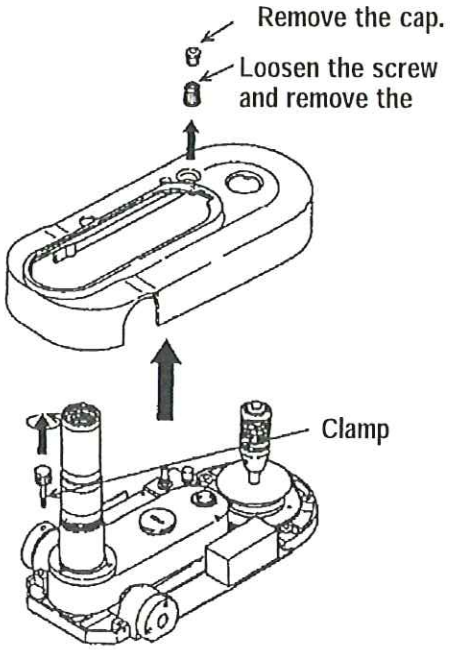

Fig.5-3

(2) Remove the illumination control board set screws.
(3) Unplug two internal connectors.
(4) Replace the illumination control board with a new board. Plug the internal connectors.
(5) Fix the board with the set screws.

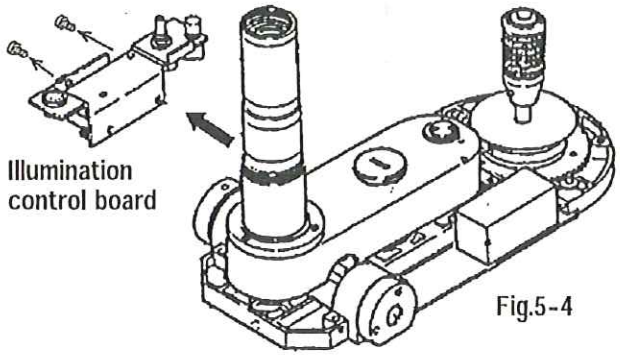

Fig.5-4

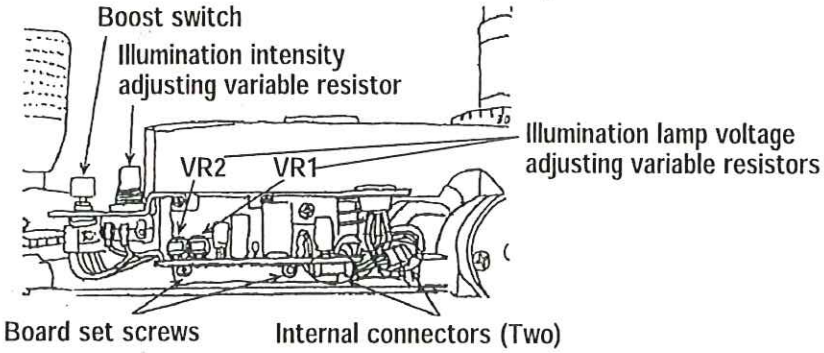

Details of illumination control Fig.5-5

(6) Rotate the illumination intensity adjusting variable resistor on the illumination control board fully counterclockwise.
(7) connect the cables and turn on the lamp.

Adjust the lamp voltage adjusting variable resistors (VR1 or VR2)
(8) Rotate VR1 and VR2 on the board fully counterclockwise with a screwdriver.
(9) Rotate the light intensity adjusting variable resistor on the lighting control board fully clockwise. (to maximize the light intensity)
(10) Measure the lamp voltage with a digital multi-meter (in the DC voltage mode).
(11) Rotate VR1 to adjust the Voltage to the 11.0V range (between 10.95 and 11.05 V).
(12) Hold the boost switch and measure the lamp voltage with the digital multi-meter.
(13) Rotate VR2 to adjust the voltage to the 12 V range (between 11.95 and 12.05 V).
(14) Reassemble the parts in the reverse order.

The lamp becomes hot. Be careful.
Measure the lamp voltage between these terminals.
(Fig.5-6)

5-3 Replacing Light bulb

CAUTION

Be sure to disconnect the power cord from the AC outlet before replacing the lamp. The light bulb becomes very hot in operation. When removing the lamp, be very careful. Wait for ten minutes or more after the lamp goes out until the lamp comes cool . If it is necessary to replace the lamp quickly, use thick cloth, etc. to hold the lamp.

(1) Remove three set screws (plastic screws), and detach the cover.
(2) Loosen the lamp set screw. Rotate the fixing bracket sideways.
(3) Pull out the lamp socket.
(4) Hold the lamp socket, and draw out the lamp from the lamp socket.
(5) Engage the spring on the lamp house with the groove in the lamp socket properly and insert a new lamp
(6) Reassemble the parts in the reverse order. The light bulb cap set screw are made of plastic. If they are tightened too fast, they may be broken. Be careful not tighten them too fast.

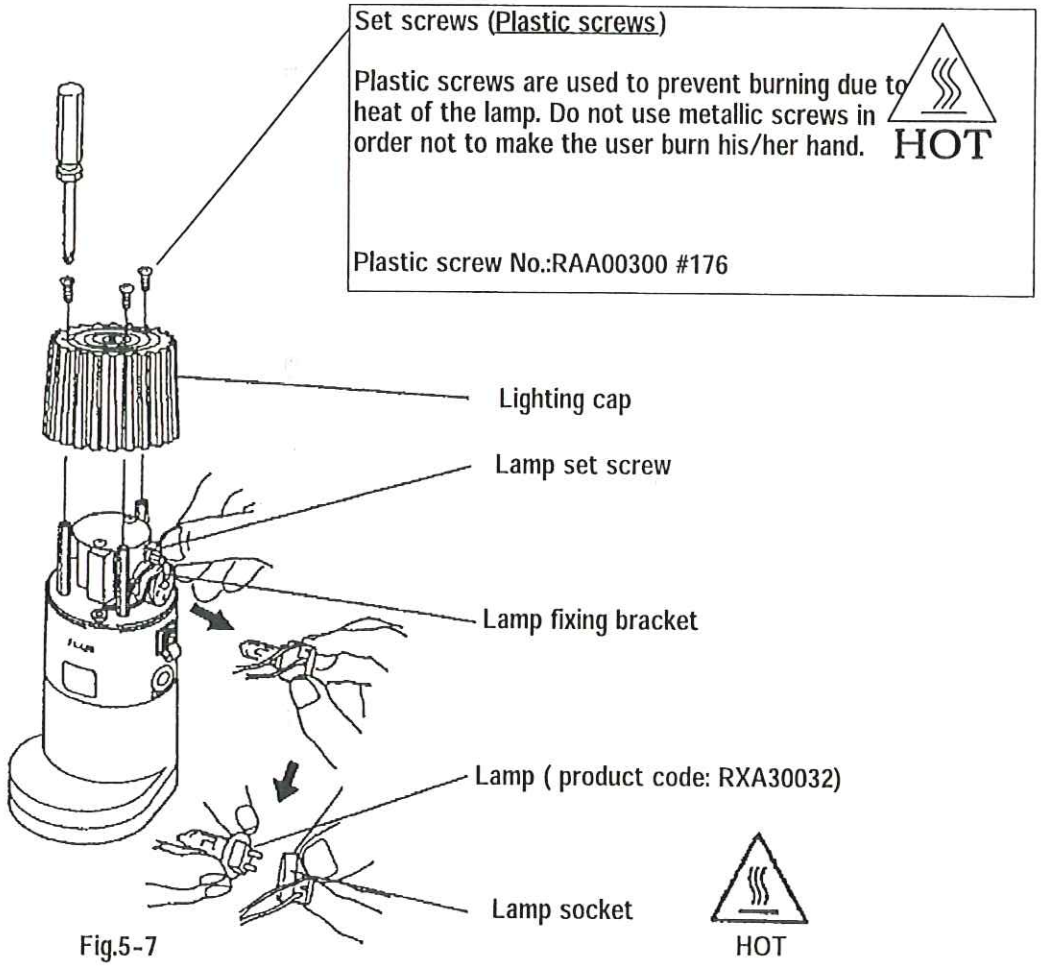

Fig.5-7

6. INSPECTION AND ADJUSTMENT

6-1 Tool Used for RS-1000

6-1-1 Tool list

Exclusive tools

J-09008	Diopter telescope
J-40001	Eyepiece tool scale1
J-40002	Eyepiece tool scale2
J-40003	Non-decenter eyepiece tool
J-40010	Target tool

Because two difference are J-40001 has the scale in X axis and J-40002 has the scale in X axis and Y axis. Therefore, you may use which eyepiece.
Thereafter, it is written as eyepiece.

6-1-2 Attaching tools

Use J-40010.

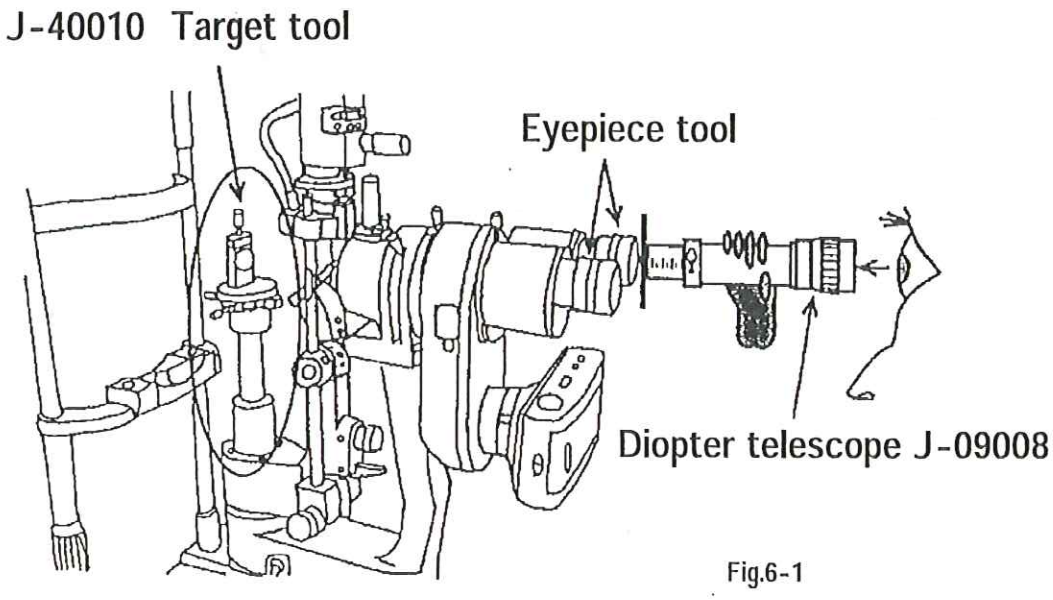

Fig.6-1

6-1-3 Inspection and usage of tools

* Diopter adjustment of diopter telescope J-9008

(1) Loosen the set screw. Adjust the line to " 0D ".
(2) Look at a white wall or paper at a short distance. Gradate the background to facilitate focusing.
(3) Adjust the diopter in the same manner as the eyepiece diopter adjustment of the slit lamp.
Rotate the diopter adjusting ring fully counterclockwise.
Rotate the diopter adjusting ring clockwise slowly to the position where the line in the eyepiece is seen most clearly. If the ring is rotated excessively, rotate it counterclockwise again, then retry focusing.

Note: If this adjustment is done incompletely, erroneous values are obtained in focus inspection.

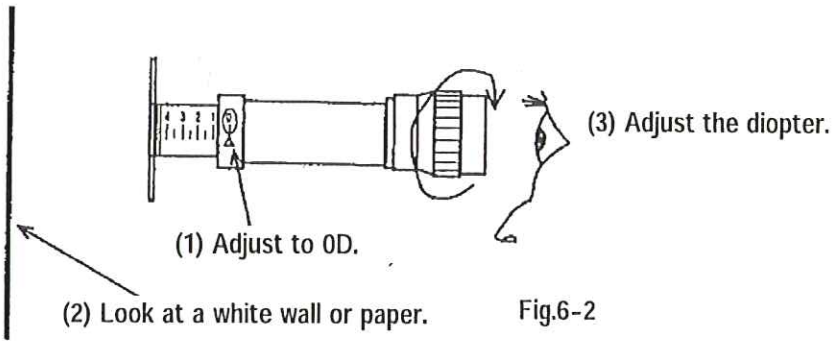

Fig.6-2

* Accuracy of diopter reticle of eyepiece tool J-40001(J-40002) (0DP check)

(1) Prepare the diopter telescope J-9008. Adjust diopter of the diopter telescope.
(2) Rotate the diopter adjusting ring of the eyepiece tool fully counterclockwise.
(3) Combine the diopter telescope with the eyepiece tool, and look at a white wall or paper through them.(See fig. 6-3)
(4) Look through the eyepiece tool using the diopter telescope.
(5) Rotate the diopter adjusting ring of the eyepiece tool clockwise slowly to the position where the reticle of the eyepiece tool is seen most clearly.
If the ring is rotated excessively, rotate it counterclockwise again, then retry focusing.
(6) When the focus is adjusted, check if the eyepiece is adjusted to " 0 ".
If the focus is not adjusted properly, loosen three set screws of the diopter ring and adjust the position.

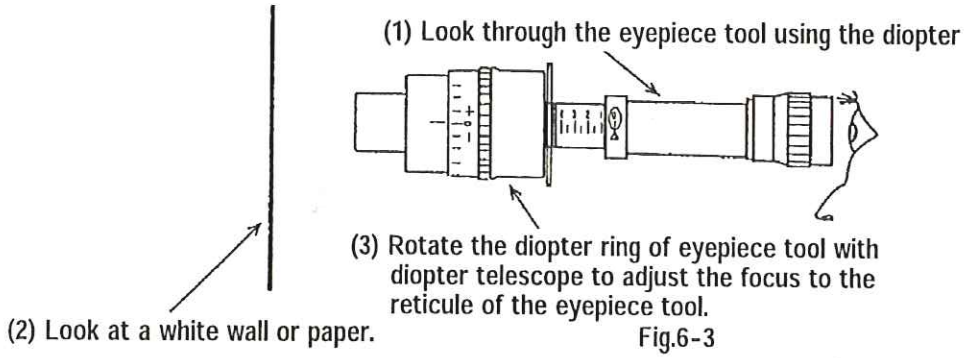

Fig.6-3

6-2 Total Inspection

6-2-1 Adjusting rotational center of target rod tool

J-40010 Target tool (for precise inspection and adjustment)

Loosen the set screw and turn the target surface toward the microscope.
Use J-40010.

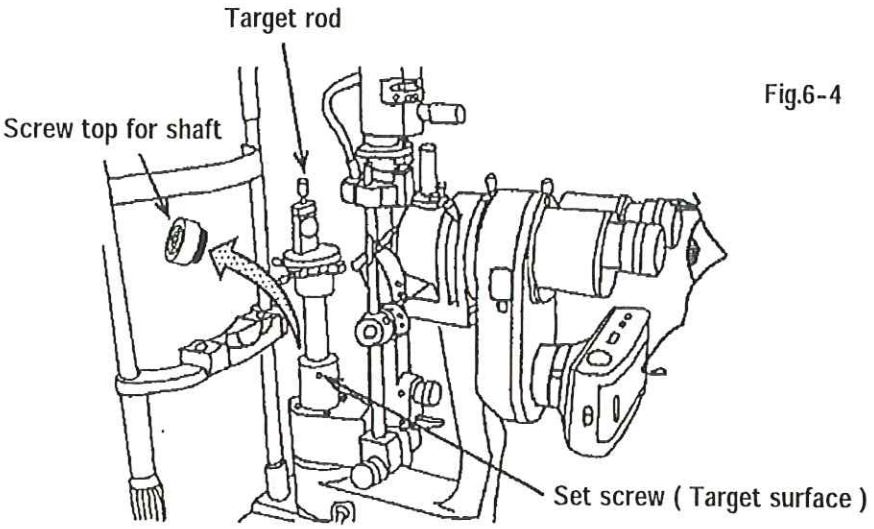

Fig.6-4

(1) Turn on power. Adjust the slit width to 0.5 mm.

(2) Adjust the power to 16x.

(3) Rotate the focus adjustment knob of the target rod tool to adjust the focus on the slit.

(4) swing the light tower to the right and left to check the movement of the slit image.

(5) If the slit image moves to the right or left, see Fig.6-5 shown on page 20 and adjust the slit position right and left, also adjust the target position back and forth.

(6) Adjust these positions to the condition (A) shown in page 20 where the slit image will not move even when the light tower is swung to the right and left by 90 degrees each.

Note1: The position where the slit image does not move is not always located at the center of the eyepiece.
Note2: The focus and/or the value obtained in the optical axis inspection may be incorrect if this adjustment is not done completely.

Remark: The target rod supplied with the product can be used if quick inspection is enough.

Slit Rotation Axis Adjustment Procedures

Condition
Slit position: Center
Target surface: Center of the rotate axis

Best condition

The slit image stays at the center even if the light tower is swung to the right and left by 90 degrees each.

Slit movement:
The slit moves to the right even if the light tower is swung to the right and left.
Condition
Slit position: Shifted slightly to the right.
Target surface: Center of the rotate axis
Adjustment procedure: Move the slit slightly to left to adjust to the center of the rotation axis.

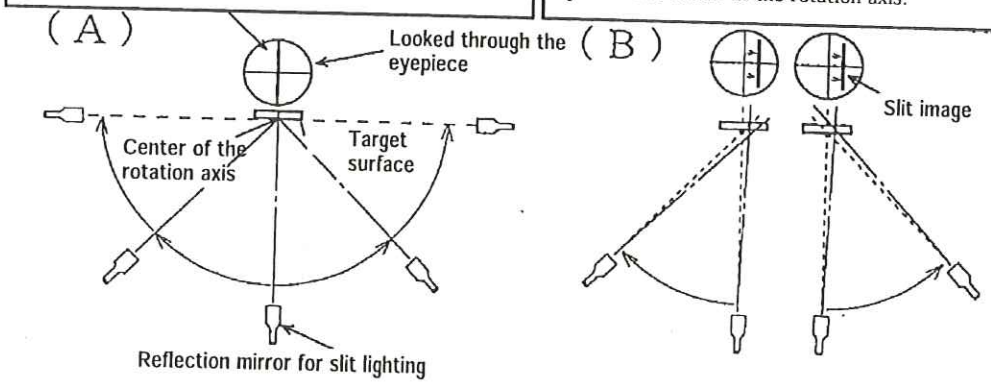

Slit movement:
The slit moves to the right when the light tower is swung to the right(i.e.,in the same direction).
Condition
Slit position: Center of the swing shaft.
Target surface: Close to the microscope.
Adjustment procedure: Move back the target.

Slit movement:
The slit moves to the left when the light tower is swung to the right(i.e.,in the opposite direction).
Condition
Slit position: Center of the swing shaft.
Target surface: Distant from the microscope.
Adjustment procedure: Move the target to the front.

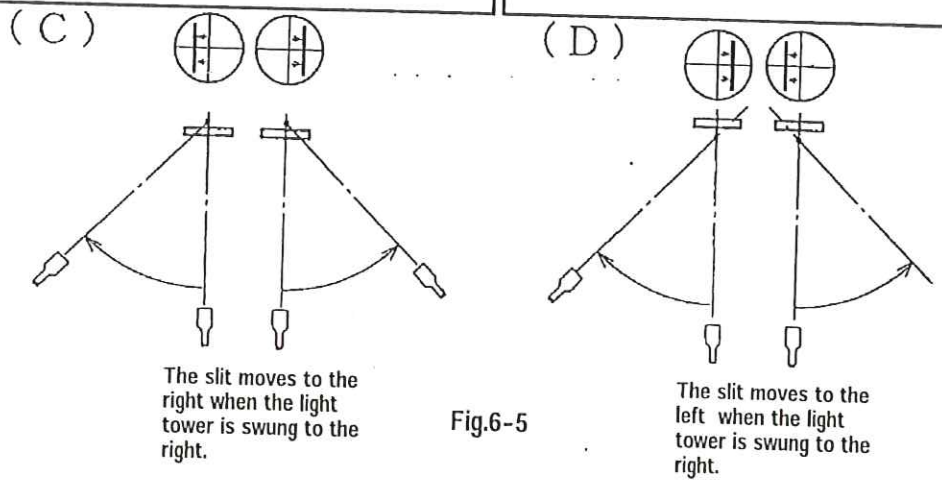

Fig.6-5

6-2-2 Inspecting microscope unit(Accuracy and optical system)

--Optical Accuracy Inspection--

* Setting the "0" position

(1) Attach the target tool.(J-40010)
(2) Attach the eyepiece tool to the right and left eyepieces.
(3) Open the slit fully. Set the power to the maximum(32.3x). Adjust the diopter line of the right and left eyepieces to "0".
(4) Adjust diopter of the diopter telescope.(See 6-1-3 "Inspection and usage of tools".)
(5) Look at the target through the diopter telescope and the "right eyepiece" of the microscope.
(6) Adjust the focus with the target longitudinal adjusting knob.

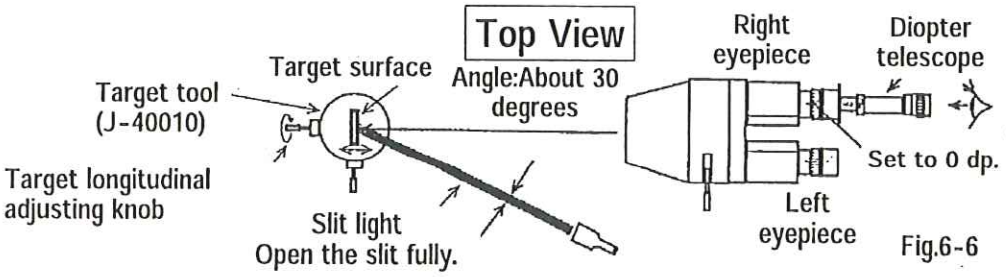

Fig.6-6

* Parfocal measurement and right and left diopter difference measurement based on the focus at the maximum power of the right eyepiece

(7) Set the power to the minimum(i.e.7.5x). Rotate the diopter adjusting ring of the "right" eyepiece to adjust the focus. Read the division of the eyepiece.

Focus of the right eyepiece at lower power: Standard value +0.75/-0.75 dp. Or less (Parfocal)

(8) Set the diopter telescope to the left eyepiece, look at the target, and rotate the diopter ring of the left eyepiece to adjust the focus. Read the division of the eyepiece.

Set the power to the maximum, and read the division of the eyepiece in the same way.
Focus of the left eyepiece at minimum power: Standard value +0.75/-0.75 dp. or less
Focus of the left eyepiece at maximum power: Standard value +1/-1 dp. or less

If the measured values are remarkably far from the standard values and detrimental to observation or photography, the microscope should be repaired. Special tools are needed to repair the microscope. Consult Right.

* Inspection of "optical axis misalignment" based on the focus at the maximum power of the right eyepiece

Inspecting Inward and Outward of the optical axis

(9) Set the power to the maximum at the "0" position adjusted on the front page. Observe the target through the right eyepiece without using the diopter telescope. Carry out diopter adjustment of both the right and left eyepieces, since the diopter telescope is not used. Do not move the target.

(10) Select the vertical slit. Rotate the slit width adjusting knob to adjust the vertical reticle line of the right eyepiece to the right or left side of the vertical slit.

(11) Look through the left eyepiece, and read the degree of shift of the vertical slit line on the reticle scale.

Standard values of the inside and outside of the optical axis:

Between two divisions inside to zero division outside

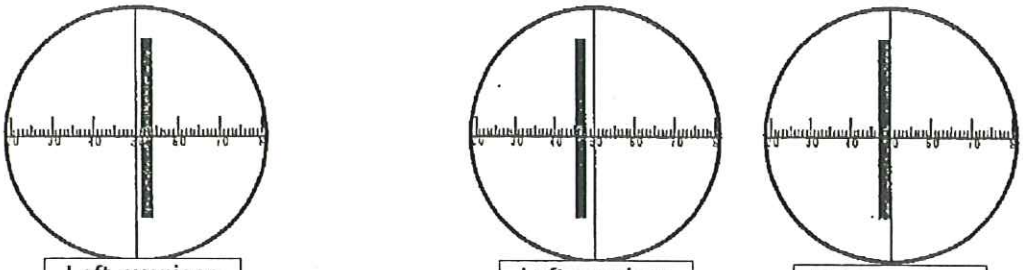

Left eyepiece — Four divisions outward, which are out of standard

Fig.6-7

Left eyepiece — Two divisions inward, which are the limit

Right eyepiece — Adjust the slit line to the reticle line to make the "0" position

Vertical inspection of optical axis

(12) Set the power to the maximum at the "0" position adjusted on the front page. Observe the target through the right eyepiece without using the diopter telescope. Carry out diopter adjustment of both the right and left eyepieces, since the diopter telescope is not used. Do not move the target.

(13) Select the horizontal slit. Rotate the left eyepiece only by 90 degrees.
Rotate the slit width adjusting knob to adjust the horizontal scale line of the right eyepiece to the upper or lower side of the horizontal slit.

(14) Look through the left eyepiece, and read the degree of shift of the horizontal slit line on the reticle scale.

Standard value of optical axis vertical inspection:

Within one division upward or downward

Rotate the left eyepiece only by 90 degrees.

Make the scale vertical.

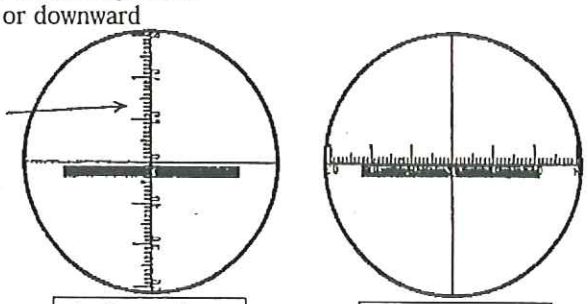

Fig.6-8

Left eyepiece — one division, which are the limit

Right eyepiece — Adjust the line to make the "0" position

If the measured values are remarkably far from the standard values and detrimental to observation or photography, the microscope should be repaired. Special tools are needed to repair the microscope. Consult Right.

6-2-3 Inspecting slit lighting unit

--Inspection of Slit Blades--

(1) Attach the target rod. (The target rod supplied with the product can be used.)
(2) Set the slit length to 14mm.
(3) Set the magnification power to about 16x to observe the whole slit.
(4) Inspect the slit blades as shown below.
(5) If some problem is found, advance to 6-4-2 "Adjustment and cleaning of slit blades" and adjust or clean the slit blades.

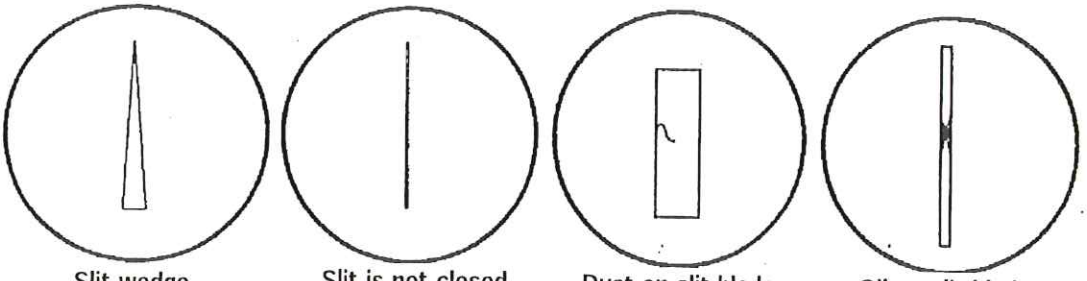

Slit wedge (1) | Slit is not closed (2) | Dust on slit blades (3) | Oil on slit blades (4)

Fig.6-9

--Inspecting Vertical Position of Slit Image--
(1) Stand the target tool.
(2) Make the slit horizontal.
(3) Rotate the tool eyepiece by 90 degrees. Make the reticle scale vertical.
(4) The center of the slit opening should be located within 2.5 vertical divisions from the eyepiece center. (Fig.6-10 show the slit whose center is shifted upward by 2.5 divisions, which are the limit.)

Standard vertical misalignment of slit: Within 2.5 divisions each

(5) If adjustment is needed, advance to 6-5-2 "Focus and up/down direction adjustment of slit image".

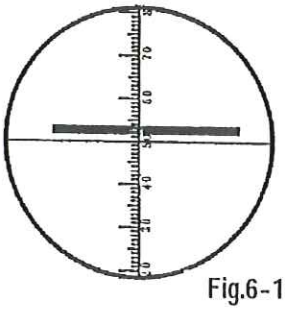

Fig.6-10

--Inspection of Slit Image Focus--

(1) Attach the target tool, adjust the power to the maximum(32x), and make the slit vertical. Maximize the light intensity.

(2) Observe the slit with the right eyepiece, and bring the slit into the best focus with the target longitudinal adjusting knob.

(3) Swing the light tower to the right and left by 45 degrees each, and check if the movement of the slit is within 5 division.

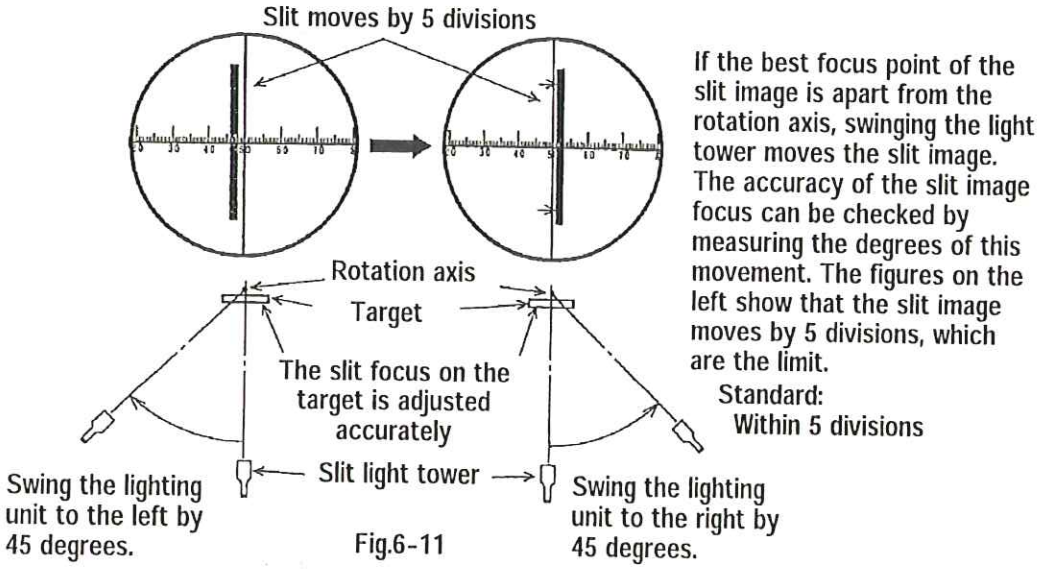

Fig.6-11

(4) If the focus of the slit image is out of standard, advance to 6-5-2 "Focus and up/down direction adjustment of slit image".

--Inspection of Light Field Diaphragm and Slit Center Position--

(1) Stand the target tool and carry out the adjustment shown in 6-2-1 "Adjusting rotational center of target rod tool".

(2) Maximize the power and adjust the light field diaphragm to 0.2mm. Make the slit vertical and keep it closed first. Observe the slit with both eyes.

(3) Open the slit slowly, and make sure that the right and left slit edges are seen. Stop opening at the Position where either the right or left slit line overlaps the frame of the light field diaphragm.

(4) Read the position of the opposite slit line. Standard: Light field center (0.1mm)

(5) If the read slit line position is out of standard, advance to 6-4-3.

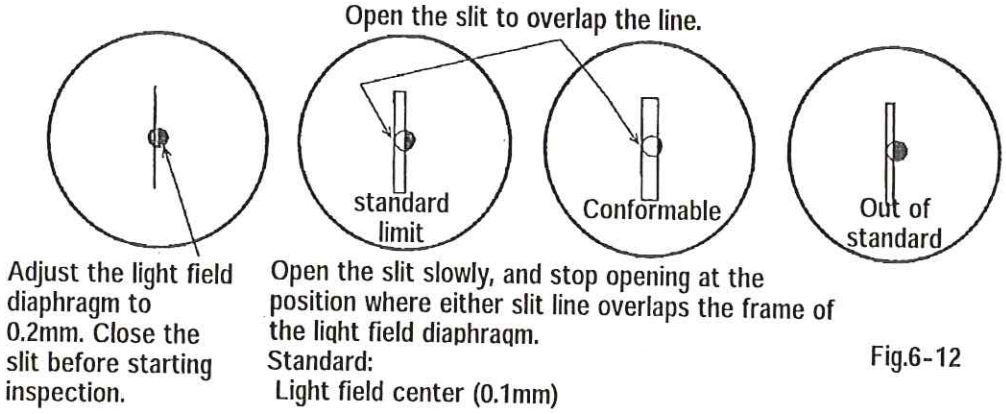

Fig.6-12

6-2-4 Total reassembly inspection

--Inspection of Microscope Focus and Direction--

Direction inspection

(1) Attach the target tool. Carry out the adjustment shown in 6-2-1 "Adjusting rotational center of target rod tool".

(2) Set the eyepiece tool(J-40001), maximize the power(32x), and make the slit very narrow and vertical.

(3) Observe the slit with each eye to measure the slit position. The slit observed with each eye should be within 2.5 divisions from the center. (Microscope direction inspection)

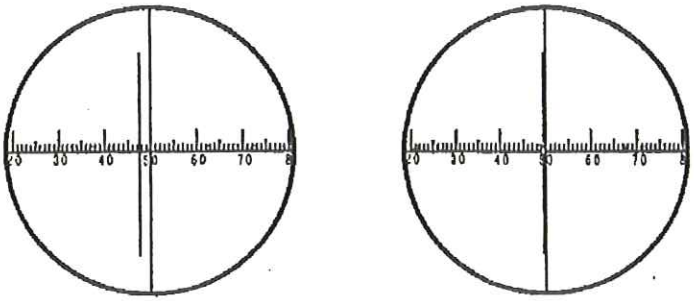

Left eyepiece:
2.5 divisions, which are the limit

Right eyepiece:
0.5 divisions, which are the limit

Fig.6-13

Focus inspection

(4) Make sure that the center of the slit rotation axis stays at the adjusted position.

(5) Open the slit fully, adjust the radiation angle to about 30 degrees, maximize the power, and maximize the slit light intensity.

(6) Apply the diopter telescope to the right eyepiece, and rotate the diopter adjusting ring of the eyepiece tool to bring the target into the best focus. Read the value of the diopter adjusting ring.

Standard: Between +1.5dp. To -1.5 dp.

(7) If the focus and/or direction of the microscope does not meet the standard, Advance to 6-5-1 "Focus and direction adjustment of microscope unit"

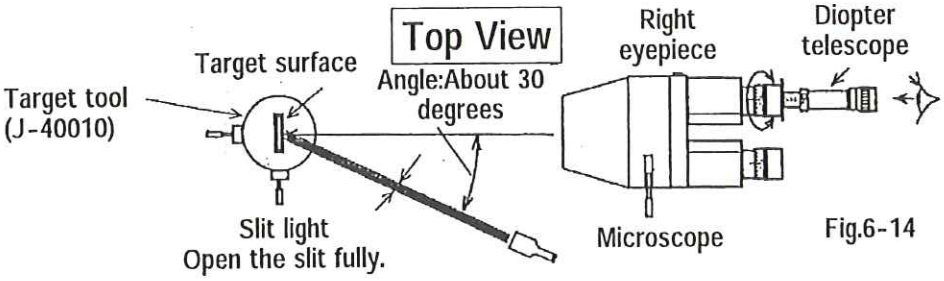

Fig.6-14

6-2-5 Inspection standard list

* Accuracy of Microscope

(Parfocal and diopter difference)

Right focus at high power(32x):	Measure based on this focus position.
Right focus at low power(7.5x):	Between -0.75 and +0.75 dp. (Parfocal)
Left focus at high power(32x):	Between -1 and +1 dp. (Diopter difference)
Left focus at low power(7.5x):	Between -0.75 and +0.75 dp. (Diopter difference and Parfocal)

(Optical axis)

Optical axis inward and outward inspection:
Between 2 divisions inward and 0 division outward.
Optical axis vertical inspection: Within 1 upward or downward division each.

* Accuracy of Slit Lighting

Vertical shift of slit: Within 2.5 upward or downward divisions each
Slit image focus: Slit movement below 5 divisions when the lighting unit is swung to the right and left by 45 degrees each
Shift of slit knob divisions: Within 1 division
Light field diaphragm and slit centers: Center of the light field (0.1mm)

* Assembly accurasy(32x)

Shift of swing shaft center of microscope: Within 2.5 divisions for either the right or left eyepiece
Out-of-focus of swing shaft center of microscope: Between -1.5 dp. And +1.5 dp.

6-3 Disassembly and Reassembly of Microscope Unit and Cleaning of Optical System

6-3-1 Disassembly and cleaning of binocular unit (including PD torque adjustment)

--Cleaning of Optical System--

(1) Draw out the eyepiece lens.
Remove the prism box.

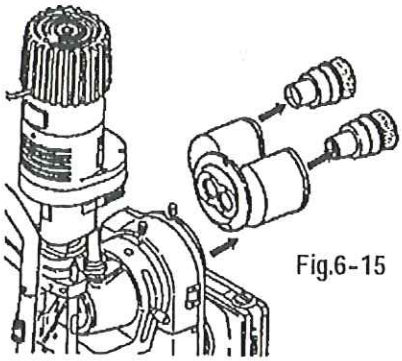

Fig.6-15

(2)Remove the cover screw from the prism box.
Detach the cover.

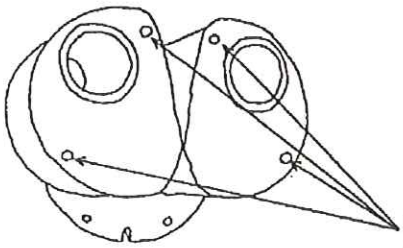

Fig.6-16

Remove four screws.

(3) Remove three base plate set screws from the eyepiece sleeve, and detach the base plate.

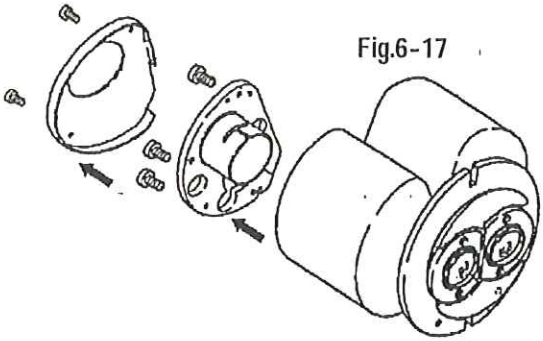

Fig.6-17

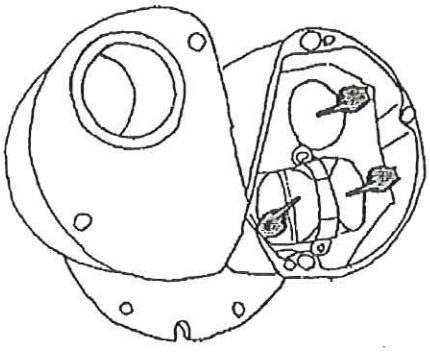

Cleaning point

Clean the surface only without disassembling the prism.

Remove dust and stain.

Fig.6-18

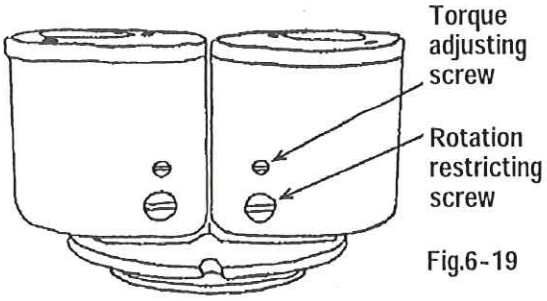

Fig.6-19

(4) Rotate the torque adjusting screw counterclockwise to loosen the screw completely. It is not necessary to remove the screw.

(5) Remove the rotation restricting screw from the prism box.

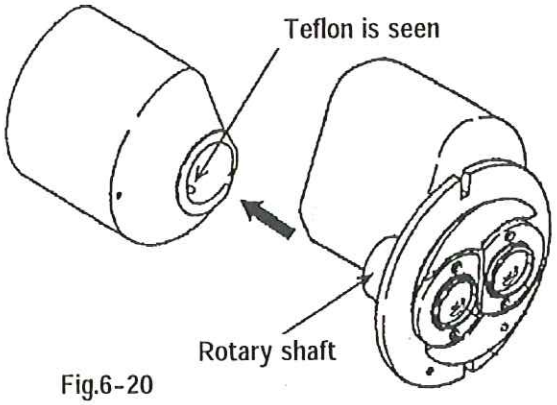

Fig.6-20

(6) Draw out the prism box.

(7) Remove Teflon. Do not lose it. (See Figs.6-20 and 6-21.)

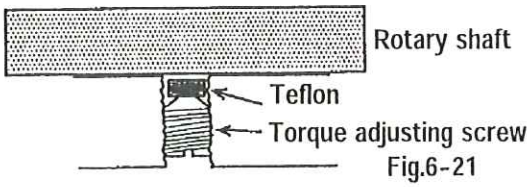

Fig.6-21

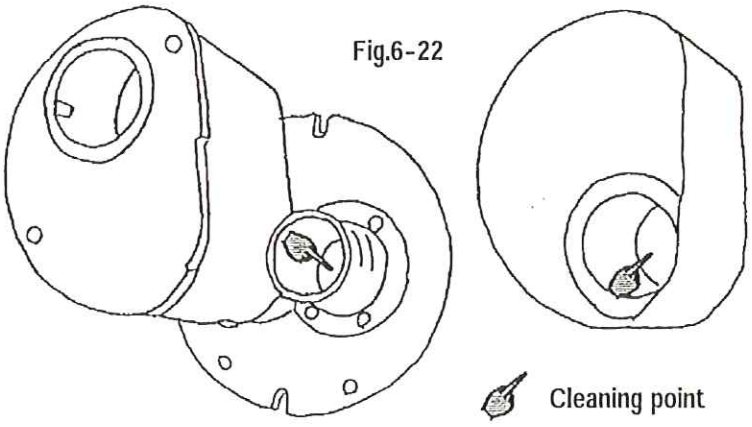

Fig.6-22

(8) Keep the prism in the box, and remove dust and mold.

(9) Clean the lens on the mount side.

Special tool are needed to clean whole prism. Contact Right if the whole prism should be cleaned.

(10) After completion of cleaning, reassemble the parts in the reverse order.

--Pupil distance Torque Adjustment--

(11) Rotate the right and left prism boxes to change the PD.

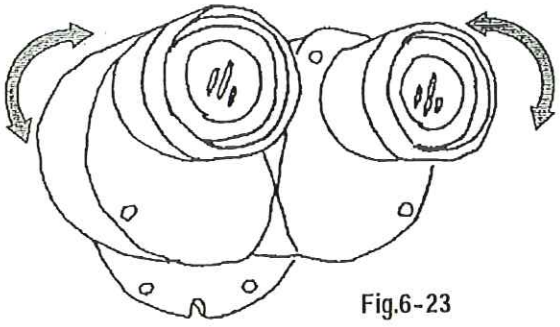

Fig.6-23

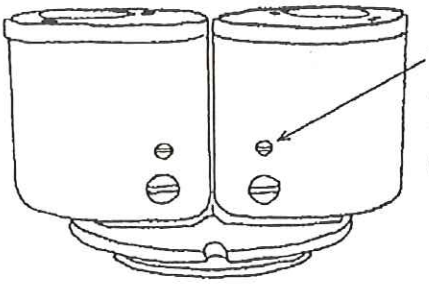

Cannot open.

Fig.6-24

(12) Make the prism box rotating torques almost equivalent with the torque adjusting screws.

(13) After completion of adjustment, make sure that the PD is not changed by the weight of the prisms or when the eyepiece diopter adjusting ring are rotated.

6-3-2 Disassembly and cleaning of zoom power varying unit

--Disassembly--

(1) Rotate and remove the zoom levers.

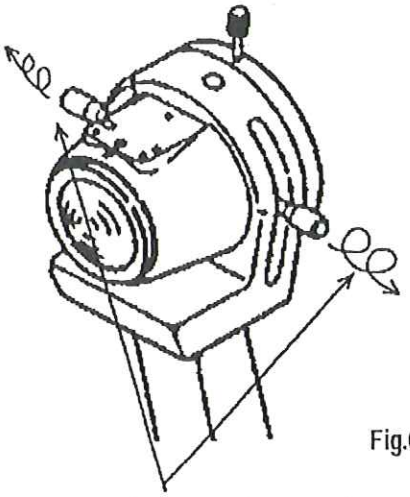

Fig.6-25

Rotate and remove the zoom levers. It is necessary to use grip rubber, etc. to remove the zoom levers, which have screw locks.

(2) Remove the zoom click case.
Rotate and remove the click case with a flat head screwdriver.

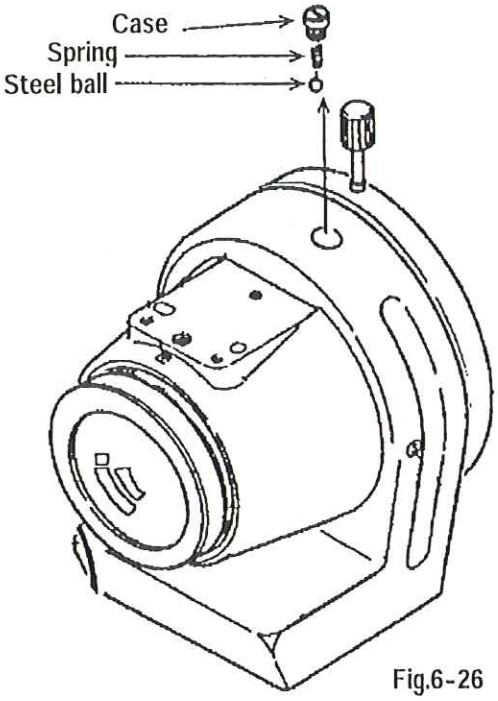

Fig.6-26

(3) Remove three hexagon dead screws and one cross head screw. The mount appears.

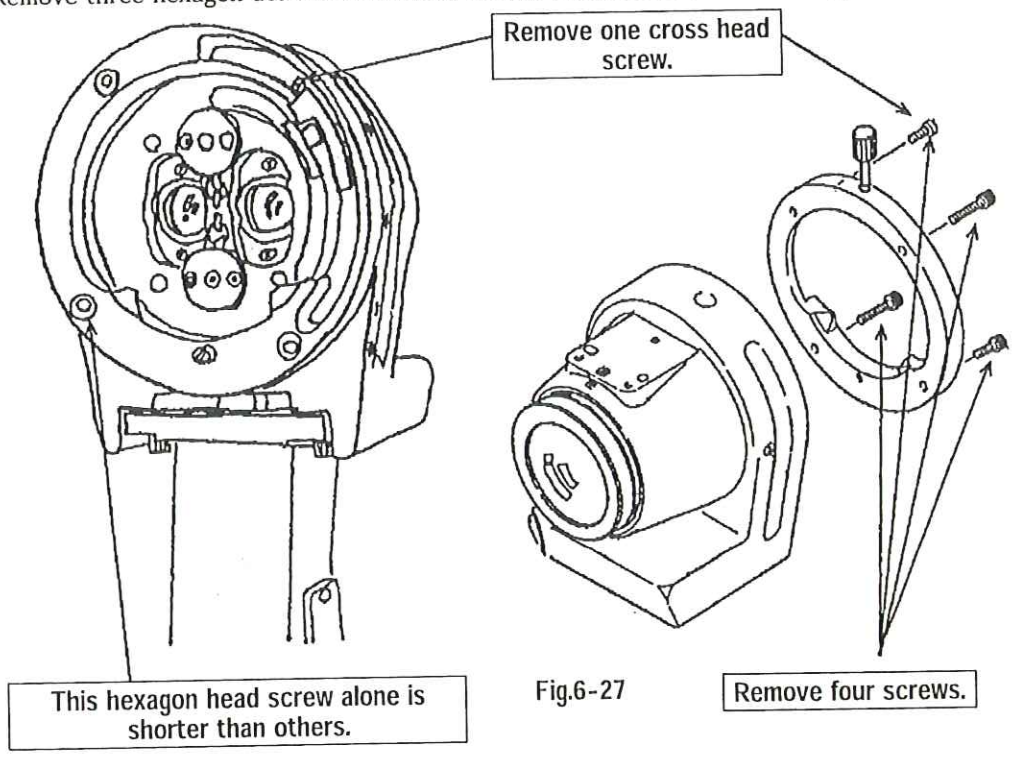

Fig.6-27

(4) Remove four screws. The zoom power varying assembly is dismounted.

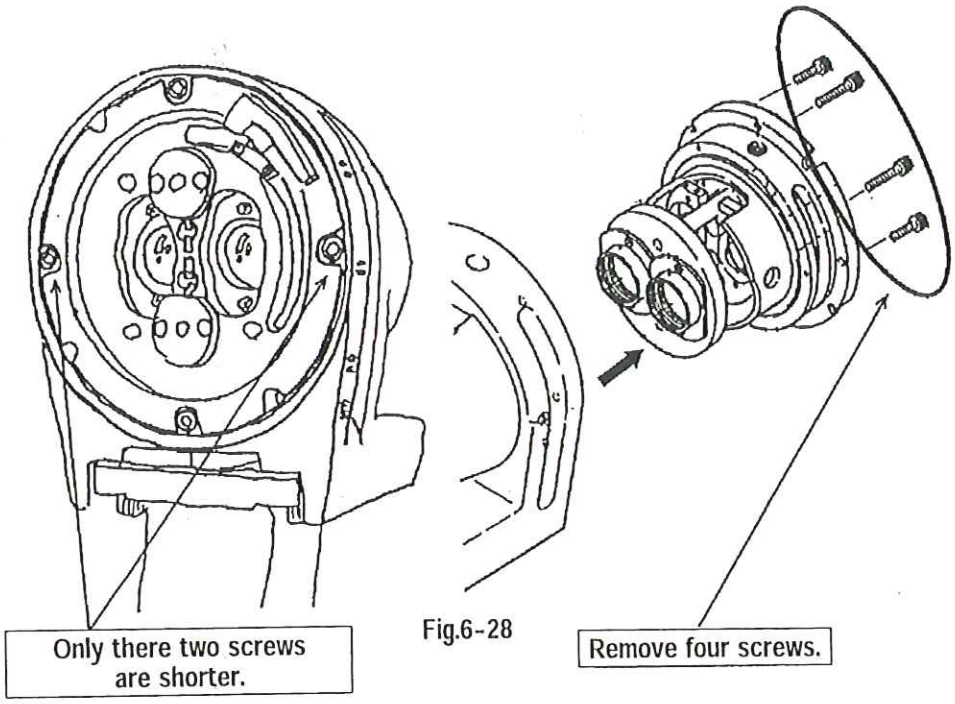

Fig.6-28

6-3 Disassembly and Reassembly of Microscope Unit and Cleaning of Optical System

--Cleaning of Optical System--

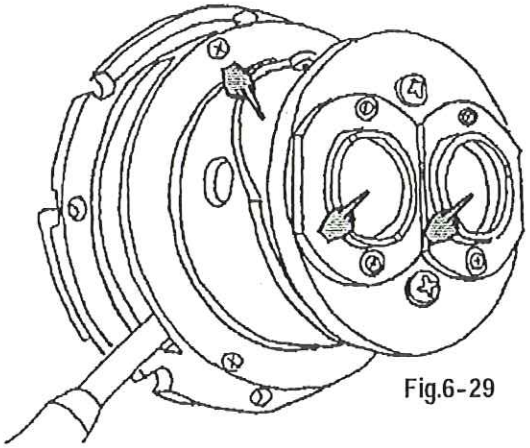

Fig.6-29

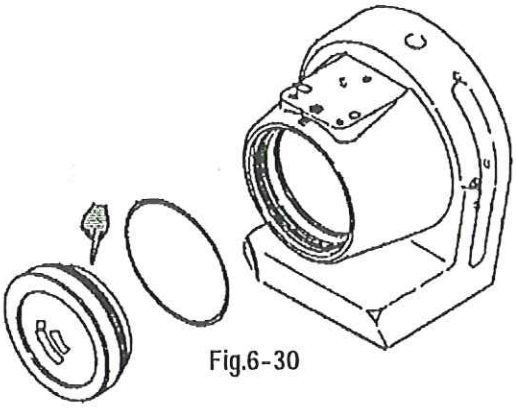

Fig.6-30

Clean the optical system through the gap without disassembling the zoom power varying assembly. Attach the zoom lever and move the zooming optical system to clean the portions which are hard to clean.

Detach the objective lens and clean the it. Be careful not to lose the adjusting washer.

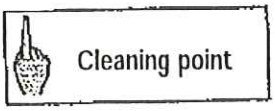

Note: Do not disassemble the zoom power varying unit. Contact Right if it should be disassembled.

--Reassembly of Zoom Unit--

Reassemble the parts in the reverse order. Pay attention to the length of the set screws.

6-4 Inspection and Adjustment of Slit Lighting Unit

6-4-1 Disassembly and cleaning of slit lighting unit (Dust, stain and mold)

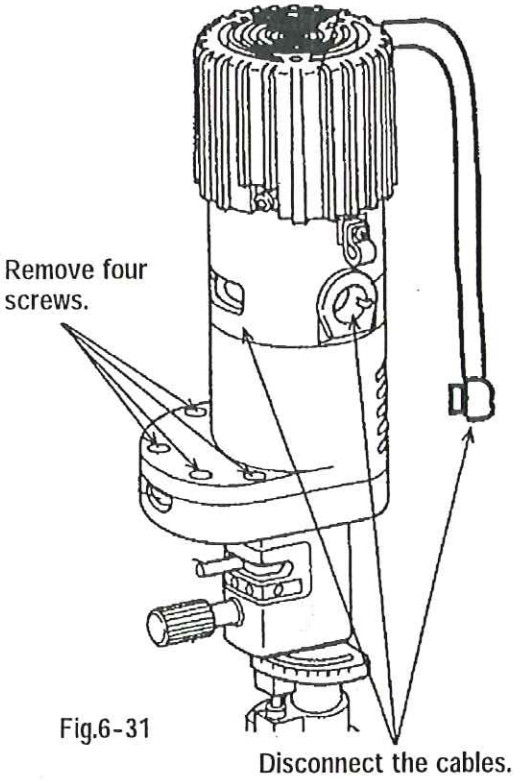

Fig.6-31

(1) Disconnect the lighting, flash tube and external eye lighting cables from the lamp house.

(2) Remove four slit chamber set screws.

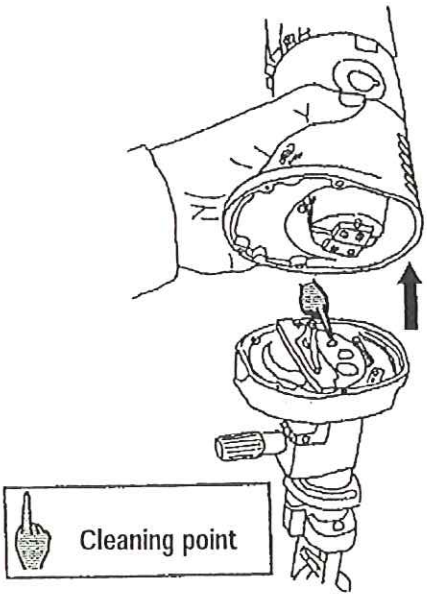

Fig.6-32

(3) Move up the slit chamber slowly.
The diaphragm disk, filter disk, etc. are seen.
If they are dirty, turn the disks and clean through gaps.

Note: Use alcohol only to clean the optical system. If acetone or other strong solvent is used, the filters may be discolored.

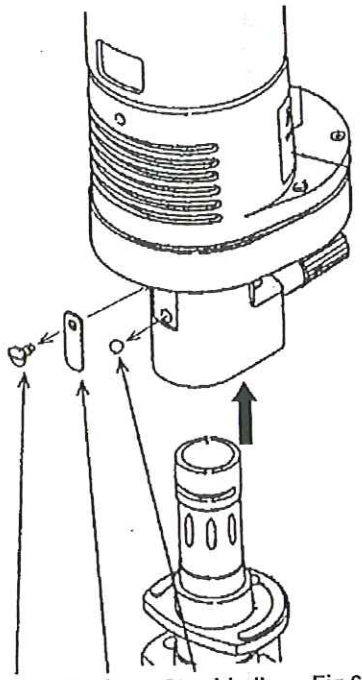

Fig.6-33

(4) Remove the screw, spring and steel ball in this order.

(5) Move up the slit chamber to remove it.

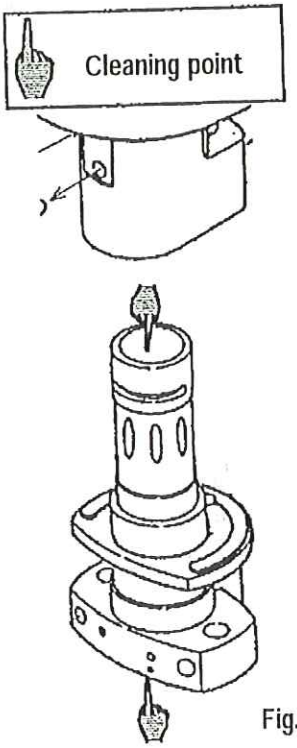

Fig.6-34

(6) Clean the lens in the tube.

(7) If it is necessary to adjust and clean the slit blades, advance to 6-4-2 "Adjustment and cleaning of slit blades".

If it is not necessary to adjust and clean the slit blades, follow the instructions shown below.

a) Reassemble the parts in the reverse order.
b) Then, advance to 6-4-3 "Adjustment of slit opening/closing mechanism".

6-4-2 Adjustment and cleaning of slit blades

--Cleaning of Slit Blades--

(1) Disconnect the cables.

(2) Remove four screws. Lift the upper assembly slowly.

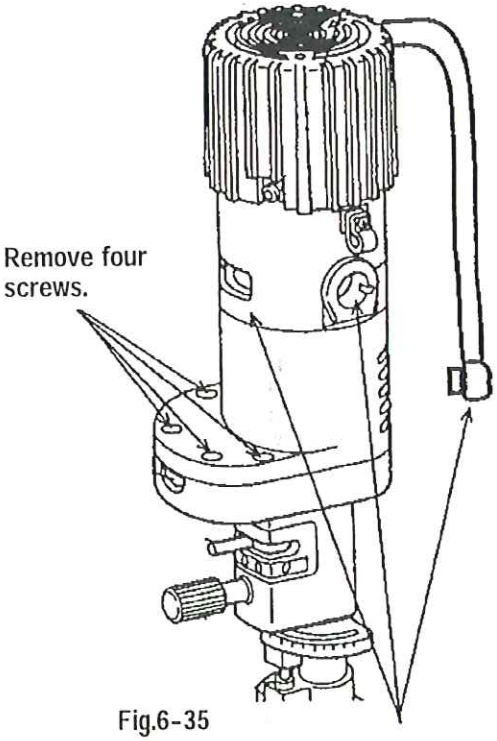

Fig.6-35

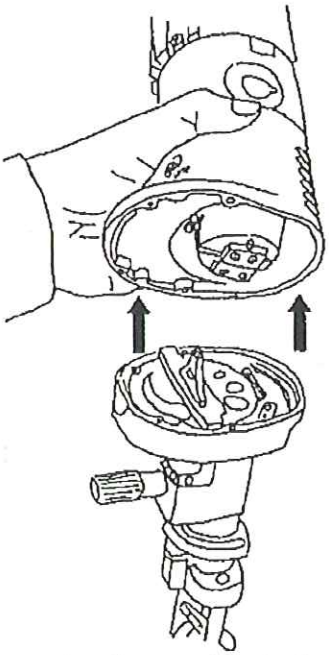

Fig.6-36

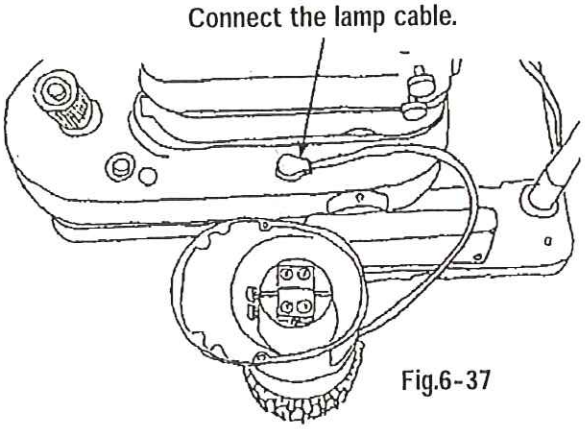

Fig.6-37

(3) Face the slit blades upward, and plug the lighting unit connector into the connector on the slide base.

(4)Turn on the lamp. Minimize the light intensity.

(5)Clean the slit blades and adjust the wedge.

--Cleaning of Slit Blades--

Turn on the lamp. Open the right and left slit blades slowly by hand. Be careful not to damage the slit blades. Damaging the slit blades causes leak of light.

After completion of cleaning, Close the blades and check for a wedge. If no wedge is found, advance to 6-4-3 "Adjustment of slit opening/closing mechanism".

--Adjustment of Wedge--

(a) If slit wedge adjustment is needed, loosen two screws of the right or left blade and adjust inclination of the blade. Never loosen the screws of both blades to adjust inclination.
(b) After completion of adjustment, unplug the connecter and attach the slit chamber temporarily
(c) Attach the target rod. Adjust the power to 16x.
(d) Set the light field diaphragm to 14mm. Move the slit opening/closing knob to open and close the slit repeatedly to check for a "wedge".
(e) If re-adjustment is needed, dismount the slit chamber and re-adjust the slit blades again. After completion of adjustment, advance to 6-4-3 "Adjustment of slit opening/closing mechanism".

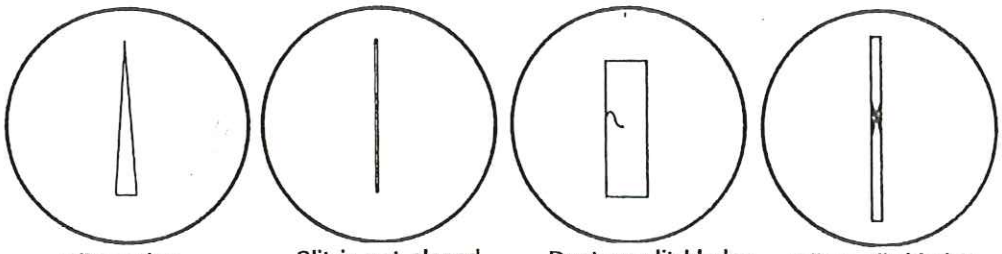

Slit wedge (1) Slit is not closed (2) Dust on slit blades (3) Oil on slit blades (4)

Fig.6-38

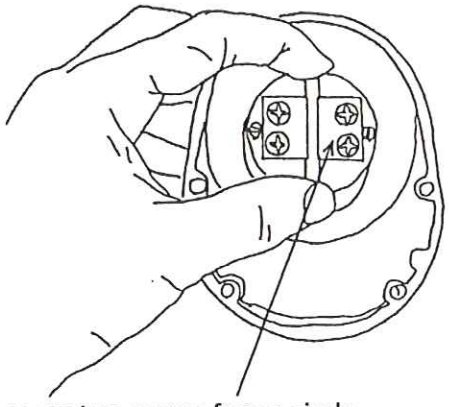

Loosen two screws from a single blade and adjust inclination of the blade.

Fig.6-39

6-4-3 Adjustment of slit opening/closing mechanism

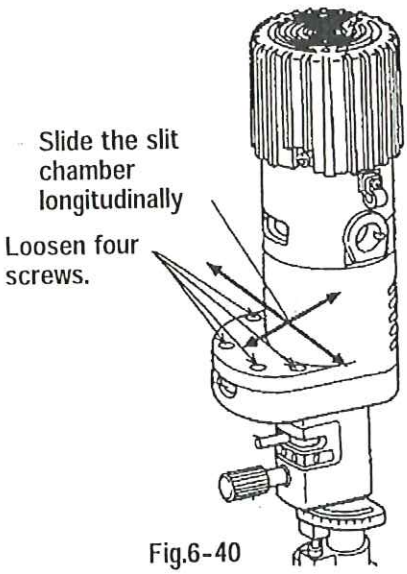

Fig.6-40

(1)Adjust the slit blade center with respect to the light field diaphragm and opening and closing motion.

(a)Attach the target rod. Adjust the power to 16x.
(b)Loosen four slit chamber set screws.
(c)set the light field diaphragm to 1mm.
Slide the slit chamber to the right and left to adjust the slit blades to the center of the diaphragm. After completion of adjustment, set the light field diaphragm to 0.2mm and check if the slit blades meet the standard. (See Fig.6-41.)
(d)Set the light field diaphragm to 14mm.Look at the slit on the target through the microscope. Open and close the slit fully slowly. If the slit is not opened and closed smoothly, slide the slit chamber a little longitudinally to adjust smoothness of opening and closing the slit.

(2)After completion of adjustment, tighten four screws. Check the slit position and movement again.

Fig.6-41

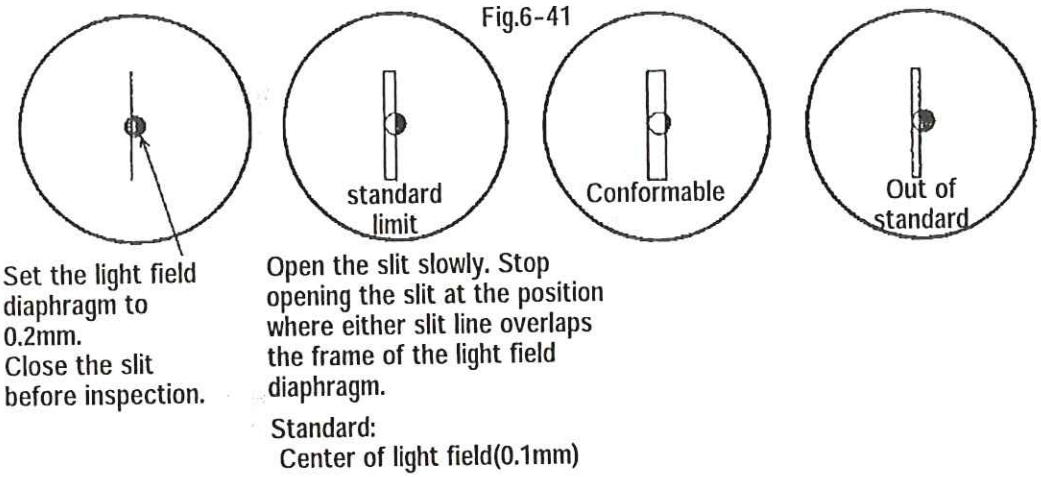

(3)Advance to the following step if the slit position and movement are proper.

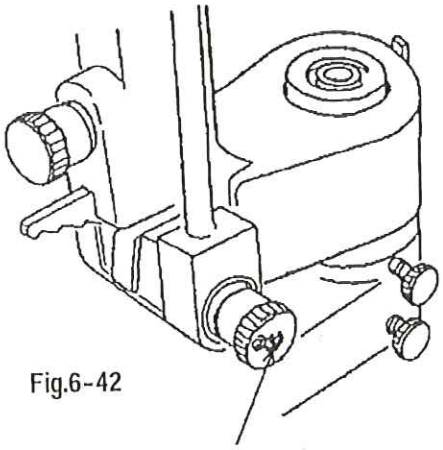

Fig.6-42

--Adjustment of Slit Opening and Closing Action--

(1)Attach the target rod.Set the power to 16x.
(2)Set the light field diaphragm to 14mm.Open the slit a little, release the knob,and look at the scale of the slit opening/closing knob.
If the opening/closing knob is rotated by the force of the slit opening/closing mechanism.(Drift)
(3)Rotate the torque adjusting screw to adjust the torque properly.

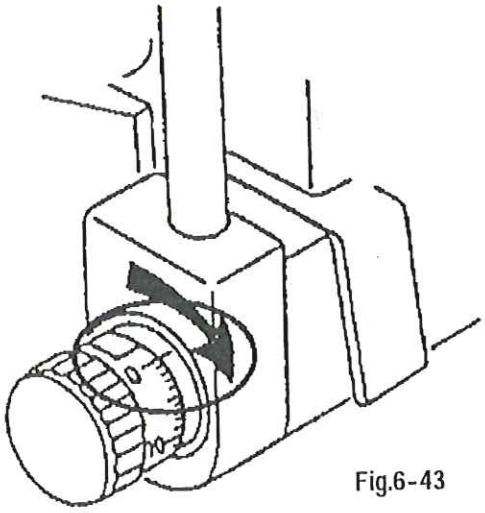

Fig.6-43

--Zero adjustment of Slit Width Scale--
(1)Attach the target rod. Set the power to 16x.
(2)Set the light field diaphragm to 14mm.
(3)Rotate the slit opening/closing knob clockwise to open the slit fully.
(4)Make sure that the slit opens fully.
(5)Look through the microscope,and rotate the slit opening/closing knob slowly clockwise.
(6)When the slit is closed fully,stop rotating the knob.
(7)If the zero position is shifted by one division or more, adjustment is needed.

Rotate the slit opening/closing link rod(show in Fig.6-44) to adjust the slit so that it is closed at the "0" division.

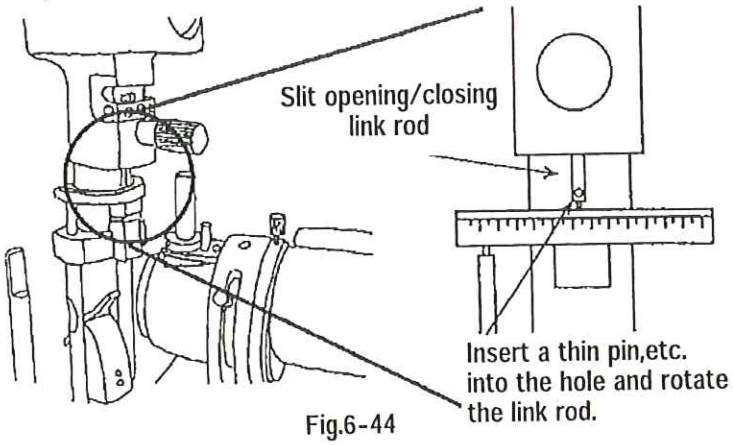

Fig.6-44

6-5 Total Adjustment

6-5-1 Focus and direction adjustment of microscope unit

---Focus Adjustment---

(1)Attach the target tool(J-40010). Adjust the center of the rotation axis.(See 6-2-1 on page 19.)

(2)Open the slit fully,adjust the radiation angle to 30 degrees,and maximize the power. Maximize the light intensity of the slit lighting.

(3)Apply the diopter telescope to the right eyepiece. Rotate the diopter adjusting ring of the eyepiece tool to bring the target into the best focus.Read the value of the diopter adjusting ring.

Standard:Between -1.5dp.and +1.5dp.

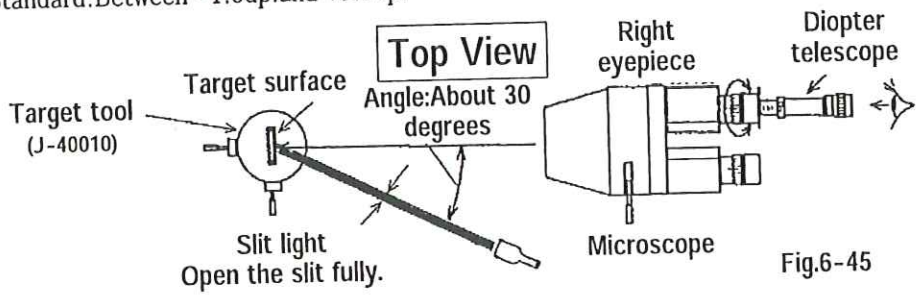

Fig.6-45

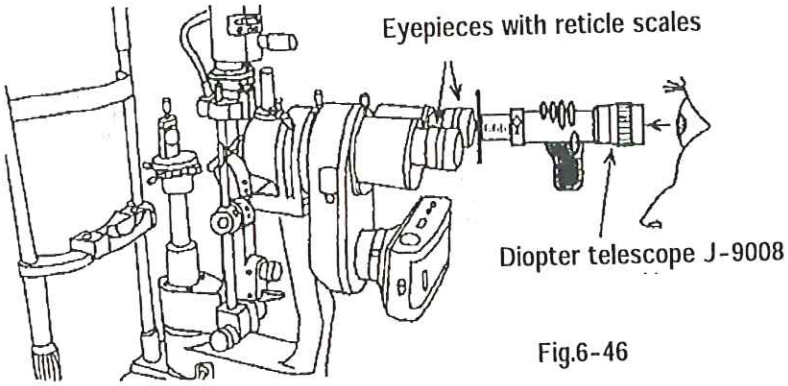

Fig.6-46

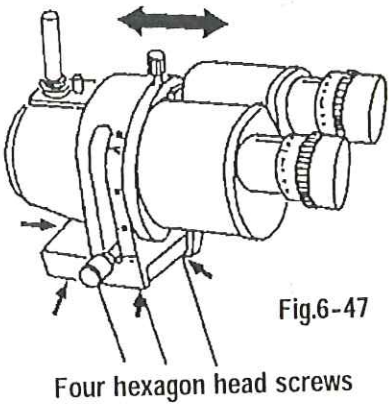

Fig.6-47

(4)If the microscope focus meets the standard, advance to "Direction Adjustment"below.

If the microscope focus does not meet the standard, loosen four microscope set screws,move the whole microscope longitudinally,and adjustment,tighten four set screws temporarily.
Tighten the set screws after direction adjustment.
(Next Page)

---Direction Adjustment---

(5)Attach the target tool.Adjust(or check) the center of the swing shaft. See page 19 in 6-2-1.

(6)Set the eyepiece tool(J-40001).Maximize the power(32x),and make the slit thin and vertical.

(7)Observe the slit with each eye to measure the slit position. The slit observed with each eye should be within 2.5 divisions from the center.(Microscope direction inspection)

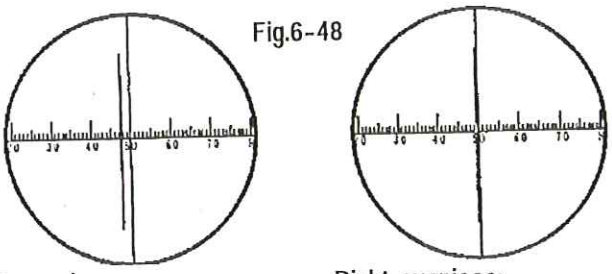

Fig.6-48

Left eyepiece:
2.5 divisions,which are the limit

Right eyepiece:
0.5 divisions,which are the limit

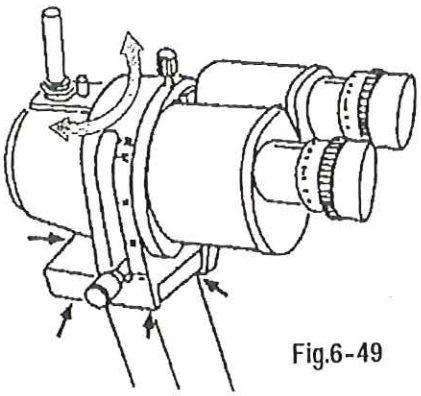

Fig.6-49

*If the direction meets the standard:
Tighten four set screw completely.
Advance to (8).(See Fig.6-49.)

*If the direction does not meet the standard:
Loosen three of four microscope set screw completely. Then,loosen the remaining screw slightly,and adjust the direction of the whole microscope to the right or left slightly After completion of adjustment,tighten four set screws temporarily,then advance to (8).(See Fig.6-49.)

(8)After completion of adjustment,recheck if the focus of the microscope meets the standard in the procedure shown in (1). Repeat adjustment until both the focus and direction of the microscope meet the standards.

6-5-2 Focus and up/down direction adjustment of slit image

---Inspection of Slit Image·Focus---

(1)Attach the target tool.

(2)Set the power to the maximum(32x),and make the slit vertical.Bring the slit into the best focus with the target longitudinal adjusting knob.

(3)Swing the lighting unit to the right and left by 45 degrees each,and check if the movement of the slit is within 5 divisions.

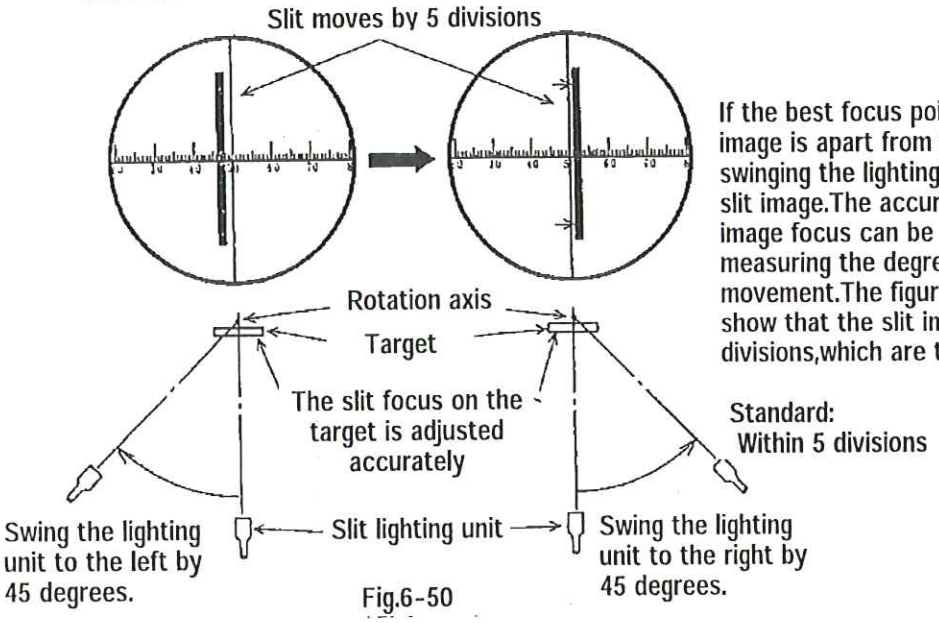

If the best focus point of the slit image is apart from the rotation axis, swinging the lighting unit moves the slit image.The accuracy of the slit image focus can be checked by measuring the degree of this movement.The figures on the left show that the slit image moves by 5 divisions,which are the limit.

Standard:
Within 5 divisions

Fig.6-50

(4)If the slit image focus meets the standard:
Advance to "Adjustment of Slit Image Vertical Position" below.
If the slit image focus does not meet the standard:
Apply alcohol to the focus adjusting lens frame to melt the screw lock.Rotate lens frame to adjust the focus. When the focus is adjusted properly,apply screw lock.Adjustment is completed.
Advance to the following step.

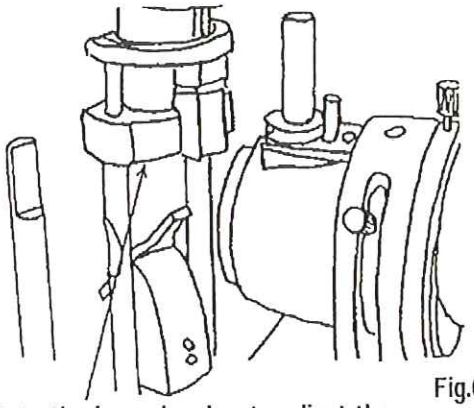

Fig.6-51

Rotate the lens chamber to adjust the

--Adjustment of Slit Image Vertical Position--

Fig6-52

(1)Stand the target tool.

(2)Make the slit horizontal.

(3)Rotate the tool eyepiece by 90 degrees. Make the reticle scale vertical.

(4)The slit center should be located within 2.5 vertical divisions from the eyepiece center.

Standard vertical misalignment of slit: Within 2.5 divisions
(Fig.6-52 show that the slit is misaligned upward by 2.5 divisions, which are the limit.)

(5)If the vertical position meets the standard:
Advance to 2-1 "Delivery Inspection".
If the vertical position does not meet the standard:
Adjust the tightening of the hexagon head screw on the mirror base to adjust the position.

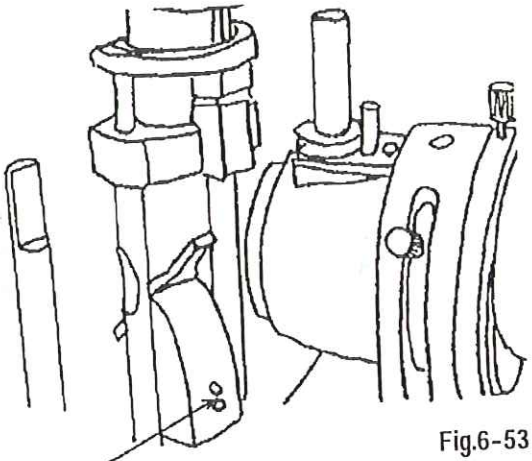

Fig.6-53

The vertical position of the slit can be adjusted by controlling the degree of tightening of the upper or lower hexagon head screw.

(6)Advance to 2-1 "Delivery Inspection". All repair works of the RS-1000 are now completed.

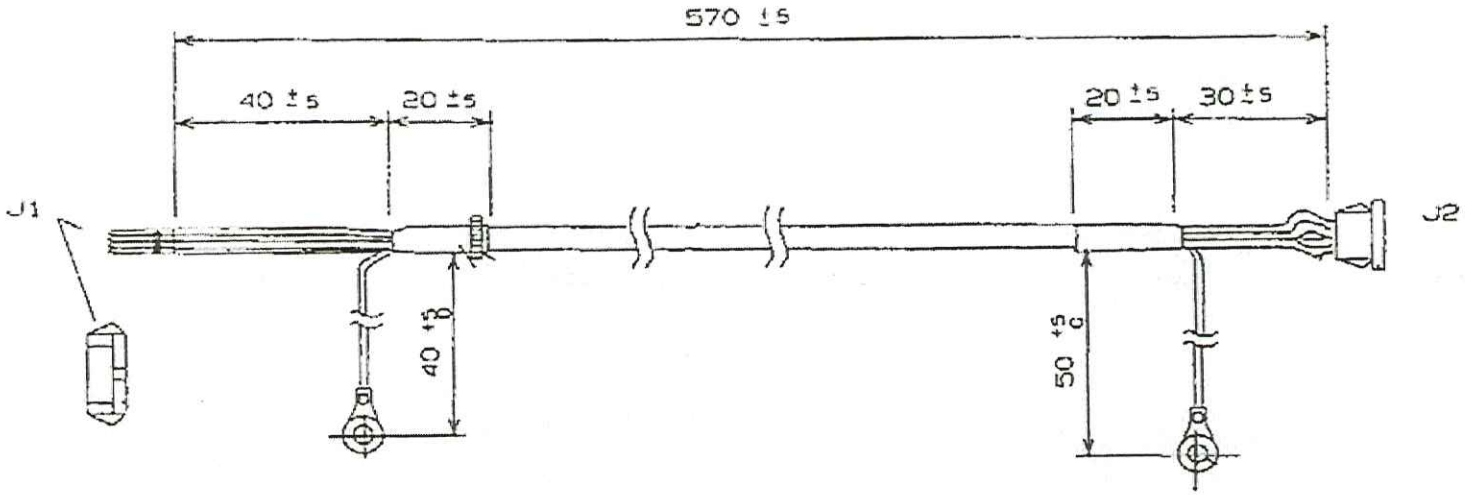

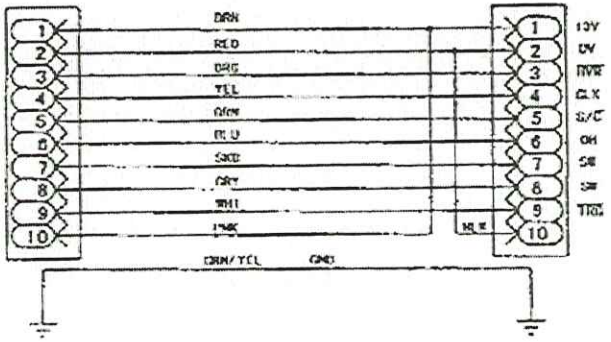

株式会社ライト製作所	Right Mfg. Co., Ltd	名称	写真装置通信コード
この回路図は修理の目的のためのみに使用してください。保存、管理については十分注意され、他の目的のためにコピー、配布を行わない様、お願いします。	This circuit diagram disclosed for repair purposes only. Do not duplicate and distribute for other purposes taking special care for the strage.	NAME	CAMERA INTERFACE CABLE
		RS−1000	

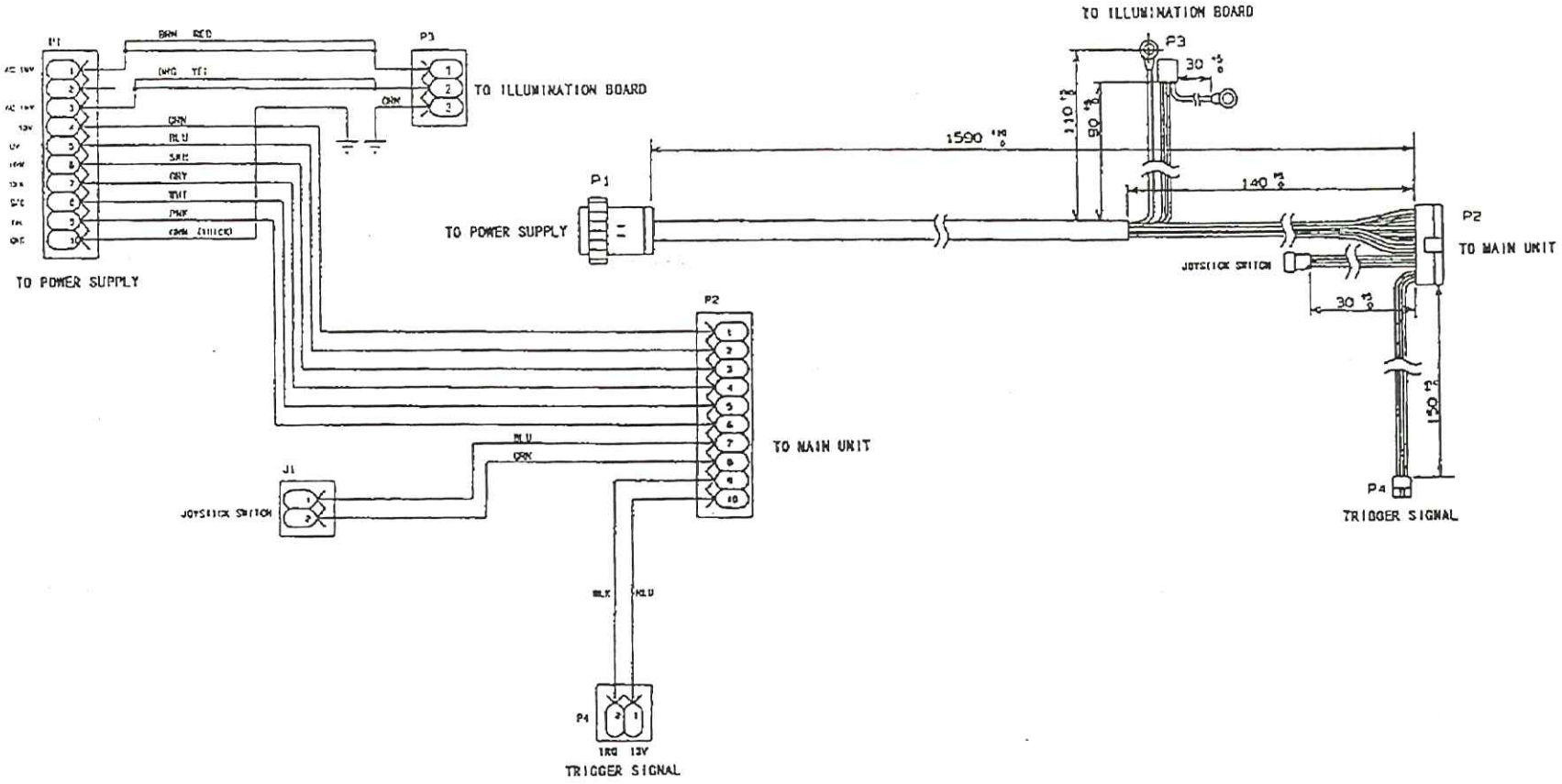

株式会社ライト製作所	Right Mfg.Co. ,Ltb	名称	通信コード
この回路図は修理の目的のためのみに使用してください。保存、管理については十分注意され、他の目的のためにコピー、配布を行わない様、お願いします。	This circuit diagram disclosed for repair purposes only. Do not duplicate and distribute for other purposes taking special care for the strage.	NAME	INTERFACE CABLE
		RS−1000	

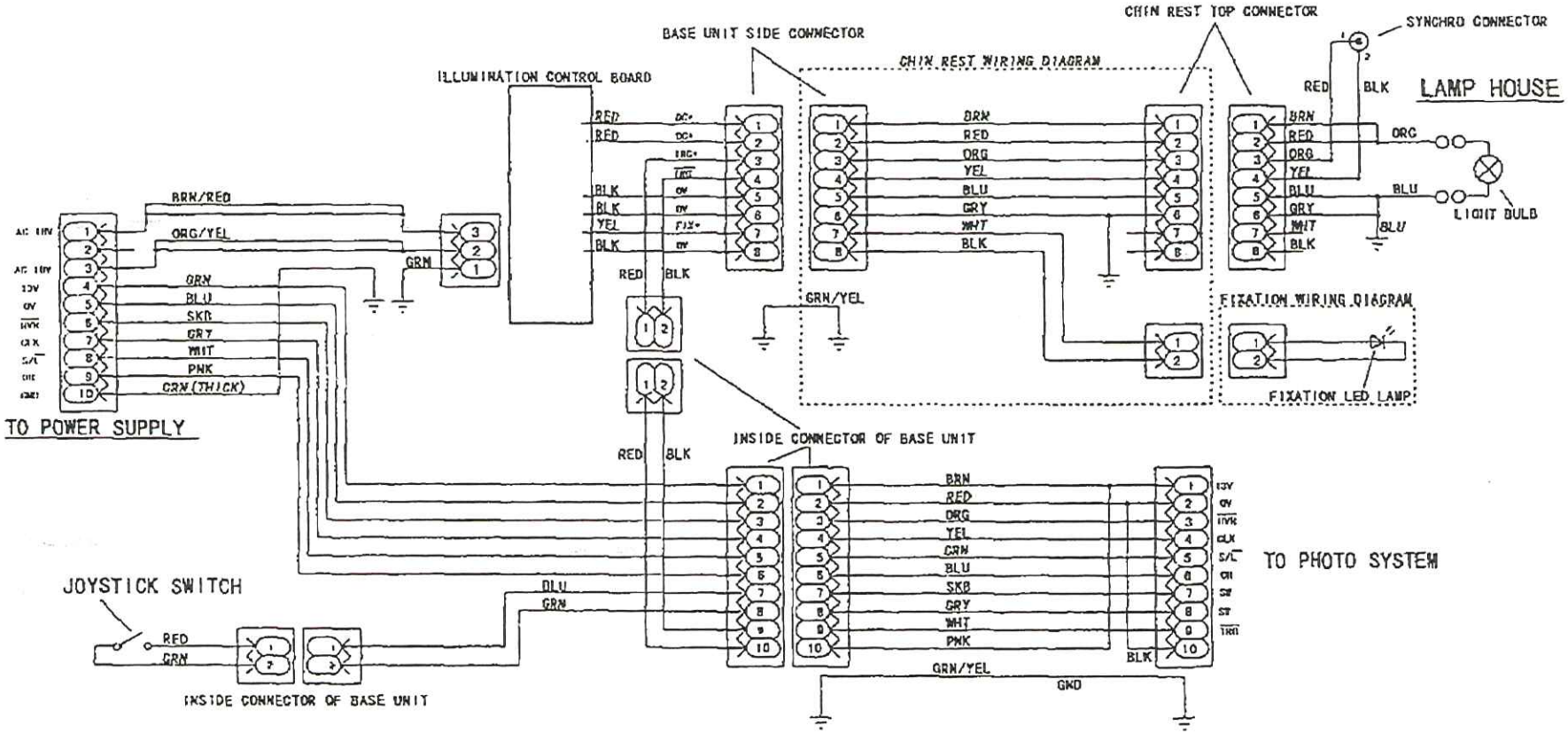

株式会社ライト製作所	Right MFG. CO	名称	本機総合配線図
この回路図は修理の目的のためのみに使用してください。保存、管理については十分注意され、他の目的の為にコピー、配布を行わない様、お願いします。	This circuit diagram disclosed for repair purposes only, Do not duplicate and distribute for other purposes taking special care for the strage.	NAME	Wiring Diagram
		RS−1000 Main Unit	

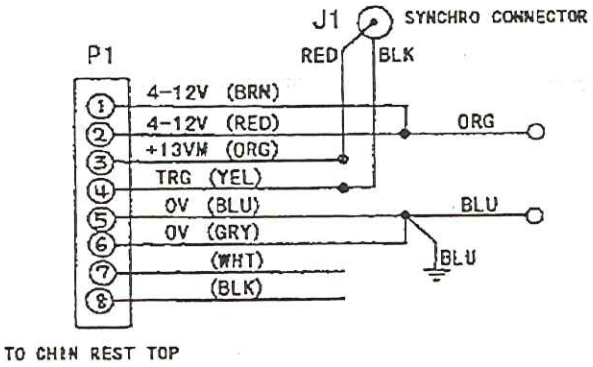

LAMP HOUSE CABLE

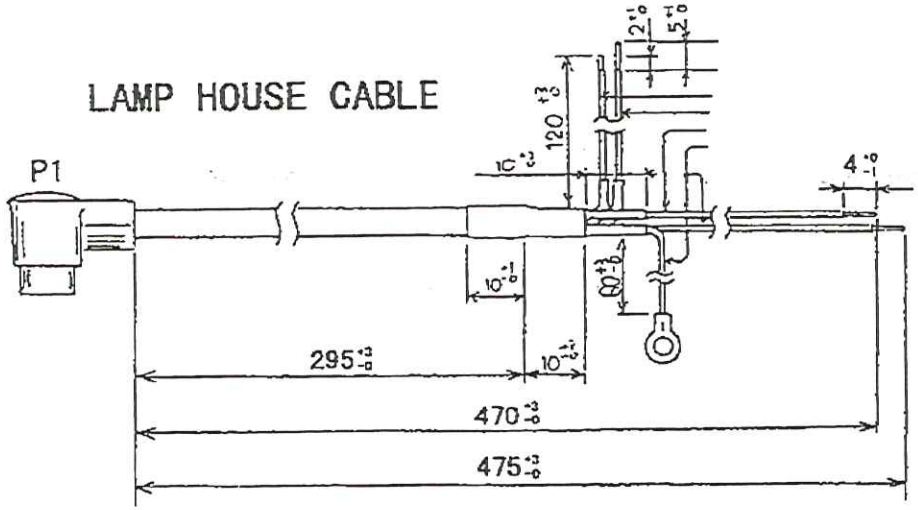

株式会社ライト製作所	Right Mfg. Co., Ltd.	名称	ランプ部配線図
この回路図は修理の目的のためのみに使用してください。保存、管理については十分注意され、他の目的の為にコピー、配布を行わない様、お願いします。	This circuit diagram disclosed for repair purposes only, Do not duplicate and distribute for other purposes taking special care for the strage.	NAME	LAMP HOUSE CABLE
		RS－1000	