RED ROVER INC.

Tender Submission

TENDER EVALUATION: CURTIN'S THE AVENGINEERS

CLIENT: EMPACT

Project: Mars Lander

19/04/2017

EXECUTIVE SUMMARY

This tender response has been prepared by Red Rover Inc. and is responding to the tender evaluation criteria set out by Curtin's the Avengineers. The purpose of this response is to prove to Curtin's the Avengineers that Red Rover Inc. are experienced and well equipped to take on the task of constructing the design and the Red Rover Inc. are very understanding of the design and how the rover is to be constructed.

Red Rover Inc. believe that we stand out from other contracting teams because of our plethora of experience in making wooden models and structures. We also have all the necessary tools and safety equipment to undertake the construction with minimal time and effort but with the maximum amount of safety and consistency. Red Rover Inc. have provided evidence that we have not only the appropriate tools and equipment but also the correct environment to undertake construction and to uphold safety requirements.

Also, Red Rover Inc. has easy access to both general stores as well as hardware stores all located less than a 15 minute drive away from each team member. This means that construction can start almost immediately after our tender is accepted as sourcing the materials will be easy and quick. Red Rover Inc. also has access to many materials already which means cutting down on cost and time spent looking for materials which means a smaller budget and finishing construction well before the deadline specified.

In addition to this, Red Rover Inc. believe that the all the tender evaluation criteria provided by Curtin's the Avengineers have been responded to thoughtfully and concisely so that Curtin's the Avengineers can see that Red Rover Inc. is a company that is keen and can handle the construction. Red Rover Inc. have answered all the criteria in a positive and constructive way revealing all the necessary information and have achieved, what we believe to be, a relatively high score when assessed on the criteria. This shows our commitment and capability in handing a project like this and proves to both Curtin's the Avengineers and EMPACT that Red Rover Inc. are fully capable in handling construction precisely and efficiently.

Furthermore, Red Rover Inc. are willing to be liable for any damage to the rover that is sustained during construction and/or testing and, if damage is significant enough to impact the overall structural stability of the rover, are willing to replace these parts. This shows a commitment to the success of the Mars rover in ensuring that the rover is in suitable condition to be tested and to be successful and satisfy the client's needs.

Red Rover Inc. are confident in not only their ability but there experience, accessibility to tools and their reliability so that the rover designed by Curtin's the Avengineers will be completed on time and to the highest possible standard.

Contents

1.0 INTRODUCTION 3
2.0 DESIGN PACKAGE REVIEW 3
2.1 Understanding of Design 3
2.2 Client Brief Compliance 3
2.3 Concerns and Solutions 3
3.0 CRITERIA 4
3.1 Experience and Qualifications 4
3.2 Access to Equipment 5
3.3 Accessibility 6
3.4 Liability and Other Considerations 7
4.0 Appendix A.1 8
5.0 Appendix B.1 9
6.0 Appendix B.2 10
7.0 Appendix B.3 10
8.0 Appendix C.1 11
9.0 Curtin's the Avengineers' Design Package 12

1.0 INTRODUCTION

This document provides Red Rover Inc's response to the evaluation criteria outlined in the design package provided by Curtin's the Avengineers. This submission refers to the design and construction of a model Mars Rover designed to carry a water bottle on behalf of Clive Maynard, the client.

2.0 DESIGN PACKAGE REVIEW

Red Rover Inc. have reviewed the design package to ensure we have a complete understanding of the project and how the design works.

2.1 Understanding of Design

The design is a basic one at heart yet incorporates some elements that allow it to be relatively inexpensive and easy to construct. The use of a "stubby holder" to secure the water bottle which has a larger diameter than the holder means the elasticity in the holder will secure the bottle to the lander without need for any complex assembly. Using cans as wheels is a creative yet cheap and effective way to allow the lander to roll down the slope and not sustain damage after the one metre fall.

2.2 Client Brief Compliance

As stated in the client brief the size of the rover must not exceed the size of an A3 piece of paper with a maximum height of 210mm. The design provided has a length exceeding the 420mm allowed and this was clarified with Curtin's the Avengineers and a fix was implemented. The width and height were both within the constraints found within the Client Brief. The Brief also states that the rover should free roll down a slope which if made to the design it should also satisfy this criterion. The overall cost of the design comes in at $27.17 as stated in the Design Package (attached at page 12) which is under the $30 maximum with a small amount of room to move.

2.3 Concerns and Solutions

One of the primary concerns about the design was the placement of the water bottle in relation to the weight distribution on the Rover. A solution to this issue would be to have the bottle placed as close to the rear as possible to reduce the chance of the Rover flipping on its back and thus not satisfying the Client Brief. Another concern was the availability of straws with a diameter of 7mm which were specified in the Bill of Materials yet weren't available from Coles as was stated. This concern was raised with Curtin's the Avengineers and it was discovered that these straws would have to be purchased from IKEA. The final improvement was the use of two bases of cans instead of the top and bottom to improve the overall strength of wheels and to reduce the chance of the wheels failing upon landing.

3.0 CRITERIA

Red Rover Inc's response to the criteria provided by Curtin's the Avengineers can be found in normal text following the italicized criteria.

3.1 Experience and Qualifications

Do any of your team members have any professionally recognized skills and/or qualifications which may be relevant to the construction of a small model consisting of wood, metal, and plastic? E.g. Cert 2 in Woodwork

Unfortunately, none of our team has professionally recognized skills but we all have experience in high school from years 8 to 10 in woodwork and metalwork using a large array of machines and tools. These include band saws, drill presses, circular saws and other small tools such as power drills, hand saws and hammers. We have all constructed multiple different structures for classes from various years and various skill levels. Refer to Appendix A.1 for photos of some of the constructed pieces by Red Rover Inc Contractors.

Do any of your team members have prior experience in interpreting technical drawings and/or reading step-by-step procedures, even in a non-professional scenario?

In a professional scenario, none of our team have experience yet it non-professional scenarios all members have some experience from high school and in other environments. This includes, but is not limited to, university laboratory sessions, high school woodwork/metalwork and casual work around the house. Once again please refer to Appendix A.1

Do any of your team members have prior experience safely operating machinery such as Drop Saws, Drill Presses, Ban Saws, Hand Drills and/or other power tools?

All our team have some experience in the operation of heavy equipment including band saws, drill presses and electric sanders. During high school, it was often reiterated that safety was very important thus we had to wear appropriate safety wear when we were carrying out tasks using heavy machinery. The whole team is used to wearing gear like closed in shoes, safety glasses and protective clothing to reduce the risk of serious injury and harm to the body as recommended in the Risk Assessment available in the Design Package starting on page 12.

Do any of your team members have prior experience in manual processing of wood and or/plastic? E.g. the use of sandpaper, wood/plastic/super glue, hand saws and/or production of wooden/plastic models?

All our team members are proficient in the use of sandpaper, glues and have experience in the use of both manual and electric tools. The team is very experienced in the processing of wood and has constructed many different items from a small scale up to products much larger. Overall, we have a somewhat limited experience in the use and production of plastic and plastic models yet due to our strong background with wood we are certain that won't hinder our ability to make the design come to life.

3.2 Access to Equipment

Do any of your team members have access to power tools within their homes which they are able to use including the following: Drill Presses, Ban Saws, Hand Drills, Hand Saws, fractional drill bits (~6.5mm) etc.?

Combined our team has access to many manual and electric tools at our homes which we are able to use including;

Metal and wood hand saws,

Electric drills, hammer drills and drill bits of necessary sizing,

A jigsaw,

A circular saw,

Screwdrivers,

Hammers,

Hot glue gun,

Scissors.

Note: if the drill bits we have are not the exact required size and it is strongly recommended we use a specific size Red Rover Inc. will be happy purchasing the required size.

Refer to Appendix B.1 for evidence of electric tools available to us.

Do any of your team members have access to manual processing tools within their homes which they are able to use including the following: sandpaper, wood/plastic/super glue, scissors, hand file?

Red Rover Inc. has access to many manual processing tools which they can use which include but are not limited to;

Sandpaper of varying grades,

Wood glue,

Super glue,

Scissors,

Hand files,

Pencils and rulers,

Tape measures,

Engineers square.

Note: Refer to Appendix B.2 for evidence of manual processing tools available to us.

Do any of the above specified members have an accessible area, such as a workshop, in their home where they can safely use the above tools.

All members have the necessary room and safety environment necessary for construction with a bench and safety equipment so Red Rover Inc. can construct the vehicle in a safe and tidy environment. Two members have benches and one has access to a fabrication plant where there are abundant tools and safety wear. Refer to Appendix B.3 for photographs of our possible work environments.

Do any of your team members have access to any of the following recycled materials: 375mL Aluminium Cans, Clear Tape, Stubby Holders, Wooden planks/blocks more than 22cm long and 9cm wide and /or Super Glue.

Red Rover Inc. has access to all of the recycled materials listed above and they are readily available for us to use in construction of the rover. As the aluminium cans required for construction need to be whole and mostly undamaged these may need to be purchased as stated on the Bill of Materials unless it is planned for members to make a conscious effort to keep cans in good condition.

3.3 Accessibility

Do any of your team members have access to a hardware store (e.g. Bunnings Warehouse), less than 10 minutes away by any conventional mode of transport?

All group members live relatively close to a local hardware store with one member a six minute drive from the Bunnings Warehouse in Balcatta. Another team member also lives 6 a six minute drive from their local Bunnings in East Victoria Park. The final member lives just under 15 minutes away from Bunnings in Rockingham.

Do any of your team members have access to a general store (e.g. Coles, Woolworths), less than 10 minutes away by any conventional mode of transport?

Once again, all team members are conveniently located relatively close to a local general store with one member just a two minute drive away from Woolworths in Victoria Park. One team member lives just three minutes away from Coles in Warwick Grove and the other member lives eight minutes away from IGA in Rockingham.

Do any of your team members have access to a vehicle, a driver's license, and the ability to freely use this vehicle to travel to the locations listed above? Do any of your team members have daily access to public transport?

All our team members have access to a car and hold a valid driver's license with the ability to drive by themselves. The team can all readily access the above locations and if the need arises are willing to take alternative transport to support the team. This includes walking or taking public transport which all team members have easy access to.

Do any of your team members live within 30 minutes of each other by any conventional mode of transport?

Unfortunately, our team is spread across Perth and some members do not live within 30 minutes of others. We have a member in Burswood, Carine and Rockingham which means that there is almost an hour between two of our members even in good traffic. Please refer to the table in Appendix C.1 for approximate times between the various team members' houses.

3.4 Liability and Other Considerations

Are your team members willing to take responsibility for, and potentially pay for, any damage to materials during the construction or testing process. i.e. if materials were broken/faulty, would you replace them as oppose to attempting to use them in the construction?

Our team is dedicated to constructing the design to match the specifications to the best of our ability and we will take responsibility in making sure all materials are up to standard. If this means we have to replace certain materials we are happy to do this so we can increase the chances of the rover being successful. We strive to take the most care with our tools and our materials to avoid broken and damaged equipment and materials.

Do you consider your team able to complete the construction of the model more than 6 hours before the deadline?

Red Rover Inc. work hard to have all our group and individual assignments ready a day before the due date in case of an emergency and so the team can check over everyone else's work before it is submitted. This is what we also plan to do with construction, complete it at least a day before the deadline, including testing the design in our own environment. Red Rover Inc.'s design package was completed a day before the due date and was submitted at 7:30pm on the night of the due date as the team member submitting had other commitments until 7pm.

Are there any other limitations imposed on your team or team members which would affect the construction process that you would be willing to disclose?

As a team, we believe there is nothing limiting our ability to construct the design specified and no one had any individual limitations.

4.0 Appendix A.1

Photographs of various constructed pieces by Red Rover Inc. contractors. Most of our experience is with wood construction yet a lot of the skills are transferable and we believe we would have no trouble using plastic.

5.0 Appendix B.1

Photographs of some of the main power tools available to Red Rover Inc. including electric drills, jigsaws and a circular saw. All of which are readily available for use.

6.0 Appendix B.2

Photographed are an assortment of manual tools available to Red Rover Inc.

7.0 Appendix B.3

These are two possible work stations available to Red Rover Inc. for construction of the rover.

8.0 Appendix C.1

Table displaying the average time by car to travel between team members suburbs of residence.

	Burswood	**Carine**	**Rockingham**
Burswood	-	24 minutes	43 minutes
Carine	24 minutes	-	55 minutes
Rockingham	43 minutes	55 minutes	-

9.0 Curtin's the Avengineers Design Package

2.0 Client Brief

Problem Statement

Your client, EMPACT, has approached you to design a prototype Mars Lander/Rover, for an upcoming bid to be a part of an international space exploration consortium. You have been approached to provide an innovative solution to the final deployment stage of a rover, and therefore you must design, construct and test a small scaled vehicle that is capable of deployment and withstanding a vertical drop. The client brief is outlined in Sections 2.1 through to 2.3. The client can be contacted through a discussion board on blackboard, though remember that although the client aims to respond to any communication within two (2) working days, this may not always be attainable.

2.1 Design Statement

EMPACT requires a vehicle to be constructed such that it is capable of being tested by rolling down a slope between 3045 degrees for 2 metres, and falling through a vertical drop of 1 metre without sustaining any significant damage. The prototype must conform to constraints given in Section 2.2, and will be evaluated according to the variables given in Section 2.3.

2.2 Design Constraints

The finished prototype must conform to a number of key constraints indicated by the client. These constraints are explained below and the compliance grading is shown in Appendix A.

2.2.1 Conceptual Constraints

The prototype must be designed to travel in a self-guided straight line for 2 metres, down a slope set to not less than 30 degrees. Following this free roll, the prototype will be subject to a vertical drop of 1 metre, and must land and stay on its wheels.

Due to the nature of the project, the final design will be required to carry a lot of heavy equipment. This has been scaled down to require the prototype to carry a weight, in the form of 600ml water bottle. This cargo must be loaded onto the top of the prototype, with no complex assembly required (i.e. closing a box flap is acceptable, screwing a panel is not). The condition of the cargo must be easy to assess without directly accessing the prototype (i.e. visual inspection from ~1m distant).

2.2.2 Dimensional Constraints

The entire footprint of the prototype vehicle must fit within an A3 sheet of paper (420mm x 297mm), with no portion of the assembly overhanging the boundary. The maximum height of any portion of the prototype is 210mm.

There must be at least two axles on the prototype, and the wheels (or tracks) must allow the prototype to move down a slope of 30 degrees minimum.

2.2.3 Materials Constraints

The prototype must be designed to cost less than $30 when pricing materials using the spreadsheet provided on blackboard. 3D printed components are permitted provided that the total 3D cost is less than 25% of the theoretical prototype cost (as determined by the spreadsheet).

Recycled materials may be used in lieu of purchased materials at the construction stage, and this may result in a higher performance level (Appendix A). The actual cost is calculated by considering the cost incurred by the contractors (e.g. if a pack of 4 items is bought for $1, but only one is used, the actual cost is still $1). Recycled materials can be accounted for with a cost equivalent to 50% of the spreadsheet cost.

2.2.4 Impact and Cushioning Constraints

The prototype must be designed such that no manual control is required between the release onto the slope, and the end of testing (after the impact on the floor). The prototype must end testing with at least one set of wheels in contact with the ground, and without damage or spilt cargo.

2.3 Testing for Client Compliance & Performance

The prototype will be tested in Assignment 6, and will be awarded a mark based on the compliance and performance of the vehicle.

Curtin's The Avengineers

EMPACT
Curtin University

Dear Mr. Maynard

Re: Design and Construction of Mars Lander

It is with great pleasure that we present you with our documentation package suitable for the construction of your Mars Lander. This package consists of the following documents:

Document Name	Document Title	Revision
Drawing Package	DRAW_3.pdf	3
Design Specification	SPEC_2.pdf	2
Risk Management Plan	RISK_3.pdf	3
Tender Evaluation Criteria	TEC_4.pdf	4
GANTT Chart	GANTT Chart.pdf	1

We state that all of your requirements, as per your Client Brief.pdf, have been met and that all information required for design, tendering and construction purposes has been included in the documents provided. We also state that this is all our own work.

Regards,

Tashreeq Peck (19130721)

Lev Velazco (19130187)

Luke Day (19168625)

Michael Stone (19125222)

Tony Barbaro-Wright (19182515)

Noah Watts-Bibby (19134710)

Curtin's The Avengineers

Drawings Package

Client: EMPACT

Project: Mars Lander

Date 02/04/2017

Revision: 4

Table of Drawings

Number	Description	Page
DRAW_4-1	Front view	3
DRAW_4-2	Bottom view	4
DRAW_4-3	Side view	5
DRAW_4-4	Top view	6
DRAW_4-5	Exploded view	7

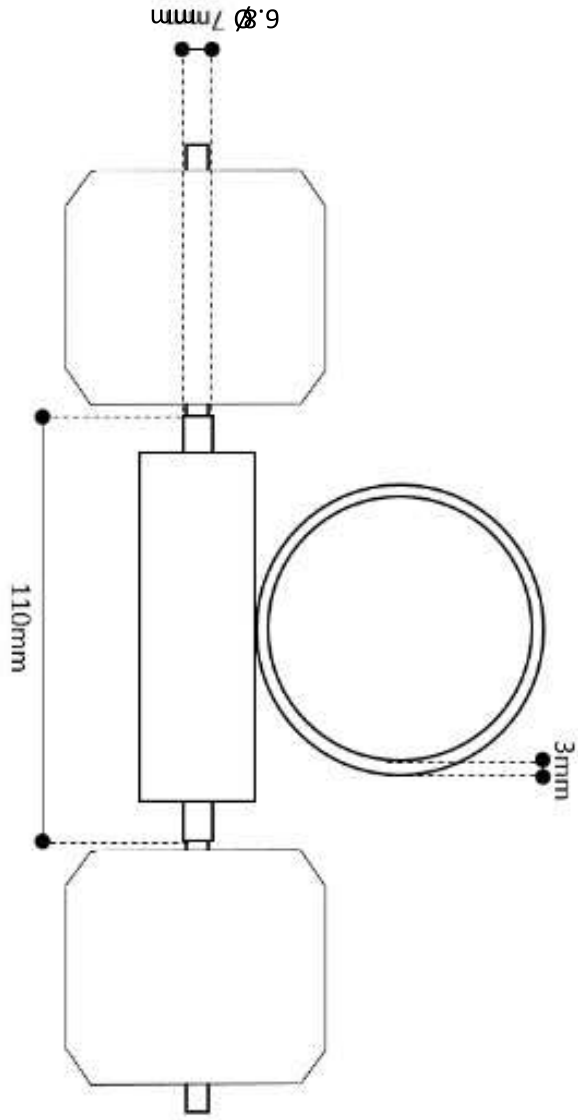

Front view

	Name	**Date**	Do not scale drawing	Revision 4
Drawn	Michael Stone	01/04/17	Curtin's The Avengineers	
Checked	Tashreeq Peck	02/04/17	TITLE: Mars Lander Front View	
Approved	Tashreeq Peck	02/04/17	SCALE: 1:2	Sheet 2 of 5
		DRAWING NO: DRAW_4-1		A4

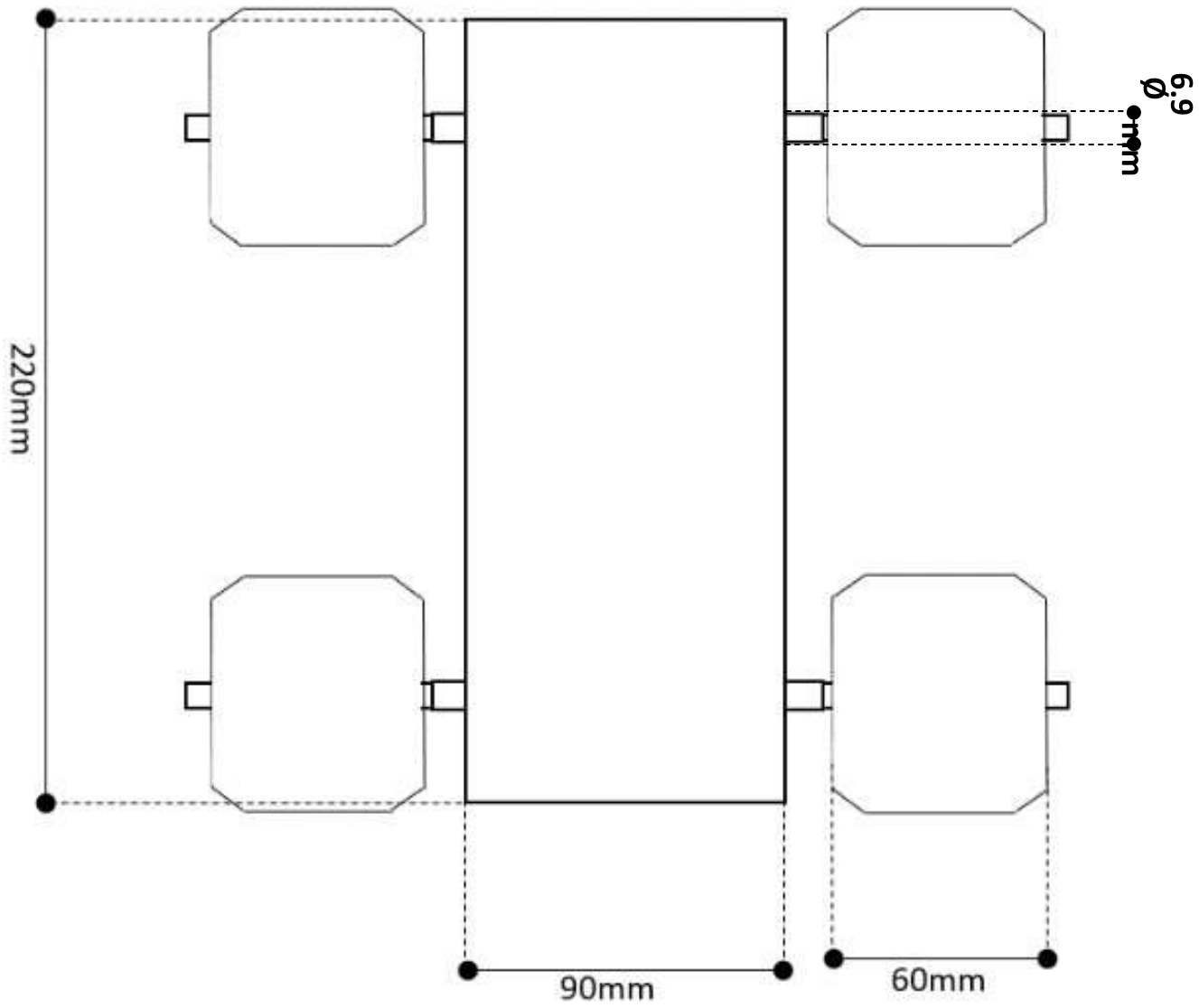

Bottom view

	Name	Date	Do not scale drawing	Revision 4
Drawn	Michael Stone	01/04/17	Curtin's The Avengineers	
Checked	Tashreeq Peck	02/04/17	TITLE: Mars Lander Bottom View	
Approved	Tashreeq Peck	02/04/17	SCALE: 1:2	Sheet 2 of 5
		DRAWING NO: DRAW_4-2		A4

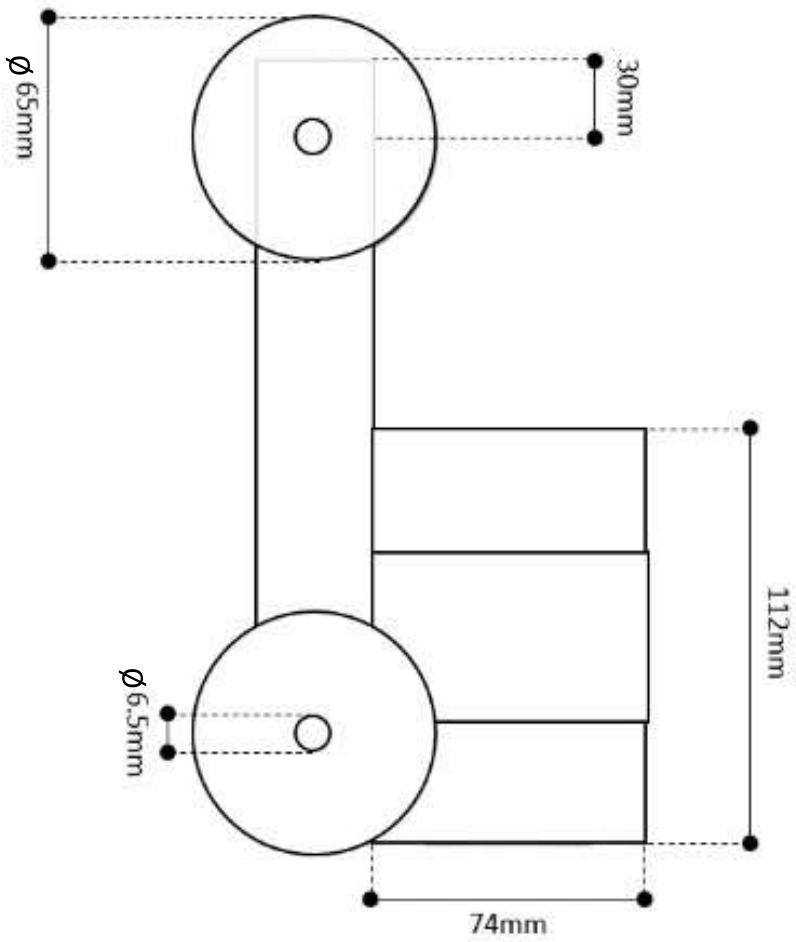

Side view

	Name	**Date**	Do not scale drawing	Revision 4
Drawn	Michael Stone	01/04/17	Curtin's The Avengineers	
Checked	Tashreeq Peck	02/04/17	TITLE: Mars Lander Side View	
Approved	Tashreeq Peck	02/04/17	SCALE: 1:2	Sheet 2 of 5
		DRAWING NO: DRAW_4-3		A4

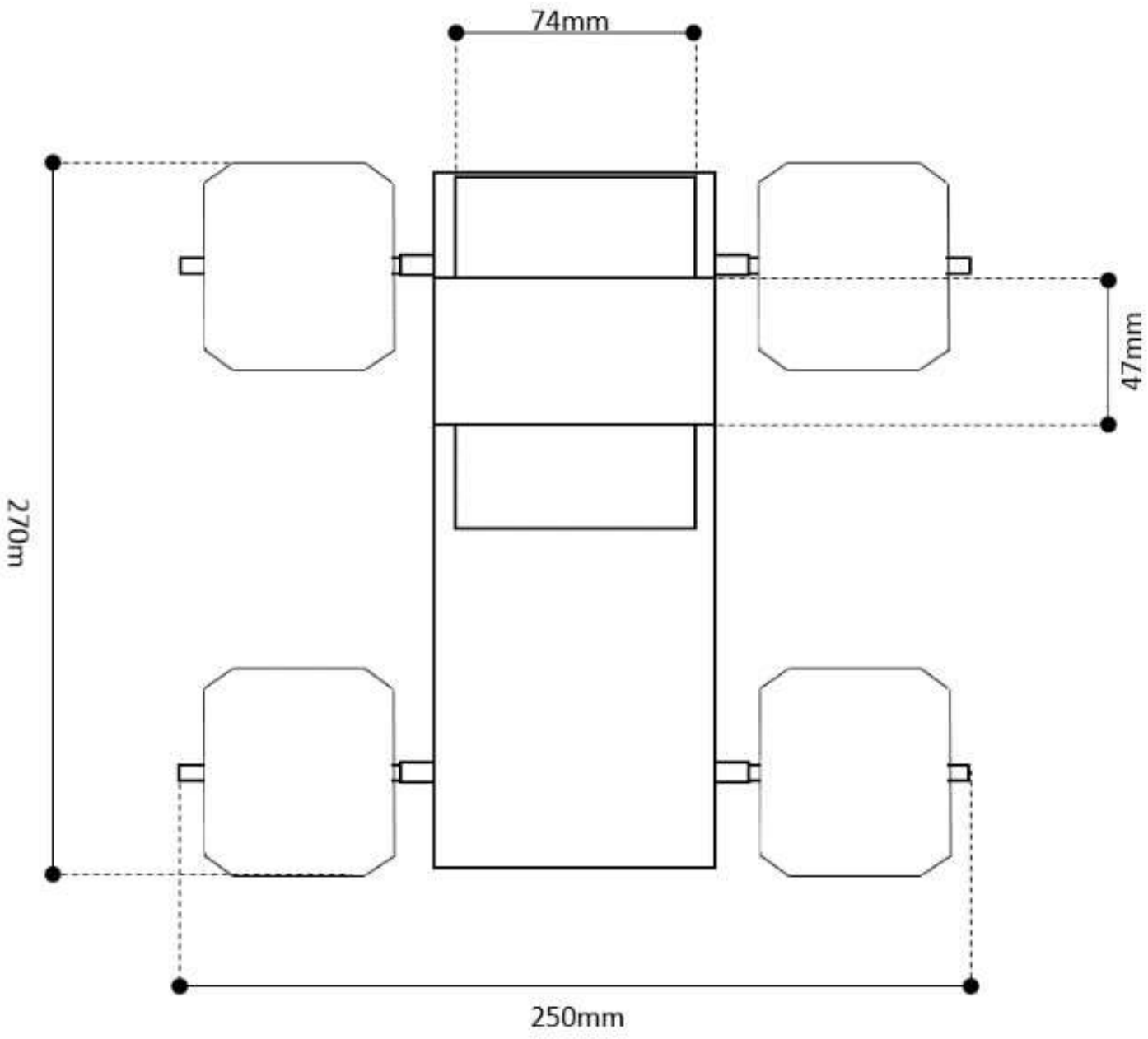

Top view

	Name	**Date**	Do not scale drawing	Revision 4
Drawn	Michael Stone	01/04/17	Curtin's The Avengineers	
Checked	Tashreeq Peck	02/04/17	TITLE: Mars Lander Top View	
Approved	Tashreeq Peck	02/04/17	SCALE: 1:2	Sheet 2 of 5
		DRAWING NO: DRAW_4-4		A4

Number	Description	Quantity
1	Coke can wheel	4
2	Stubby holder	1
3	Wooden plank	1
4	Metal rod	2
5	Drinking straw	2
6	Duct tape	1

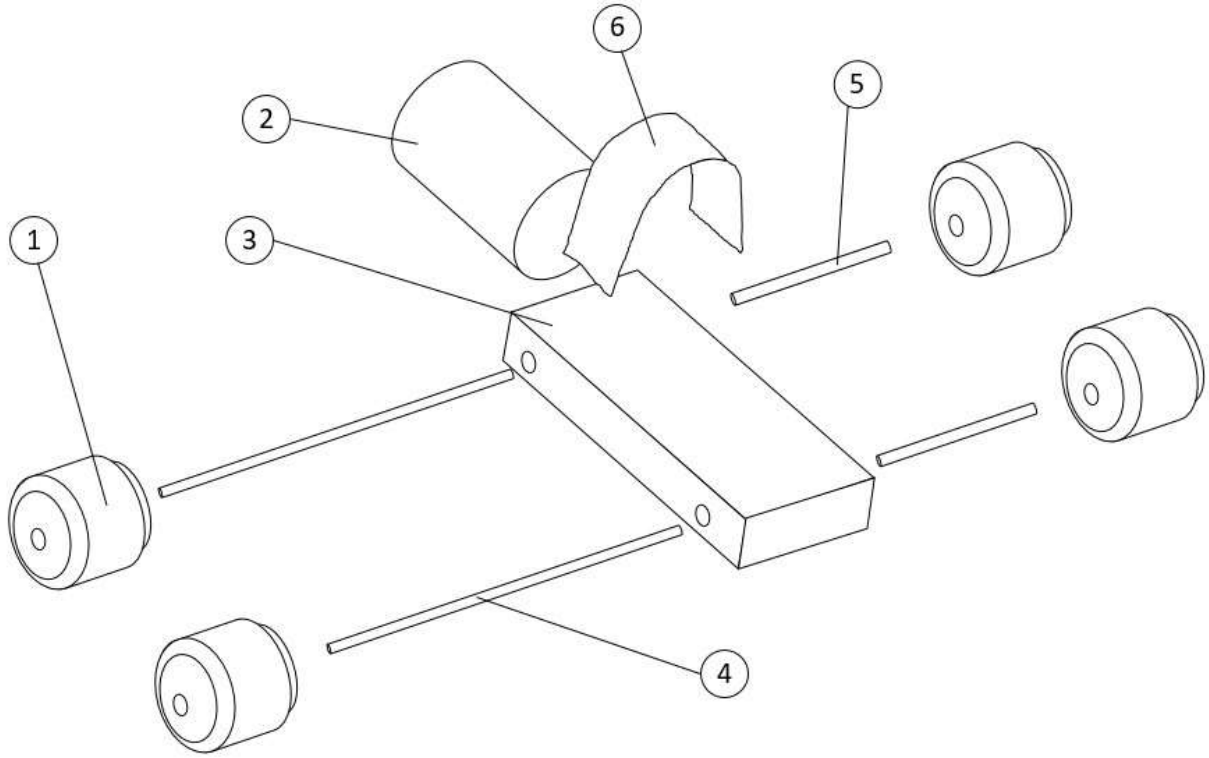

Exploded view

	Name	Date	Do not scale drawing	Revision 4
Drawn	Michael Stone	01/04/17	Curtin's The Avengineers	
Checked	Tashreeq Peck	02/04/17	TITLE: Mars Lander General Layout	
Approved	Tashreeq Peck	02/04/17	SCALE: 1:2	Sheet 2 of 5
		DRAWING NO: DRAW_4-5		A4

Curtin's The Avengineers

Design Specification

Client: EMPACT

Project: Mars Lander

Date 02/04/2017

Revision: 3

Table of Contents

Index of Tables 8

1.0 Introduction 9

2.0 Dimensions Summary 3

3.0 Bill of Materials 9

4.0 Construction Method 9

4.1 Body Construction 10

4.2 Wheels Construction 10

4.3 Body assembly 4

Index of Tables

Table 1 3

Table 2 3

Table 3 3

1.0 Introduction

2.0 Dimensions Summary

Table 1

	Length (mm)	Width (mm)	Height (mm)	Diameter (mm)
Body	220	90	30	-
Wheels	60	-	-	66
Axels	250	-	-	6.3
Straw	110	7mm	-	
Stubby Holder	107	-	-	73

3.0 Bill of Materials

Table 2

	Price	Quantity	Store	Recyclable
Wood	$8.33 per 1200mm	220mm	Bunnings	no
Aluminum Cans	$6 per 10 pack	4	Coles	yes
Glue	$2.77 per 12 pack	12	Bunnings	no
Axle	$2.62 per 1000mm	500	Bunnings	no
Straws	$2 per 100 pack	2	Coles	yes
Stubby Holder	$1.8 each	1	Coles	yes
Duct Tape	$3.65 per roll	1	Bunnings	no
Total	$27.17			

4.0 Construction Method

Table 3

Tools required for construction			
Drill or preferably drill press to drill the axle holes in the wood block chassis. Drill bit needs to be 6.91mm.	Hot glue gun to connect body parts. Gun must feed 11mm diameter glue sticks.	Hand saw or circular saw to cut the wood block to size.	Scissors to cut the aluminum cans.

4.1 Body Construction

- Measure and mark out the body as per DRAW_4-4 along the length of the 1200mm block of wood. Include a 10mm waste
- Saw the block at this mark.
- Mark two points on the side of the block as per DRAW_4-3
- Drill holes all the way through the wood at these points. Use drill head of size 6.91mm.
- Take two of the straws and run them through the newly drilled axle holes. These will act as sleeves for the axles.
- Take the stubby holder and run a thin line of glue along one side for its entire length.
- Place the stubby holder on the topside of the wood block so that the closed end of the stubby holder lines up with the end of the wooden block and allow the stubby to adhere to the wood.
- Once the glue has dried, take two lengths of duct tape and wrap them around both the stubby holder and wood block , at each end of the stubby holder. The stubby should be extra secure now.

4.2 Wheels Construction

- Cut the empty aluminum cans into thirds.
- Make a small cut in the side of one the thirds using a pair of scissors.
- Take the top and bottom thirds, one with the small cut in the side, and insert them into each other.
- Once the thirds are put together and will hold, wrap a length of duct tape around the entire wheel to make sure it is extra secure. Try to make the tape as smooth as possible to avoid irregular rolling of the wheels.
- Repeat this four times so that you have four functional wheels.
- Using one blade of the scissors, poke a hole in the side of the wheel that was made from the bottom third of the can. i.e. the end you don't drink out of.
- Run one end of one of the axles through the hole you made in one of the wheels. Repeat with the other axle and another wheel, leaving one end of each axle unattached to anything.
- Use hot glue to secure the wheels to the axles, at the hole, and allow them to set. Now you should have two wheels each with an axle attached.

4.3 Body assembly

- Take the wheels with axles attached and slide the ends with no wheels through the straws that you previously placed in the axle holes. You should now have the ends of two axles poking out the other side of the wood block.
- Take the other two wheels that you constructed before and connect them to the axles via the holes you poked into the bottom with scissors.
- Take the hot glue gun and glue the axles and wheels together where they meet at the holes. Allow them to set. The wheels should be secure now and the prototype complete.

Curtin's The Avengineers

Risk Management Plan

Client: EMPACT

Project: Mars Lander

Date 02/04/2017

Revision: 3

Table of Contents

1.0 Introduction: 3

2.0 Design Process: 3

3.0 Construction: 4

4.0 Testing: 5

1.0 Introduction:

Risk evaluation is a necessary part of any engineering project as it tends to highlight the various risks involved with various parts of the project, and allows for the mitigation of any potential issues arising from such risks. In the EMPACT Mars Lander project, various risks and ways to manage them should be considered, especially when designing, constructing and testing the Lander. The three most significant risks of each aspect of the creation process have been outlined in the tables below. Each is rated by severity and likelihood on a scale from 0 to 9, with 9 being the most severe and most likely to occur, and 0 being the least severe and least likely to occur.

2.0 Design Process:

Hazard	Risk	Management	Severity	Likelihood	Residual Risk
The Mars Lander won't be able to be built without a design, or won't work if the design isn't up to standard. This would result in a severe loss of marks. This could arise due to the skill level of the designers, or a lack of multiple design ideas.	The team doesn't design the Mars Lander well, or is incapable of coming up with a design.	The team can vigorously test and prototype the various designs they come up with to see which one is better suited. This would perfect the design, ensuring it works perfectly when required.	6 – Severe loss of marks could mean failing the section.	7 – Very likely, especially if it hasn't been tested properly after construction.	If the Mars Lander isn't built to standard, it may not survive the marked testing, and some marks may be lost. This is not as severe (4) and is less likely (5).
The team would score a 0 for the assignment, possibly failing the whole unit. This is under the plagiarism policies of Curtin University.	Plagiarism. This includes purposely or accidentally using someone else's idea without giving credit.	Test each document or piece of work made with Turnitin or other plagiarism software, and be sure what has been written isn't someone else's work or overall idea. Referencing all work will severely reduce this.	9 – It depends on what the punishment is. Getting expelled from the unit is severe, but it isn't a safety hazard.	5 – Only likely, if referencing hasn't been done correctly.	The level of plagiarism may be considered too high, even after precautions are taken. This is less likely (3) but still very severe (9)
These disagreements can affect the quality and progression of the team's work, especially if they are not resolved in a timely manner.	Having disagreements about the design of the Mars Lander. Team needs to settle these in a professional and workfriendly way.	The team can work through these disagreements, considering what each person has to say. A majority rules system could be used, or a common ground could be found.	4 – Arguments and disagreements are common and usually get settled quickly and effectively.	9 – It is almost certain every group will have something that not everyone agrees on.	Poor quality and progression of the team's work can result in an unfinished design package and/or a poorly built Mars Rover, resulting in a loss of marks. Submission of poor quality work is more severe (6) but is not as likely (4)

3.0 Construction:

Hazard	Risk	Management	Severity	Likelihood	Residual Risk
The team would not be able to complete the hand over resulting in an immediate failure of the unit.	The team is unable to meet up to construct the Lander due to transport constraints.	A structured plan timetable needs to be set up so team members can make the proper arrangements.	9 – The team would fail the unit.	4 – Unlikely the team wouldn't be able to organise themselves in time to meet the deadlines.	The team will not be able to come up with a complete compromise. This means that some team members will have to send their apologies in advance. This is not as severe (4) as few team members are better than none. The likelihood of this occurring is high (7) as everyone will not be free at the same time.
The team may not have the required knowledge, skills, abilities, or equipment to build the prototype to specification.	The contractors do not obtain their preferred tender.	If contractors lack the ability to construct the project, they would first need to alter the design so that they are able to construct it.	7 – May result in a loss of marks for the team.	7 – Not getting the preferred tender is a likely situation.	The team may still have difficulty building the prototype. This is potentially severe (5) as they would need to put in more effort to mitigate it. However, if managed correctly, further issues are unlikely (3).
The contractors will need to spend more time improving the design through multiple tests. This means that the team members will be allowed less time for nonEFPC tasks.	The Client provides an ambiguous or inadequate design package.	Thoroughly check the design package and try to detect any errors and make any corrections before constructing the prototype. The team should also try to efficiently clear up any ambiguities by discussing them with the designers.	4 – If there is an error in the design package, it can be fixed, given enough time.	8 – As this is the first engineering project, there are sure to be errors in some design packages that the contractors will need to make themselves aware of.	If the issues are not fixed than a new design will need to be made. This is very severe (8) as it would make the old design obsolete and a significant amount of time will be spent to correct the issue. It is not very likely (2) as the designers and contractors will discuss the designs.

4.0 Testing:

Hazard	Risk	Management	Severity	Likelihood	Residual Risk
The team will need to both redesign and rebuild the prototype so that they can be satisfied with what they hand over.	Repeated testing proves design to be a failure. (Minor changes do not change the end result).	Thoroughly check the design package and try to make any corrections before constructing the prototype.	7 – There may not be enough time to redesign and rewrite the whole design package.	6 – As this is a first-year engineering project, many teams wouldn't be satisfied with their first attempt at designing the lander.	The design still might not be up to the standard they want when it is getting marked. This is less severe (4) as a loss of marks is better than an instant fail. This is also less like (5) but not by much.
Difficulty in pinpointing the issue. This means that the team cannot fix something if they cannot identify the problem.	Every test produces a completely different result.	Try to make each test as fair as possible. This would achieve results to form some kind of pattern so the issue can be pinpointed.	5 – If a certain issue cannot be pinpointed, the Mars Lander may not work to its full potential.	5 – Usually issues are relatively easy to detect.	A small proportion of trials may produce a seemingly random outcome, resulting in a failed test. This is potentially severe (7) but not very likely (3) as overlooking this small number of failures may result in the final assessment mark being compromised. However, by testing consistently, the chance of a failed outcome can be understood and compensated for.
The team will need to rebuild the prototype from scratch resulting in a potentially large amount of wasted time and materials.	Prototype breaks while testing design.	Ensure that the prototype is assembled properly and that the glue has dried or any screws are properly fastened	5 – Wasted materials can be repurchased, however materials which have been fashioned to a certain specification must be remade.	4 – If the Mars Lander is built well, it should not break during testing.	Small parts might still break off as the prototype isn't fully optimized. Changes to the design package will need to be made. This may be expected so it is not severe (3) but it will be very likely (7) because things often don't work out the first time.

Curtin's The Avengineers

Tender Evaluation Criteria

Client: EMPACT

Project: Mars Lander

Date 02/04/2017

Revision: 4

Table of Contents

1.0 Introduction 3

2.0 Criteria Summary Table 3

3.0 Criteria Descriptions 4

3.1 Experience and Qualifications 4

3.2 Access to Equipment 5

3.3 Accessibility 6

3.4 Liability and Other Considerations 7

4.0 Evidence 8

4.1 Experience and Qualifications 8

4.1.1 Recognized Qualifications 8

4.1.2 Experience with Technical Procedure 8

4.1.3 Experience using Machinery 8

4.1.4 Experience in Manual Processing 8

4.2 Access to Equipment 9

4.2.1 Access to Power Tools 9

4.2.2 Access to Manual Processing Tools 9

4.2.3 Access to Workspace 9

4.2.4 Access to Recycled Materials 9

4.3 Accessibility 9

4.3.1 Access to Hardware Store 9

4.3.2 Access to Supermarket 10

4.3.3 Ease of travel 10

4.3.3 Proximity of Team Members 10

4.4 Liability and Other Considerations 10

4.4.1 Responsibility for Material Loss 10

4.4.2 Ability to Work to Deadline 10

4.4.3 Other Notes/Limitations 11

1.0 Introduction

This document contains the criteria that will be used to evaluate potential mars lander construction companies for the construction of the EMPACT mars lander. Groups with a higher score have a greater chance of being contracted. Each subsection is weighted a certain mark, partially filled criteria may still be awarded marks. Evidence should be provided at the end in the relevant sections. Generally speaking, marks will not be deducted if the required evidence is considered to unfairly intrude on the privacy of any group members. Please specify in the relevant evidence section if this is an issue. Any attached photographs should be labelled appropriately with the criteria evidence number and included at the end of the filed-out document.

2.0 Criteria Summary Table

This section summarises the 4 core sections of criteria and their various weightings.

Category Title	Criteria Details	Weighting
Experience and Qualifications	• Recognised Qualifications • • Experience with Technical Procedure • Experience using Machinery Experience in Manual Processing	/30
Access to equipment	• Access to Power Tools • • Access to Manual Processing Tools • Access to a Workspace Access to Recycled Materials	/45
Accessibility	• Access to a Hardware Store • • Access to Supermarket • Ease of Travel Proximity of Team Members	/15
Liability and Other Considerations	• • Acceptance of Responsibility • Ability to Work to Deadline Other Notes/Limitations	/10
	Total	**/100**

3.0 Criteria Descriptions

3.1 Experience and Qualifications

Criteria Details	Please Tick	Evidence Requirements	Weighting
Do any of your team members have any professionally recognized skills and/or qualifications which may be relevant to the construction of a small model consisting of wood, metal, and plastic? E.g. Cert 2 in Woodwork	☐Yes ☐No	In 4.1.1 please provide written evidence (including date) of any qualifications obtained and attach any relevant photographic evidence.	/10
Do any of your team members have prior experience in interpreting technical drawings and/or reading step-by-step procedures, even in a non-professional scenario?	☐Yes ☐No	In 4.1.2 please provide a short written statement for each eligible team member.	/5
Do any of your team members have prior experience safely operating machinery such as Drop Saws, Drill Presses, Ban Saws, Hand Drills and/or other power tools?	☐Yes ☐No	In 4.1.3 please provide a short written statement for each eligible team member including tool used and task performed. Also provide general date of experience.	/10
Do any of your team members have prior experience in manual processing of wood and or/plastic? E.g. the use of sandpaper, wood/plastic/super glue, hand saws and/or production of wooden/plastic models?	☐Yes ☐No	In 4.1.4 please provide a short written statement for each team member and attach any relevant photographic evidence.	**/5**
Total			**/30**

3.2 Access to Equipment

Criteria Details	Please Tick	Evidence Requirements	Weighting
Do any of your team members have access to power tools within their homes which they are able to use including the following: Drill Presses, Ban Saws, Hand Drills, Hand Saws, fractional drill bits (~6.5mm) etc.?	☐Yes ☐No	In 4.2.1 please provide a short written statement for each team member. List any additional equipment which may be relevant. Include drill bit widths near required size.	/15
Do any of your team members have access to manual processing tools within their homes which they are able to use including the following: sandpaper, wood/plastic/super glue, scissors, hand file?	☐Yes ☐No	In 4.2.2 please provide a short written statement for the team as a whole. List any additional equipment which may be relevant.	/5
Do any of the above specified members have an accessible area, such as a workshop, in their home where they can safely use the above tools.	☐Yes ☐No	In 4.2.3 please provide a short written statement for each eligible team member, include photographic evidence. Specify whether or not group members would be comfortable collaborating in such a space.	/10
Do any of your team members have access to any of the following recycled materials: • 375mL Aluminium Cans • Clear Tape • Stubby Holders • Wooden planks/blocks more than 22cm long and 9cm wide. • Super Glue	☐Yes ☐No	In 4.2.4, please provide a short written statement for the team as a whole.	/15
Total			**/45**

3.3 Accessibility

Criteria Details	Please Tick	Evidence Requirements	Weighting
Do any of your team members have access to a hardware store (e.g. Bunnings Warehouse), less than 10 minutes away by any conventional mode of transport?	☐Yes ☐No	In 4.3.1 please provide a small written statement for each eligible team member, include store name and location.	/10
Do any of your team members have access to a general store (e.g. Coles, Woolworths), less than 10 minutes away by any conventional mode of transport?	☐Yes ☐No	In 4.3.2 please provide a short written statement for each eligible team member.	/5
Do any of your team members have access to a vehicle, a driver's license, and the ability to freely use this vehicle to travel to the locations listed above? Do any of your team members have daily access to public transport?	☐Yes ☐No	In 4.3.3 please provide a short written statement for each team member. Photographic evidence not needed.	/10
Do any of your team members live within 30 minutes of each other by any conventional mode of transport?	☐Yes ☐No	In 4.3.4 please provide a short written statement for each team member. Include suburb of residence of each team member if comfortable.	/5
Total			**/30**

3.4 Liability and Other Considerations

Criteria Details	Please Tick	Evidence Requirements	Weighting
Are your team members willing to take responsibility for, and potentially pay for, any damage to materials during the construction or testing process. i.e. if materials were broken/faulty, would you replace them as oppose to attempting to use them in the construction?	☐Yes ☐No	In 4.4.1 please provide a short written statement for the team as a whole.	/5
Do you consider your team able to complete the construction of the model more than 6 hours before the deadline?	☐Yes ☐No	In 4.4.2 please provide a written statement for the team as a whole. Include either anecdotal or photographic evidence of your time of submission of your Design Package, even if it was submitted less than 6 hours before the deadline.	/5
Are there any other limitations imposed on your team or team members which would affect the construction process that you would be willing to disclose?	☐Yes ☐No	In 4.4.3 please provide a written statement for the team as a whole, marks will not be deducted from your total for these limitations. However, they will still be taken into account in the final judgement. Also include any beneficial factors that have not been covered in the criteria.	No Weighting
Total			**/10**

4.0 Evidence

Please include written evidence on the lines below. Attach any photographic evidence appropriately labelled at the end of the document.

4.1 Experience and Qualifications

4.1.1 Recognized Qualifications

4.1.2 Experience with Technical Procedure

4.1.3 Experience using Machinery

4.1.4 Experience in Manual Processing

4.2 Access to Equipment

4.2.1 Access to Power Tools

4.2.2 Access to Manual Processing Tools

4.2.3 Access to Workspace

4.2.4 Access to Recycled Materials

4.3 Accessibility

4.3.1 Access to Hardware Store

4.3.2 Access to Supermarket

4.3.3 Ease of travel

4.3.3 Proximity of Team Members

4.4 Liability and Other Considerations

4.4.1 Responsibility for Material Loss

4.4.2 Ability to Work to Deadline

4.4.3 Other Notes/Limitations


Complete Individual Tender Application
Construct Mars Lander Prototype for Another Company
Complete Tender Application Evaluation
Supervision of the Construction of Designed Mars Lander
LEGEND
NAME
COLOUR
OUTCOME
Luke Day
Purple
Lee Velasco
Red
Tuckaway Peck
Blue
Michael Grant
Green
Orange (Arc), Dirk(?)
Dark Red
Weekly Progress Report
Task Details
Task
Details