REVISIONS			
LTR	DESCRIPTION	DATE	APPROVED
A	REVISED-SEE ECN	11/29/79	
B	REVISED-SEE ECN	11/23/80	
C	REVISED-SEE ECN	1/12/81	

IDENTIFICATION PLATE DETAIL

I.D NO.
SIZE 2 RATING 600
BODY SA105 TRIM HF

MARKING PLATE DETAIL

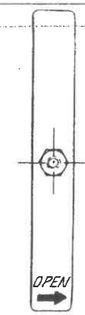

VIEW C-C

VIEW B-B

33. APPLY DESIGN PRESSURE AND TEMPERATURE PER NTL 81345
32. MINIMUM WALL THICKNESS AS MEASURED 4 PLACES, 85°-95° APART.
31. WEIGHT: 60 LBS (CALCULATED)
30. AREAS INDICATED TO BE FREE OF PAINT.
29. APPLY APPLICABLE NOMENCLATURE PER NPS 70007, CLASS 2, CHARACTERS TO BE .093 MIN.
28. PACKING TO BE SHIPPED LOOSE, WITH ZINC ANODE WASERS
27. PACKING FOR TESTING ONLY.
26. APPLY APPLICABLE NOMENCLATURE PER NPS 70007, CLASS 2, CHARACTERS TO BE .187 MIN.
25. SEE NUCLEAR TAG LIST NTL 81345 AND EBASCO ENDRAC NO. 3240-15007 FOR VALVE I.D. NO'S.
24. ALL EXTERIOR SURFACES OF ITEMS 5,8,10,11,16 AND 24 TO BE PAINTED WITH CARBOZINC 11, PER NPS 70708.
23. TORQUE TO 30-40 FT LBS.
22. TORQUE TO 220-250 FT LBS.
21. TORQUE TO 9-12 FT LBS
20. TORQUE TO 20 FT LBS MAX.
19. HEAT TREATED PER MIL-H-6875, CLASS D. COND. H-1075.
18. TACK WELD PER NPB 5-3 ALONG FLAT OF NUT.
17. ORIENTATION OF YOKE TO BODY MAY BE OTHER THAN AS SHOWN.
16. TACK WELD PER NPB 5-3.
15. MATERIAL IDENTICAL TO ASTM A564-72, TYPE 630, (EXCEPT IMPACT TEST).
14. CRITICAL ITEM. TRACEABILITY REQUIRED.
13. CLEANING AND PACKAGING PER NPS 70119.
12. COEFFICIENT OF FLOW: $C_v = 60$ (CALCULATED)
11. PENETRANT EXAMINATION PER NPB 6-1.
10. HARDFACED PER NPS 70508 OR NPB 5-54.
9. SEAL WELDED PER NPB 5-3.
8. HEAT TREATED PER MIL-H-6875, CLASS D. COND H-1100
7. APPLY A THIN COAT OF NEOLUBE TO THREADS NOTED
6. MAX CHLORIDE CONTENT TO BE LESS THAN 200 PPM.
5. DELETED
4. MINIMUM WALL THICKNESS AS MEASURED 3 PLACES, 85°-95° APART.
3. MATERIAL CONFORMS TO ASME BOILER AND PRESSURE VESSEL CODE, SECTION III AND NMS 70478, EXCEPT ULTRASONIC EXAMINATION.
2. TESTING SHALL BE IN ACCORDANCE WITH ATP 104FAC1-001.
1. PRESSURE BOUNDARY ITEM PER ASME BOILER AND VESSEL CODE SECTION III, CLASS 3.

N PRODUCTS

NOTES, UNLESS OTHERWISE SPECIFIED

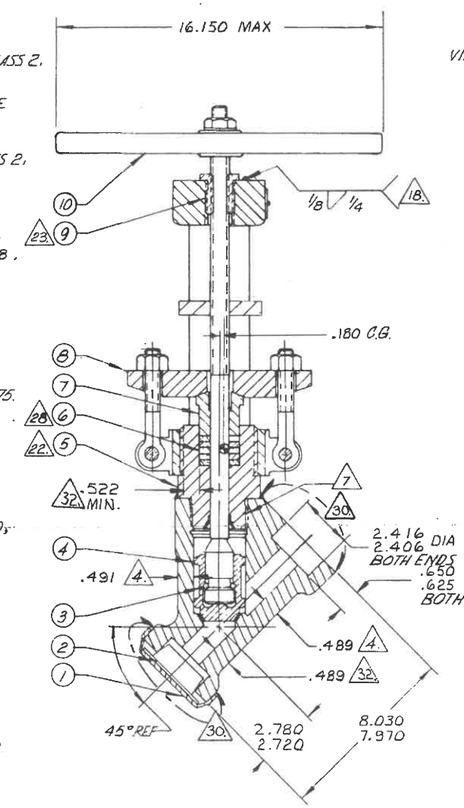

SECTION A-A

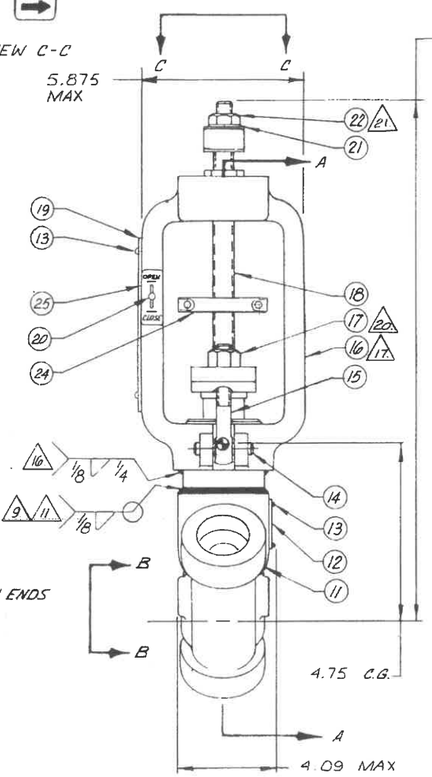

ITEM NO	QTY REQD	PART NAME	MATERIAL	NOTE
25	1	PLATE, POSITION	ASTM A 240, 302	
24	1	CLAMP ASSY	CARBON STEEL	
23	5	PACKING	CRANE 187-I	6, 27
22	1	HEX NUT	ASTM A194, 8M	
21	1	LOCKWASHER	300 SERIES CRES	
20	1	DRIVE SCREW	300 SERIES CRES	
19	1	MARKING PLATE	ASTM A240, 302	
18	1	STEM	ASME SA564.630	8, 11, 14, 15
17	2	HEX NUT	ASTM A194, 8M	
16	1	YOKE	ASTM A216, WCB	
15	2	EYEBOLT	ASTM A564.630	19
14	2	DRIV-LOK PIN	300 SERIES CRES	
13	6	DRIVE SCREW	300 SERIES CRES	
12	1	IDENT. PLATE	ASTM A240, 302	
11	1	BODY	ASME SA105	1, 3, 10, 11
10	1	HANDLE	ASTM A216, WCB	
9	1	NUT, STEM	ASTM B138 NO 675	
8	1	RETAINER, GLAND	ASTM A216, WCB	
7	1	GLAND	ASTM A276, 316	
6	5	PACKING	GRAPHOIL, RIBBON	6, 28
5	1	BONNET	ASME SA105	1, 3, 10, 11
4	1	DISC	STELLITE #6	1, 11
3	1	WIRE	ASTM A276, 316	
2	2	PAPLUG	POLYETHYLENE	
1	AR	TAPE PRESS SENS	PLASTIC	

LIST OF MATERIALS

DR		16 AUG 78
CK		17 AUG 78
ENG		18 AUG 78
APPD		
APPD		
APPD		
17 AUG 78		

Nuclear Valve Division
Borg Warner Corporation
7500 Tyrone Ave. Van Nuys California 91408
Energy Equipment

TITLE VALVE ASSEMBLY - GLOBE, Y TYPE, 2 INCH 600 LB., C.S.

SIZE C CODE IDENT NO 104FAC1-001

WASHINGTON PUBLIC POWER SUPPLY SYSTEM
NUCLEAR PROJECT NO. 3 AND 5
PURCHASE ORDER NO. 3240-43A
VALVE I.D. NO'S 25

E: 249
03-43A 63
104 FAC1-001
C

DISCIPLINE COMMENTS
DUE BY 2/6/81

DESIGN FOR INFO	DESIGN FOR NC	DISCIPLINE	ENGINEERING FOR INFO	ENGINEERING FOR COMM	ENGINEERING NC	ENGINEERING C
X		MECHANICAL		X		
		CIVIL - A S				
		CIVIL - C H				
		CIVIL - ARCH				
		ELECTRICAL				
		INSTR'N				
		CONTROLS				
		PLUMBING				
		HVAC				
		APPLIED PHYSICS				
		WTR TREAT				
		RADWASTE				
		SHIELDING				
		MATERIALS STRESS SUPP & RESTRAINTS				
		CONST		X		
		QAE				
		PQAI				
		MOUNT FACILITIES				

REPRODUCIBLE ILLEGIBLE
ADDRES
STANDARD DISTRIBUTION

406D 6-80

DFS 3240-14612 R 3 DATE REC

WASHINGTON PUBLIC POWER SUPPLY SYSTEM
WPPSS NUCLEAR PROJECT NO. 3

PO 8C-43012 ITEM

A	DRAWING REVIEW	NO COMMENTS, PRINT TO VENDOR	1
		COMMENTS AS NOTED, PRINT TO VENDOR	2
		DRAWING NOT APPLICABLE. PRINT TO VENDOR	3
		NO COMMENTS, NO PRINT TO VENDOR	4 X
		FOR INFORMATION ONLY	5
B	FABRICATION PROCEED	NO FURTHER REPRODUCIBLE REQUIRED	1
		SUBMIT REVISED REPRODUCIBLE	2
		NO FURTHER REPRODUCIBLE REQUIRED	3
		SUBMIT REVISED REPRODUCIBLE	4

REVIEWED BY	DATE	DPIG DIV	REPLY TO WPPSS BY

EBASCO SERVICES INCORPORATED
AGENT
2 RECTOR ST. NEW YORK, N.Y. 10006

406A WPPSS 6-80