IAEA-TECDOC-479

STATUS OF ADVANCED TECHNOLOGY AND DESIGN FOR WATER COOLED REACTORS: LIGHT WATER REACTORS

A TECHNICAL DOCUMENT ISSUED BY THE
INTERNATIONAL ATOMIC ENERGY AGENCY, VIENNA, 1988

STATUS OF ADVANCED TECHNOLOGY
AND DESIGN FOR WATER COOLED REACTORS:
LIGHT WATER REACTORS
IAEA, VIENNA, 1988
IAEA-TECDOC-479

Printed by the IAEA in Austria
October 1988

FOREWORD

Water reactors represent a high level of performance and safety. They are mature technology and they will undoubtedly continue to be the main stream of nuclear power. There are substantial technological development programmes in Member States for further improving the technology and for the development new concepts in water reactors. Therefore the establishment of an international forum for the exchange of information and stimulation of international co-operation in this field has emerged.

In 1987 the IAEA established the International Working Group on Advanced Technologies for Water-Cooled Reactors (IWGATWR). Within the framework of IWGATWR the IAEA Technical Report on Status of Advanced Technology and Design for Water Cooled Rectors, Part I: Light Water Reactors and Part II: Heavy Water Reactors has been undertaken to document the major current activities and different trends of technological improvements and developments for future water reactors. Part I of the report dealing with LWRs has now been prepared and is based mainly on submissions from Member States, and the Agency would like to thank all those individuals and institutions who have contributed to it. In particular the Agency would like to express its gratitude to the consultants, (see attached list) who continuously reviewed the progress of the report and thus contributed substantially to its successful completion. Thanks are also given to the secretaries from the Agency's Division of Nuclear Power, who devoted to the typing of the report.

It is hoped that this part of the report, containing the status of advanced light water reactor design and technology of the year 1987 and early 1988 will be useful for disseminating information to Agency Member States and for stimulating international cooperation in this subject area.

Part II of the report dealing with HWRs is in preparation with release expected during 1989.

EDITORIAL NOTE

In preparing this material for the press, staff of the International Atomic Energy Agency have mounted and paginated the original manuscripts and given some attention to presentation.

The views expressed do not necessarily reflect those of the governments of the Member States or organizations under whose auspices the manuscripts were produced.

The use in this book of particular designations of countries or territories does not imply any judgement by the publisher, the IAEA, as to the legal status of such countries or territories, of their authorities and institutions or of the delimitation of their boundaries.

The mention of specific companies or of their products or brand names does not imply any endorsement or recommendation on the part of the IAEA.

Please be aware that all the Missing Pages

in this document were originally blank pages

CONTENTS

1. TRENDS IN ADVANCED LWR DESIGN AND TECHNOLOGY

1.1 INCENTIVES FOR THE DEVELOPMENT OF ADVANCED LWRs

1.1.1 Status of Current LWRs [1]

By the end of 1987, nuclear power generated about 16% of the electricity worldwide. There were 417 nuclear plants in operation, 337 (~74%) were light water cooled reactors; 54% of nuclear power is produced by PWRs. Nations such as France, the Federal Republic of Germany, Japan, Belgium and Sweden are already heavily reliant on nuclear power. A very broad nuclear power experience is available in the United States of America which has over 100 operating nuclear power units. Nuclear power has established its position as a viable alternative energy source in the world. The current Light Water Reactor technology is a mature and proven one, which had tremendous progress and consolidation in the last decades. The development of the nuclear energy has reached a very high standard in reliability and availability, and a very high level in performance and safety. Since 1984, about 40% of the units are consistently reporting an availability of more than 80%. The high load follow capability of LWR plants is fully compatible with conventional power plants. The nuclear generation cost is compatible with coal and will be cheaper than coal in some regions. A stable construction period of 5-6 years has been demonstrated and even a considerable reduction of that to about 4 years has been realized. The high quality of operation and maintainance has been reached in compliance with the stringent safety requirements, incorporating the feedback from operation experience and the lessons learned from the incidents and accidents.

In some countries the demand for electricity and nuclear power is lower than it was originally expected. Also other considerations, such as high construction costs and long construction periods of some nuclear power plants, and more recently the concern about nuclear safety for severe accidents and radioactive release in the existing reactors, have resulted in a slowdown and re-examination of the nuclear option in some countries. But it can still be expected that the nuclear share of the world's electricity will be increased to about 20% by the year 2000. The programmes for nuclear power as an increasingly important energy source are continued in industrialized and some developing countries, such as France, Japan, the USSR and the UK, India, Korea and China. There are substantial research and development programmes in some Member States for further improving the technologies and for the development of new design concepts in the Light Water Reactor. It is foreseeable and undoubted that the Water Cooled Reactor will be the main stream of nuclear power among all the lines of nuclear reactor types in the next decades in the world.

1.1.2 Incentives for Development of Advanced LWRs [2-4]

As mentioned above, LWRs offer a broadly developed and mature technology basis, and have a potential for further improvement. Various advanced concepts, designs and technologies emphasize plant reliability, availability and safety as well as economy. There are different directions under consideration for LWR technology improvements and developments.

Some countries are aiming at better fuel utilization in current water reactors. Because the plutonium stock in the late 1990s from the reprocessing will considerably increase, and since plutonium can be best used

in fast reactors, one possible long-term strategy of using this plutonium would be to build fast breeder reactors. But the large scale introduction of the fast breeder reactor is not expected to be realized before 2010. The role of LWRs as the main nuclear energy source for electricity will therefore be increased and prolonged to meet the needs, including replacement of aged decommissioned plants. A near-term target is increasing fuel discharge burnup and using plutonium in existing LWRs. A future way might be the introduction of tight lattice core with high conversion ratio, in which only minor modifications over the existing LWRs are required and mainly are in the reactor core and related components.

Some countries have adopted an evolutionary approach to developing LWR plants with enhanced passive safety features, simplifications and prefabrications for the 1990s. The improvements are being based on the feedback from long operation experience with LWRs and results from R&D programmes related to those systems. For these approaches, it is not necessary to build demonstration plants and to conduct long-term development programmes.

There are also initiatives for the development of new concepts, the so-called "Inherently Safe" concepts, which can be called a developmental approach. The PIUS (process inherent ultimate safety) and the ISER (intrinsically safe and economical reactor) designs, in which no core melt sequence has been identified, are the typical examples for these concepts.

1.2 DESIGN OBJECTIVES OF ADVANCED LWRs

The design objectives of Advanced LWRs emphasize plant safety, reliability and availability as well as cost reduction in construction, operation and maintenance.

1.2.1 Safety [5-7]

The safety of operating plants has been periodically improved by backfitting from operating experience feedback and incorporation of advances in technology development. Nuclear power plants operating today have incorporated to a very large extent the lessons learnt from the incidents and accidents. The reactor systems, components and engineered safety systems have become very reliable.

For new plant designs, there are also various options to extend desirable approaches for plant safety and for further reduction of residual risk for nuclear power plant accidents, mainly for core melt accidents and for radioactive release to the environment. One option includes passive safety systems which are conceived to be very reliable and which depend on gravity, thermohydraulics and reactor physics laws, and not requiring the intervention of operators or the use of externally actuated electrical or mechanical devices. Another option includes measures for increasing safety design margins which include lower power density in the core, and larger water inventory in the loops. Then the primary system and power plant would have a longer response time and be less sensitive to plant abnormal initiative events, transients and perturbation. New nuclear power plants are expected to have new man-machine interface systems based on computerized instrumentation.

The public risk from radioactive release to the environment might be further reduced or virtually eliminated for current and future reactors. The controlled containment venting system is being applied in several countries. Measures maintaining containment integrity in case of serious overpressure as

a consequence of a core melt accident, while confining the great majority of fission products and retaining molten core material, are under consideration.

1.2.2 Plant Cost [8]

The competitiveness of nuclear power with alternative power generation is an important factor in nuclear power development. The nuclear electricity costs in different countries vary widely. In some countries, nuclear generated electricity costs much less than the electricity from conventional plants. In general, nuclear power has a clear advantage over coal for baseload electricity generation in many countries. While in some countries there are cheaper coals available near the load centers, and/or extensive infrastructures requiring additional investments, then nuclear power could be less favourable.

Further cost reduction of nuclear generated electricity from new power plants to be built in the near future is expected. In order to achieve cost reductions, plant construction schedules could be shorter, the licensing and regulation made more predictable, construction management improved, and construction techniques upgraded, i.e. automated welding and testing, shop prefabrication of integrated package of equipments, entire subsystems, etc. In some countries, the construction period for ALWR is expected for 4~5 years.

In addition an improvement in plant economics can be achieved by better fuel utilization which could significantly reduce the amount of uranium requirements and separative work units. In some ALWR designs, with once through fuel cycle, fuel burnup extension, spectral shift control with mechanical water displacer rods, or fuel cycle length extension could reduce the fuel cycle cost by 20%, save U-238 resources of about 20% and enrichment work of 30% in comparison with existing LWRs. For spent fuel reprocessing strategy and plutonium utilization, a conversion ratio of around 0.9 is achievable in a convertible spectral shift reactor, or one with a tight lattice core, and with the use of the thorium-U-233 cycle, breeding can be achieved. Thus, the cost in the fuel cycle could be reduced substantially. Other measures could further reduce the plant cost in investment, operation and maintenance, including:

- extention of plant design lifetime up to 60 years,
- possible replacement of components which may shorten the operating period, such as pumps, motors, actuators, I&C systems even to RPV,
- shorten planned outages and prevent unplanned outages by the use of automatic remote controlled inspection equipment with incorporated intelligent electronic systems, 20-25 days refueling outage is achievable,
- increase plant thermal efficiency,
- design simplification in systems and operation.

1.2.3 Plant Performance [9-11]

The operating plant performance has already reached today very high figures. The new designs for ALWRs to be constructed in the 90's have more concern with the plant performance in availability, reliability, operability and maintainability. For this purpose, the design improvements not only focus on the nuclear steam supply system, but also on the entire power plant with its multi-face interactions. The plant availability for ALWRs is aiming at high than 90% in some countries, and the planned outage time at about 20~30 days/yr. on average.

The new design of PWR steam generator configuration, the new material of steam generator tube and optimum water chemistry, show that the steam generator problems which have led to great concern all over the world are being handled properly. Some designs use a canned motor pump as the primary coolant pump instead of a shaft seal pump. The canned motor pump has a demonstrated track record of high reliability, and inherently reduces the potential for small LOCA. These measures are examples to improve the reliability of ALWRs.

Some designs adopt a new control system in order to increase load follow capability and plant operability. The development of new maintanance devices and improved designs for easier access to equipment inside the containment increase the maintainability. Some designs of ALWRs using large-piece forgings for the reactor pressure vessel and bend pipings in place of elbows etc. drastically reduce the welds in the vital components. Therefore, not only the inspection time can be reduced, but also the equipment reliability will be improved. For the long-term development inspection-free instruments, equipments and even inspection-free operation may be achievable, using corrosion and abrasion resistant new materials.

The occupational radiation exposure for operation personnel has been continuously reduced for operating plants and has reached a very satisfactory low level by using remote controlled and automated inspection equipment and the respective countermeasures in the plant design. The more stringent target set in some countries is less than 0.5 manSv/yr.

1.3 OUTLINE OF THE DEVELOPMENT OF ADVANCED LWRs (ALWR)

The trends in Advanced LWR design and technology in the next decades seem to direct towards fuel utilization, evolutionary improvement of plants, as well as innovative designs and concepts.

1.3.1 Improvement of Fuel Utilization

Spectral shift high conversion reactors are described in section 3.2 and 3.5. The concepts relate to a tight lattice reactor core, and are in the feasibility study and in the R&D phase. It is a new way to provide the flexibility of fissile material usage, not only for enriched uranium fuel with a reduction of once-through fuel cycle cost compared to the current LWR, but also for plutonium produced from reprocessing or mixed uranium and plutonium oxide (MOX) fuel. The conversion ratio could reach ~ 0.9. The reactor core and related reactor internals will be of a rather innovative design, which might make a test programme including verification facilities necessary. The other parts will be based on existing LWR plants and will only need minor modification.

The Mitsubishi-Westinghouse (M-W) APWR, which is planned to complete the construction in the late 90s, uses a spectral shift control system with water displacer rods (section 3.9). Along with other measures, e.g. the low power density core, Zircaloy grids, and the radial reflector etc., a saving of 23% in U-238 resources and 30% in enrichment work can be achieved.

Breeding in LWRs is possible and has been demonstrated through an extensive program, utilizing the thorium-U-233 cycle and reprocessing, as described in section 3.12.

These are the typical designs and concepts of ALWRs to improve the fuel utilization for both once-through and recycling strategies.

1.3.2 Evolutionary Approaches for Development of ALWRs

Some countries continue to adopt large sized units, above 900 MWe, for ALWRs to be constructed in the 90s, which are proven to be economical and sophisticated. The French N_4 model (1400 MWe) is a continuous improvement of the P_4 series (1300 MWe) and is under construction. It is the latest generation of PWR in compliance with the French standardization policy and incorporates the feedback from operating experience (section 3.1).

The Convoy plants (section 3.3) are a group of three plants with PWR of the standard size for Germany of 1300 MWe, which are presently under construction. The advanced features of the Convoy concept is mainly in the field of engineering and project management associated with nuclear power plant construction as well as the stabilization of the licensing procedure. The VVER-1800 in the USSR (section 3.7), the Mitsubishi-Westinghouse (M-W) APWR (section 3.9) and Hitachi-Toshiba-GE ABWR (section 3.10) both joint USA-Japan projects, and the UK Sizewell-B Reactor (section 3.11) (U.S.-U.K. project) are planned to be constructed in the 90s. They are the designs of the state of the art incorporating upgrading and advanced technologies in LWRs.

The other designs with evolutionary approaches described in Chapter 3 offer the diversity of options for the development of ALWRs.

Chapter 4 describes various designs of advanced medium sized reactors (~ 600 MWe) for the 90s. The designs incorporate a greater degree of passive safety features, including natural circulation of the reactor coolant, a gravity driven emergency core cooling system, or passive safety injection and passive containment cooling etc., as well as more reliable components and systems and shop prefabrications etc. Laboratory R&D programmes are being planned, but it is not necessary to construct a prototype reactor for this approach.

1.3.3 New Concept of ALWR Designs

Chapter 5 describes the conceptual designs of PIUS (process inherent ultimate safety), including SECURE-P (Sweden), ISER (intrinsically safe and economical reactor) (Japan) and PIUS BWR and PECOS-BWR (passive emergency cooling systems for boiling water reactor) (USA). The ECCS (emergency core cooling system) water supply stored in the prestressed concrete pressure vessel in SECURE-P is for a cooling period of seven days. In the ISER, the ECCS water supply, which is stored in a steel reactor pressure vessel, is reduced to three days. In the PECOS-BWR, ECCS water supply for one day, further reduces the volume of the steel reactor pressue vessel. The use of large vessels to contain the reactor core as well as an ECCS water, implies the possibility of eliminating the pipe breaks and the subsequent loss of the ECCS water. But further research and development work, including detailed design studies, as well as construction and operation of a prototype may be necessary to demonstrate their technical and economic viability.

1.4 LOW-TEMPERATURE NUCLEAR HEAT REACTOR

Nuclear reactors can be used not only for electricity, but also can supply heat as a primary energy for heating purposes and for industrial needs. Technical and economic studies in several countries such as USSR and Canada have shown that the heat delivery from NPPs can be competitive with fossil-fuelled plants and have a lower impact on the environment. In

principle, all existing types of reactors can be used and some of these are partly already being used, i.e. PWRs, PHWRs or the Soviet BWR-G (RBMK) and even the typical BWRs for heat and power co-generation (CHP).

Several countries, like Canada, China, Federal Republic of Germany, France, Sweden, Switzerland and the USSR, have developed or are developing specialized nuclear heating plants (NHP). Compared with nuclear co-generation plants, the specialized nuclear heating plants (NHP) are in an early stage of development and implementation. There are at least two main differences in the conception of the heat producing reactors as compared to reactors of a typical NPP:

a) Due to lower coolant temperature for supply of heat compared to electricity generation and lower energy demand within the limited radius of economic transmission, the nuclear heating reactors are of lower capacity output with lower core power density and with working pressures about ten times lower than that of typical PWRs.
b) The design of these units incorporates in many cases systems with passive safety features. Detailed information about nuclear heat application is given in Refs [12-15]. The summary tables showing the main characteristics of these NHPs are attached in Annex II.

1.5 IAEA PROGRAMME ON ADVANCED LIGHT WATER REACTORS

In order to provide an international forum on the development of the technology of advanced light water reactors, the Agency has launched in its Division of Nuclear Power a programme on Advanced Light Water Reactors. An International Working Group on Advanced Technologies for Water Cooled Reactors (IWGATWR) was established in May 1987. The objectives of IWGATWR are:

In the areas relevant to advanced technologies in light and heavy water cooled reactors with emphasis on their safety and reliability:

a) to assist in defining and carrying out the Agency's programmes in accordance with its Statute,
b) to promote an exchange of information on national and multi-national programmes, new developments and experience, to identify and review problems of importance and to stimulate co-operation, development and practical application of water cooled reactors,
c) to provide Member States with information about the current status and development trends of advanced technologies for water cooled reactors.

The scope of this Working Group covers:

a) improvements of current water cooled reactors,
b) evolution of water cooled reactor design and technology,
c) new water cooled reactor design concepts.

The focus of the IWGATWR addresses:

- programme assessment and planning,
- system analyses and fuel utilization strategies,
- research, development, design and cost related aspects of
  . reactor core
  . plant systems and components
  . reactor and plant structures and containment,
- plant operation and maintenance.

The Working Group will co-ordinate its activities with other Agency programmes in interfacing areas, as well as with related activities of other international organizations.

This report represents the first comprehensive effort within the framework of the IWGATWR to document all major current activities in the application of advanced technologies to future light water reactors, and thereby to contribute substantially to meeting the objectives b and c, above.

2. PROGRAMME FOR ALWR DEVELOPMENT

2.1 FINLAND [16-19]

In Finland, about 40% of the electricity is generated by nuclear power. Installed capacity is 2 x 465 MWe PWR and 2 x 735 MWe BWR. Due to the structure of electric power production and consumption, huge efforts have been made to achieve the minimum duration of outage and minimum disturbances during operation. The reloading outages have been 15-30 days. The load factors of the two Loviisa units have risen to above 86%, and of the two Olkiluoto units to above 91% (1986).

Activities on advanced technologies for the present light water reactors are mainly concentrated to measures for core melt accident mitigation. In Loviisa plant, the new process computer system and the simulator will replace the old ones and the outside cooling of the containment shell has been chosen for further studies. In Olkiluoto plant (TVO I/II), water filling and filtered venting of the containment will be implemented.

According to an "Electrical Energy Package Plan" presented in 1986 by the Ministry of Trade and Industry, some 2700 MWe additional capacity, of which 500-1000 MWe will be nuclear power, is required by the year 2000. Before Chernobyl, a new joint company, Perusvoima Oy (PEVO) was founded to build and operate the next nuclear power units. When feasibility studies were completed, an application for decision in principle was filed in March 1986 by PEVO. After Chernobyl, the processing of this application was stopped. However, the public attitude towards nuclear power is recovering from the Chernobyl-effects. It is expected in the future that nuclear power will still be considered as the most viable alternative for energy production in Finland. And the interest will be in LWR development. Because Finland is not a NSSS-producer, the development work is mostly concentrated on safety and architect-engineering aspects. In December 1982, new general safety criteria were issued in Finland. According to these criteria, core melt accidents have to be taken into account in the design of new nuclear power plants. Then a severe accident research project was initiated in 1983. A work to collect the design and safety requirements for PWR's in the 1990's is in progress. TVO (Imatran Voima Oy) has made in December 1987 a co-operation agreement with the Swedish ABB ATOM for development of BWR 90 design adapted to the Finnish conditions. The future programme for short term targets (to 1991-92) is a guarantee of licensability according to new requirements, and for the long term (after about 1995) will present PWR and BWR solutions with further evolutionary developments.

2.2 FRANCE [20-22]

The electricity output generated by nuclear power plants in France is now 45 GWe (about 70% of total power capacity). By the end of the century, France may install a capacity of 70 GWe with 60 units, around 90% of the nation's electrical power. The programme of fossil fuel replacement by nuclear is coming to the end. The standardization policy which is one of the reasons for the success of the French nuclear programme compromises between evolution and stability by continuous evolution in successive series:

900 MWe, 34 units, CP1 - CP2 series,
1300 MWe, 20 units, P4 series.

A new subseries of 1400 MWe units has been launched in 1984. The first unit being due for operation in 1991, and the plants of this model should still be in operation 40 to 50 years from now.

EDF will keep the same principles for the evolutionary programme which is preceeded by series, improving the design without significant changes. For R&D of current reactors, EDF spends 500 Million FF (about US$ 88.5 Million) each year related to improvements of safety, reliability and availability of operating plants. For example, the M3 project is considered to increase the power output of the 28 units in the CP1 - CP2 series by 4.3 per cent. For the present PWRs, the lifetime is expected to be extended up to 40 years. All of the 900 MWe units will progressively evolve toward a quarter reload scheme, with 3.7% enriched fuel and a 42 000 MWd/t average discharge burnup. A 10% decrease in the fuel cycle cost is expected as a result of this improvement.

For future standards of French PWRs in the year 2000 and after, a study called "REP 2000" ("PWR - year 2000") was started in 1986 by EDF. The objectives of the standard are: load follow capacity, cost effectiveness and operation flexibility. With the essential portion of nuclear power, the grid requires a prescribed load following pattern of the NPP probably with a new design of control (grey rods). And with the aim of improving the grid, it is planned to develop an automatic and centralized units power control systems at the national level. A construction cost reduction of 5% is expected with the N4 model, but for the period of the years of 2000-2020, the economic aspects are not really clear at the moment. The conclusions of the "REP 2000" study should be available in 1988. These studies should be followed by a preliminary design stage (definition of the main technical options and of the basic safety options), then by the next design stage in the beginning of the 1990s. The detailed design and the construction of the first unit may begin with a commissioning purpose at the beginning of the next century.

From reprocessed spent fuel, France will obtain a substantial stockpile of plutonium. In the 1990s, France will enable fabrication of approximately 100 t/yr of mixed uranium/plutonium oxide fuel assemblies (MOX), which were planned to be loaded in some 900 MWe nuclear plants with a ratio of 30% MOX and in one 900 MWe plant with a potential 100% MOX fuelled core. Actually, the first reload is in operation since the autumn of 1987, in the 900 MWe ST-LAURENT B1 unit with the design burnup level of 33 000 MWd/t. The recycling program will grow and reach more than 60 t/yr of MOX fuel by 1993.

For further improving of fuel utilization in PWRs, the three French partners, CEA, EdF and FRAMATOME had jointly started a three year programme from 1984 - 1987 to assess the feasibility of the convertible spectral shift reactor RCVS. The FRAMATOME's effort was estimated to be about 40 million FF per year. Related R&D programmes are concentrating on the validation of computer codes for core physics and thermohydraulics analysis. An extensive experimental programme has been undertaken since the end of 1984, with two critical facilities EOLE and MINERVE at Cadarache and with thermohydraulic facilities at Grenoble. The first part of the research programme which defines the feasibility is scheduled for the middle of 1988. It is expected that no RCVS will be completed before 2002 or 2005 and no detailed design study should be undertaken before early 90s.

2.3 FEDERAL REPUBLIC OF GERMANY [23-25]

In the Federal Republic of Germany around the year 1990, the share of nuclear energy following completion of plants still under construction will increase to roughly 40%. Any further expansion will depend on the power

consumption growth rates, replacement of old plants and competition with coal-fired power plants etc. German experience to date in the construction of nuclear power plants has consistently confirmed the decrease in power generation costs as the size of the plant increases. The first 360 MWe PWR plant commissioned in 1969, which incorporated all of the major features of future Siemens PWR technology in terms of component and systems engineering as well as plant design, for example: Incoloy 800 in use for the first time worldwide as steam generator tube material, reactor coolant pumps with removable shaft adapter ensuring trouble-free gasket maintenance etc. Only one year later the 1200 MWe PWR BIBLIS-A plant started construction in 1970, followed by the orders for eleven 1300 MWe PWRs and BWRs.

At the end of the 1970's, the safety requirements increased rapidly. The safety philosophy gives the priority to primary safety measures, i.e. accident-preventing action ahead of measures limiting or mitigating accidents. The use of very tough materials, as well as low stress levels and optimized designs mean that the safety of a component is no longer dependent on stringent fabrication and inspection requirements alone, so the possibility of sudden failure is precluded. This safety philosophy is expected in the long run to be internationally accepted. The safety review of German nuclear power plants confirmed the considerable advantages of the structure of engineered safety systems and the technology related to information process and display. Only minor amendments were introduced in the plants for further reduction of residual risk.

The concept of convoy project processing presented in 1980 envisaged in-depth standardized planning of the so called power block including reactor building, reactor auxiliary building, emergency feed building and turbine building, together making up roughly 80% of a power plant, plus standard licensing documents. This approach was quite successful, taking into account Germany's federal structure and consequent decentralization of responsibilities and procedures. The three projects being processed along these lines are below the original budgets. The entire construction activities being covered by two construction licenses and one commission license in each case. Time schedules could have been shortened.

The further development of Advanced LWR with its large potential will place emphasis on shortening construction periods, reducing costs, automation of plant operation and perfection of service activities with the aid of specialized tools and procedures. Intelligent computer systems will take over supervision and control of the entire plant. Recently Siemens is considering a 1000 MWe 3 Loop PWR for a number of international proposed sites. The new plant follows closely internationally applied safety and licensing practices. The improvements mainly are optimization and simplification of the design in the sense of improving operability, maintainability and economic viability of the entire plant.

The Federal Republic of Germany is also interested in the recycling of reprocessed plutonium and residual uranium. As of March 1987, more than 25 000 Mixed oxide (MOX) fuel rods had been inserted and irradiated in PWRs and BWRs, the maximum burnup achieved being beyond 52 000 MWd/tHM. A joint development of a high converter design basis by Kernforschungszentrum, Karlsruhe, Swiss Federal Institute for Reactor Research (EIR), at Würenlingen, Technical University of Braunschweig and Siemens is going on. With a high conversion ratio (~ 0.9), reduction in fuel consumption of 50-70% would be obtained, compared with the once-through fuel cycle at current PWRs, without having to alter major existing PWR technologies. Relevant integral measurements are carrying on in zero-power reactor

facility, PROTEUS at EIR. A 5 MW high pressure water test facility has been installed at the Siemens Karlstein research centre for the thermal-hydraulics.
Detailed design studies related to the core and pressure vessel internals for a light water high converter are under way at Siemens. In order to keep the fuel cycle costs acceptably low, it is necessary to aim at high discharge burnup and longer cycle length. In-pile tests with steel clad subassemblies are planned at the Obrigheim PWR.

2.4 JAPAN [26-28]

In Japan, nuclear power plants now in operation total 36 units for 28.046 GW (October 1987). The installed nuclear capacity would increase to 34 GW (about 19% of total installed capacity) by 1990, 48 GW (23%) by 1995 and 62 GW (27%) by the year 2000. The targets for further development of LWR are sophistication over three generations of LWRs: existing plants (now in operation and under planning for operation in the mid-1990s), advanced LWR plants, and the next generation type of LWR plant.

The technical development of APWR (Mitsubishi-Westinghouse) and ABWR (Hitachi-Toshiba-General Electric) are well under way. MHI (Mitsubishi Heavy Industries, Ltd.) and Westinghouse have been working together under the support and guidance of 5 Japanese utilities in an Advanced PWR programme since 1981. In the design, a moderator control feature has been added, using water displacer rods referred to as mechanical spectral shift. By virtue of fuel cycle prolongation and other improvements in APWR, the fuel cycle cost can be reduced about 20% as compared with current PWR's. Significant reductions in the requirements for both separative work units and uranium are accomplished. Verification testing of the major components was completed by early 1987. An extensive review programme of the design has taken place with U.S., Belgian, and Japanese utilities. Construction site has not been decided yet.

ABWR development began in 1978 with the formation of the Advanced Engineering Team (AET). Organized by General Electric, AET consisted of technical specialists from the worldwide BWR suppliers - Ansaldo Mecanonico Nucleare SpA (AMN) of Italy, ABB-ATOM of Sweden, General Electric, plus Hitachi Ltd and the Toshiba Corporation of Japan. During 1978 to 1979, referred to as Phase 1, AET developed a feasible conceptual design of an imprpoved BWR. Phase II of ABWR development was an integral part of the LWR Third Improvement and Standardization Programme undertaken by the Japanese Government, utilities, and manufacturers. During Phase II, General Electric, Hitachi and Toshiba engineered a detailed design which was evaluated favourably, and conducted a wide range of tests to confirm the reliability and performance of the new technologies to be employed. Phase III, the final phase in the ABWR's development, came to a close in December 1985. The purpose of this was to simplify systematically the ABWR and reduce its cost.

The ABWR is now ready for lead project application in Japan. The ABWR has been selected by the Tokyo Electric Power Company for its next two units at the Kashiwazaki-Kariwa Nuclear Power Station site. These units are planned to begin commercial operation in July 1996 for K-6 and in July 1998 for K-7. (K-6 and K-7 stand for Kashiwazaki-Kariwa Unit 6 and 7 respectively).

The basic direction of the next generation of LWRs - Japan (called AA-LWRs) will be designed by modification of A-LWRs to meet future social and economic requirements. The technical development of the next generation

of LWRs will take more than 10 years, and a further 10 years until the installation of the first unit, which is expected to be around the year 2005. In order to meet future social and economic needs, the next generation of LWRs will be aimed at further enhancing the functions of reactor cores, enhancing fuel performance, improving safety design technique, utilizing more advanced technologies, and improving aseismic technology (siting free). The highlights of the developmental targets are listed in Table 2.4.1.

TABLE 2.4.1
DEVELOPMENTAL TARGETS FOR SOPHISTICATION OF LWR TECHNOLOGIES

	Existing LWRs (results in FY 1984)	Sophistication of Existing LWRs	Development of A-LWRs	Development of AA-LWRs
Economic Improvement	---	---	10% Reduction in kWh Cost from existing LWRs	10% reduction in kWh Cost from A-LWRs
Improvement of Availability Factor	75.3% (Continuous Operation Time: 11 months, Periodical Inspection Time: (80-120 d)	80-85% (15 months) (60 d)	85-90% (Over 15 months) (50-60 d)	90-95% (Over 18 months) (40-50 d)
Saving of Uranium	---	---	10-20% from Existing LWRs	Over 10% from A-LWRs
Reduction of Exposure Dose	3.7 manSv/ reactor-yr	2/3 of current average	0.5-1 manSv/ reactor-yr	Less 0.5 manSv/ reactor-yr
Reduction of LLW Products	1600 drums/ reactor-yr	---	100-200 drums/ reactor-yr	Less 100 drums/ reactor-yr
Expansion of Candidate Site	Bedrock Limit to feasible siting places	---	---	To expand feasible siting land by siting on quaternary period layer and adoption of earthquake isolation design for plants

For the utilization of plutonium in light water reactors, a three-stage plan has been prepared by MITI (the Ministry of International Trade and Industry). The plan includes a small scale test programme scheduled for the immediate future, a large scale demonstration in the first half of the 1990s, and a full scale use scheduled for the second half of that decade. The small scale demonstration programme was designed to use two MOX fuel (uranium-plutonium mixed oxide fuel) assemblies in the Tsuruga Power Plant Unit 1 (357 MWe BWR) in 1986, and four MOX fuel assemblies in Mihama Power Plant Unit 1 (340 MWe PWR). For large-scale demonstration, one BWR and one PWR will each be loaded with MOX fuel assemblies up to one quarter of the core. First loading in BWR is planned around 1992 and in PWR around 1994. The power rating of the BWR and the PWR will be at least 800 MWe output. For the full-scale demonstration programme and the beginning of commercial use with both the BWRs and PWRs the start time will be around 1997. For the utilization of recovered uranium from the reprocessing of spent fuel by some time around 1995, specific studies are planned considering re-enrichment process for use in LWRs and as material for MOX fuel.

In order to assure the promotion of nuclear power for 21st Century, it is necessary to perfect safety assurance measures. A 'Safety 21 Committee' was organized by MITI in March 1987 to determine 'Safety 21: Improvement of Safety Assurance Measures for Nuclear Power Generation', to perform safety plan steadily and to continue the efforts for improvement of safety. In April 1987 a 'LWR's Technology Sophistication Committee was organized to review the total research programme for LWR developments. Under the Committee there are 5 groups:

1. Next Generation LWR's Working Group
2. Existing and Advanced LWR's Working Group
3. Fuel Technology Working Group
4. High Technology for Seismic and siting Working Group
5. Investigation of Foreign Technologies

2.5 SWEDEN [29]

In Sweden, 12 nuclear power plants are in operation, of which 3 are PWRs and 9 are BWRs, and they produce 50% of the total electricity generation. The operating experience of the nuclear plants has been good with high capacity factors and low occupational radiation exposure figures. In 1986, the average capacity factor was 80.5% (85.4% for the BWRs). The annual occupational radiation exposure has throughout the years been around 1 manSv (100 man rem) per reactor unit (for the BWR plants).

However after a referendum in 1980, which resulted in a majority for completion of the 12 reactor programme, the politicians decided that then no more nuclear plants were to be built, and that the energy policy should aim at a total phase-out of nuclear by the year 2010.

In 1981, the Government stipulated that means to control and minimize release of radioactive matter to the environment in the event of one extreme accident (resulting in a degraded core) were to be provided at all the operating nuclear power plants before 1989. Consequently, the utilities have concentrated their development efforts to the plants in operation, partly to meet the "degraded core accident" requirment, partly to improve the operational flexibility and reliability of the plants, and to simplify operation and maintenance. The FILTRA installations (filtered vented containment systems) are now nearing completion at the different plants.

The utilities have also been engaged heavily in the development activities related to the back end of the fuel cycle, and to a safe final storage of low and intermediate level radioactive waste, for which the first stage of the repository has been taken into operation at the Forsmark site, under the sea bed of the Baltic. As for the fuel cycle back end, the preferred solution was to build an intermediate storage facility CLAB (at the Oskarshamn site) where the spent fuel from all the nuclear plants is stored for a period of 35-40 years. Then the spent fuel will be "packed" in canisters and placed in a final repository, a tunnel system in stable bedrock at a level of about 500 m below grade. The construction of this repository will probably not start before the turn of the century, but quite a lot of development work is being carried out in various areas.

With no near term prospects of new nuclear plants to be built, ABB ATOM, the only nuclear plant vendor in Sweden, is directing a major portion of its development activities to support the utilities and the plants in operation, but is also actively pursuing various research and development programmes independently. Examples are: water chemistry and material properties programme to eliminate IGSCC (inter-granular stress corrosion

cracking), and to minimize radiation levels for maintenance, wet oxidization of radioactive waste and solidification in cement, improved computer systems and special computer programmes for improved monitoring of plant and fuel conditions, and fuel development - advanced BA (burnable absorber) strategies for BWR and PWR fuel, reduced susceptibility to PCI (pellet clad interaction), and for increased burnup. A new generation of SVEA fuel with 10 x 10 array and 9 mm rods is introduced instead of 8 x 8 array and 11 mm rods.

ABB ATOM has made a thorough review of its BWR design, based on the experience from the construction, commissioning and operation of the Forsmark 3 and Oskarshamn 3 plants, with the aim of evaluating possible improvements, simplifications and cost reductions. The result, the BWR 90, has significantly reduced building volumes, shortened construction time, and decreased amounts of systems and components, and includes measures for simplified operation, testing and maintenance, i.e. the costs will be lowered, and the plant operation more simple. Design measures to cope with a "degraded core" accident have also been included in the new concept, so that the public and the environment should be protected even in such a low probability event.

ABB ATOM has furthermore for more than a decade been working on reactor design concepts, the SECURE reactors, in which the nuclear safety is based on simple immutable natural laws (gravity & thermo-hydraulics) only - the PIUS principle. In LWR, major release of radioactive matter to the environment with prompt or delayed significant health effects must always be preceded by core overheating or melting (core degradation), and prevention of core degradation therefore guarantees absence of serious accidents. In the SECURE reactors, the PIUS design principle is applied uncompromisingly to ensure protection of the core against overheating and melting under any credible or conceivable conditions. This means that the "degraded core" accidents are completely eliminated, i.e. in the SECURE reactors the utility will be protected against the risk, even though very low in other LWR plants, of a core melt and its disastrous economic consequences. The PIUS design study of a 600 MWe unit with external pump and steam generation loops is proceeding.

2.6 UNITED KINGDOM [30-31]

In the United Kingdom, it is foreseeable that a strong nuclear industry and a sizeable nuclear power generation are needed, because the conventional resources are difficult to meet the country's long term energy needs. A very extensive public inquiry for the Sizewell B nuclear power station was set up by the Government, lasting from January 1983 to March 1985. This inquiry examines very wideranging terms of reference, including need, economics, site and local environmental consequences, as well as safety, which will have a major long term effect on safety assessment attitudes in the UK. After that, the British government gave full planning approval and full financial approval to the construction of a PWR at Sizewell in Suffolk in March, 1987. Work on the site began soon afterward. Before the end of 1987, the Central Electricity Generating Board (CEGB) applied for planning approval for a PWR at Hinkley Point and the further PWRs in subsequent years.

Over 90% of the Sizewell-B project will be spent in the U.K., the value of imported hardware being only 3%. Contracts have already been signed with British companies for the steam generators, turbine generators, pressurized and high pressure pipework as well as reactor coolant pumps and motors. The assessments made would allow the Sizewell-B to provide electricity at a

substantially lower price than the AGR, Advanced Gas (CO_2) Cooled Reactor. A unit cost of 2.33p/kWh would be achieved against a projected 3.05p/kWh for a new AGR. These lower costs stemmed from the PWR's lower capital cost, lower fuel costs and longer life (up to 60 years for ALWRs).

2.7 UNION OF SOVIET SOCIALIST REPUBLICS [13,32]

At the end of 1986, the Soviet Union had 27.7 GWe of capacity in operation, accounting for about 10% of national electricity output. Over 50% of this capacity comprises RBMK (graphite-moderated boiling water, pressure tube reactor). Because of the Chernobyl accident, the number of RBMK plants in the USSR will be limited to 21, including 13 in operation and 8 in various phases of construction. Future nuclear power plants will be of the VVER type. The installed nuclear capacity is projected to be 100 GWe by the year 2000, about a 25% share of USSR electricity generation.

Further development of nuclear power in the USSR will be evolutionary, based on the experience accumulated from plant operation and design. 10 units of the VVER-1000 MWe were designed between 1974 and 1980. For improvement on these units, the design is updated with certain features, for example: the increased use of the passive systems, the installation of diagnostic and automatic process control systems and the increase of effectiveness of the control mechanism, etc. The design of the VVER-1800, (5250-5800 MWt), an upgraded, more economical and safer version of the VVER-1000 PWR, has been started by the Kurchatov Institute of Atomic Energy. It is planned to build two VVER-1800 by the year 2000.

In the USSR, the electricity and heat co-generation (CHP) technology is used at several NPPs in different sizes of PWRs as well as RBMK. Use of special turbines at such CHP-NPPs permits the heat supply from one 1000 MWe power unit to be increased up to 900 Gcal/h. By the year 1990, the construction of this kind of CHP-NPPs is envisaged in several cities. A special heating reactor, AST-500 (500 MWt) has been developed, designed for generation of heat in the form of hot water. AST-500 is a water-water vessel-type reactor with respect to the inherent safety principles used in the design, which can be built in a close vicinity of the population center. The two AST-500 pilot plants now are under construction.

2.8 UNITED STATES OF AMERICA [3,33,34]

In the United States, the size of the U.S. grid is approaching 700 GW of generating capacity. If demand for electricity were to grow at a rate of 3% per year, the U.S. would need to add some 21 GW of new capacity each year, after present excess capacity has been absorbed. This is equivalent to 21 large, 1000 MWe generating stations. If a significant fraction of this growth is met by nuclear power plants, this would be by far the largest potential market in the world.

The United States has embarked upon an aggressive LWR revitalization programme. The Department of Energy and the Electric Power Research Insitute (EPRI) have jointly developed an advanced light water programme to be pursued over a five-year period. A key feature of this programme is that it joins elements of the utilities (EPRI), NSSS vendors, architect engineers, Nuclear Regulatory Commission, and the Department of Energy into a single comprehensive effort to design and certify the next generation of LWRs for utilization by the U.S. utilities.

The programme has four major parts:

1. to determine a set of stable regulatory requirements which must be met by the next generation LWR,
2. to generate a utility and NRC approved plant Requirements Document for the next generation LWR nuclear power plants,
3. to produce the detailed engineering designs and obtain NRC licensing certification for the next generation LWRs, and
4. to produce designs for a medium-capacity APWR and ABWR.

As a first step in establishing design requirements for the next generation of LWRs, it was necessary to work with the NRC to determine the safety and licensing requirements which would have to be met by the new design. The purpose of the Utility Requirements Document is to use utility operating experience with current generation plants to generate the design specifications for the next generation. The new reactor designs generated under this effort are evolutionary rather than developmental in nature; that is, they rely on proven design concepts insofar as possible. No design which would require extensive development and building of a prototype reactor for concept demonstration is being accepted. Emphasis is being placed on:

- elimination of unnecessary complexity
- evaluation of design margins
- improved operability and maintainability; and
- improved constructibility

In 1991, the GE and CE large plant designs are expected to get final design approval and certification from the NRC. Westinghouse is also pursuing NRC approval of a large plant design via a program initiated prior to the DOE/EPRI program.

In the final part of the programme, DOE and EPRI have an ongoing effort on the design of medium-capacity(600 MWe) LWRs. Phase I of this programme, to generate initial conceptual designs, was completed. Various design options were screened, and the most promising conceptual designs were selected. Phase II, which involves further work on the most promising designs and co-operative design and testing supported by the U.S. Department of Energy, began in June 1986, and will continue through 1989. For the 1988 fiscal year, Congress has appropriated US$ 17 million for DOE to use in support of the entire ALWR programme. When the Phase II effort is completed at the end of 1989, the completed conceptual designs will be evaluated by industry and government.

In 1989, the development of comprehensive requirements and criteria which will improve construction quality, cost and duration will be completed, the improvement of instrumentation and control systems will be achieved and the conceptual design development and required testing for Westinghouse and GE mid-size plant designs will be accomplished.

For uranium utilization improvement, the U.S.A. concentrates on the once-through fuel cycle, because spent fuel is not expected to be reprocessed in the foreseeable future. The greatest part of this interest has been focused on backfittable improvements, i.e., on those improvements that can readily and economically be implemented in both existing and future plants [34].

2.9 CMEA Member Countries [32,35]

At present, over 20 nuclear power plants with a total capacity of about 36 GWe, operate in the CMEA member countries: Bulgaria, Hungary, the GDR, the USSR and Czechoslovakia, in 1986, accounting for 9.9% of total electricity generation. Over 80 units of nuclear power plants and nuclear heat and electricity plants (NHEP), with about 70 GWh capacity, are under construction or preparation for construction, in Bulgaria, Hungary, the GDR, the Republic of Cuba, Poland and Czechoslovakia and the USSR. In the comprehensive Programme of Scientific and Technological Progress up to the year 2000, the accelerated development of nuclear power is incorporated as the third priority area. The CMEA member countries are convinced of the necessity to develop nuclear power at a higher rate, as compared with the traditional energies. Under the Programme in the CMEA member countries, except the USSR, by the year 2000, the electricity generation by nuclear power will increase from 8 GWe in 1986 to 50 GWe, about 30-40% of the total electricity generation. The implementation of such an extensive programme needs close co-operation in science, technology and production. An agreement was signed on the multilateral international specialization and co-production and mutual deliveries of equipment for nuclear power plants. The industry of eight participating countries (Bulgaria, Hungary, the GDR, Poland, Romania, the USSR, Czechoslovakia and Yugoslavia) specializes in the production of equipment, fittings and instruments with VVER-440 and VVER-1000 reactors.

The Soviet Union produces virtually all kinds of equipment, and supplies the CMEA member countries with over 50 per cent of basic equipment for VVER-440 and VVER-1000 units.

In the CSSR, the nuclear power share of total energy consumption will increase to about 17% in the year 2000 as compared with 13.7% in 1980. Preparation for the construction of 4 units with VVER-1000 reactors has been under way. The CSSR ranks second following the USSR as the biggest manufacturer and supplier. Specialized production and supplies from the CSSR cover 80 per cent of a whole range of technological equipment for VVER-440 and VVER-1000, including reactors, main shut-off valves, separator of steam superheaters, special pumps, fittings, as well as control and instruments.

In the German Democratic Republic, the future electricity requirements will be met solely by expanding nuclear power capacity, all by VVER-1000. The two units are due in service in 1991 and 1993.

In Poland, the construction of the first nuclear station with 4 x 440 MWe VVERs began in 1985. The units are due in service between 1990 and 1994.

In Bulgaria, two VVER 1000 reactors are under construction. A 1000 MWe VVER is planned to be added to the grid every other year. Nuclear power will share 40% of total electricity generation in 1990 and 60% in 2000.

After the Chernobyl accident, the prospects for nuclear power was not struck out in the CMEA member countries. But the research and development are more focused on safety and reliability. Within the framework of the Comprehensive Programme, the co-operation on the improvement of safety for current reactors includes the development of new types of equipment, non-destructive inspection and diagnostic instruments, the automazation of the control system, reconstruction and modernization of operating plants, as well as the elaboration of safety regulations, etc.

2.10 DEVELOPING COUNTRIES [36-42]

There were 24 nuclear power reactors with a total capacity of ~ 14 Gwe in operation in seven developing countries including: Argentina, Brazil, India, Republic of Korea, Pakistan, Yugoslavia and Taiwan, China (1986). There are 15 units under construction, with a total capacity of 9.5 GWe in countries including China, Cuba, the Islamic Republic of Iran, and Mexico etc. It is clear that in some developing countries there is a need for the development of nuclear power. But because of various reasons and constraints, i.e., insufficient trained manpower, inadequate infrastructures and economic and financial problems, the increase of nuclear power over the next 15 years still will be limited. The forecast shows that nuclear power capacity is expected in developing countries to rise to 36 GMe, only a 5.7% nuclear share of their electricity generation by the year 2000.

The development of nuclear power in Argentina and India will be still along the line of heavy water reactors incorporating advanced technologies. In particular, India is using the fuel cycle with thorium. But some efforts in Argentina point to advanced LWR technologies:

- With UNDP-IAEA support, an academically inspired research program in the field of tight lattice cores with high conversion ratio has been started: work is in progress in resonance treatment, homogenization models for cell calculations, and validation of nuclear data and codes.
- The basic engineering design and a preliminary economic feasibility study have been completed for CAREM, a 15 MWe modular LWR with minimum on-site installation work, passive emergency systems and automatic operation. Its primary circuit is integrated, self pressurized and natural convection driven. The development of different CAREM subsystems is under way.

In Korea there are now 6 PWRs (2 x 600 MWe, 4 x 950 MWe) and 1 PHWR (600 MWe) in operation that share over 50% of the total electricity generation, and 2 x 950 MWe PWRs are under construction, while another 2 x 950 MWe PWRs are in the design stage. The three 600 MWe plants as the first phase of nuclear power projects were constructed under the turn-key basis in the early 1970s. The ratio of domestic supply to the total project, which is usually called as a localization factor, in this phase was only about 8 to 14 per cent. Some domestic companies have participated in construction works as sub-contractors to foreign suppliers. Six 950 MWe plants, as the second phase of the project, have been carried out under the framework of the non-turn-key contract or the component approach. The localization rates reached about 45 per cent, mostly in the fields of architect engineering technology and equipment manufacturing technology. In order to effectively achieve self-reliance in nuclear power technology by the year 2000, the design of 2 x 950 MWe PWR nuclear steam supply system (NSSS) has been assigned to KAERI (Korea Atomic Energy Research Institute) with a foreign NSSS supplier. The Korea Nuclear Fuel Company (KNFC) is responsible for manufacturing and supplying all PWR fuel from 1989.

In Brazil, the nuclear programme is based on the full technology transfer within a long-term association with the partner of the Federal Republic of Germany. The means of technology transfer include the joint design and construction of a series of identical plants, the establishment of joint enterprises to execute this programme, training, transfer of the full technical information etc. As a result of this strategy, the construction of the first 2 x 1300 MWe Siemens type PWR, Angra 2 and 3 were started. Now 70% of the civil works of Angra 2 are concluded and the

preparatory site works of Angra 3 are ready. And 70% of the design is completed. However, due to the economic crisis in the 1980s, the programmme had to be slowed-down. The following plants, Iguape 1 and 2, on which work was started, were postponed indefinitely in 1983. The restart of construction of additional NPPs is not expected until the next decade.

China, through many year's efforts, has built up to some extent a nuclear industry and man-power resources. Long before the prototype 300 MWe Qinshan nuclear power plant was started to be constructed in 1985, its R&D programme had been carrying on since 1974. The programme consists of main items which are necessary for confirming and verifying the design, including reactor core physics, thermal-hydraulics, materials, fuel, and structure mechanism, etc. The capacity of manufacturing includes the following main components: steam generator, pressurizer, reactor internals and fuel assemblies. Meanwhile, foreign companies were invited to conduct consultations and some important equipment, such as the reactor pressure vessel, coolant pump were imported. The first unit of the 2 x 900 MWe Daya Bay power plant started construction in August 1987. It is planned to be completed in 1992, and in 1993 the second unit. The NSSS and Turbine generators are supplied by Framatome and GEC, respectively. Now at the Qinshan site it is planned to construct two 600 MWe plants. For this project, it is planned to perform design, component manufacturing, and construction domestically with incorporation of technology transferred from foreign partners. In Taiwan, China, it is being planned to place new orders for LWR power plants. In Southwest Center for Reactors (SWCR) a conceptural design of AC-600 (600 MWe Advanced PWR) was started in 1987, incorporating advanced reactor core, passive safety systems and simplification. In Beijing Nuclear Engineering Institute a feasibility study of SECURE-H for district heating of Qigihar City, Northeast China has been carried on together with the experts from ABB-ATOM. China will take a spent fuel reprocessing option. Since the middle of the 1970s, the R&D of reprocessing technology has been carried on. The conceptual design of a multi-purpose reprocessing pilot plant is under way.

3. LARGE SIZE ALWR DESIGNS (above 600 MWe)

3.1 THE N4 MODEL [43] (FRANCE)

The N4 model (1400 MWe), which is under construction on the CHOOZ site, is a continuous improvement of the P4 series (1300 MWe) and is the last generation of PWR in France (commercial operation in 1991). The plant cost per installed kW is 5% reduction compared to the P4 series. This reduction results mainly from the following evolutions.

3.1.1 Fuel Utilization and Core Configuration

The core power is increased by means of loading 205 Advanced Fuel Assemblies (AFA) instead of 193 fuel assemblies in a 1300 MWe plant. For Advanced Fuel Assemblies, the grids are made of Zircaloy 4 instead of Inconel 718. This allows a gain of about 0.04% on fuel enrichment and reduction of stagnant activity in the primary system. The top and bottom nozzles of the assembly can be removed to replace a failed rod.

For fuel economy, burnable absorbers and neutron reflector etc. are considered. For fuel management, the reloading pattern will be as for the other reactors of EDF by 1/4 of the core taking into account the increase of the burnup (more than 45 000 MWd/t), and the interest for EDF to keep the annual loading, because of the network consumption (low in the summer).

3.1.2 Load Follow Capability

For increasing load follow capability, a new control system called DMAX is selected. It involves five control rod banks (two grey banks and three black banks). The overlap length between two banks is controlled by the system, which simultaneously controls the average primary coolant temperature and the core axial offset. In this way, the operator action is no longer required during power transients. The control banks can compensate the reactivity variations of the xenon, therefore reducing radwaste during power transients. The position of the grey bank is no longer controlled by the turbine power signal, so reducing the interface between turbine and NSSS. The DMAX system allows automatic follow-up of load variation requests up to 5% of maximum power per minute. The new units have to enable frequency adjustment involving primary adjustment and automatic frequency control. The units will participate in the spinning reserve, when automatic operations are inadequate using available power reserves to support the grid. These load followings can be performed up to 70% of the fuel cycle length (boron control system design). The number of load following transients allowed in the unit life is 12 000.

3.1.3 Control Room

The new control room is equipped with the wide-scale integrated control and data display facilities, a high performance data processing system, which enables excellent coordination between the operation, the maintenance and periodic tests. In the control room, the control, in all circumstances, would be only achieved by computerized control and control display units. Conventional equipment would be limited to emergency controls (emergency shutdown, backup procedures). Programmable and self-testable controllers are used to receive, process and transmit on, off and analog signals. A multiplexed optical fiber communication network significantly decreases the number of cables.

The control and instrumentation system is provided with a two level structure. The first level provides the interface with the plant (data acquisition, command of actuators). By itself it carries out all the automatic protection actions and all the automatic regulation. This level animates the wall-mounted mimic panel and directly receives, from the control room, the manual orders for safeguard of protection actions and the command signals from the auxiliary control panel. All other commands (on/off and adjustments) are transmitted from the operator consoles to the first level via the second level. The second level also receives nearly all the data gathered by the first level. This second level, the "manager" of the operator consoles, supports all the dialogues, conducts elaborate processing on the partially processed data coming from the first level, and executes all the operator assistance and filing functions.

There are two identical, general purpose control stations, from which two seated operators can perform all control functions in all circumstances. One operator only is required in stable or low-disturbance conditions. From three visual display units, the operator can find out, at any time, the status and configuration on the centralized power plant control systems and the values of the main physical paramaters, can control the actuators and can select control procedures applying to the present situation of the unit and to the concerned system. The alarms, after being initially processed by the computer system, are displayed on four specialized visual display units. Then their processing is performed by means of three control visual display units.

One auxiliary station, known as the "observation station", allows other users to access the same information as the operators, but without accessing the controls. On a large passive mimic board, the main loops of the unit are represented with the main parameters in a highly simplified way. An auxiliary panel with conventional control and data display devices is provided in case of short-term failure of all the data processing units. In a room located near the control room, there is a fourth "observation-only" station designed for operating, test and maintenance personnel and, in times of crisis, for the local crisis team. The control and instrumentation system is shown in Fig.3.1.1.

PWR 1400 MW UNITS
CONTROL AND INSTRUMENTATION SYSTEM

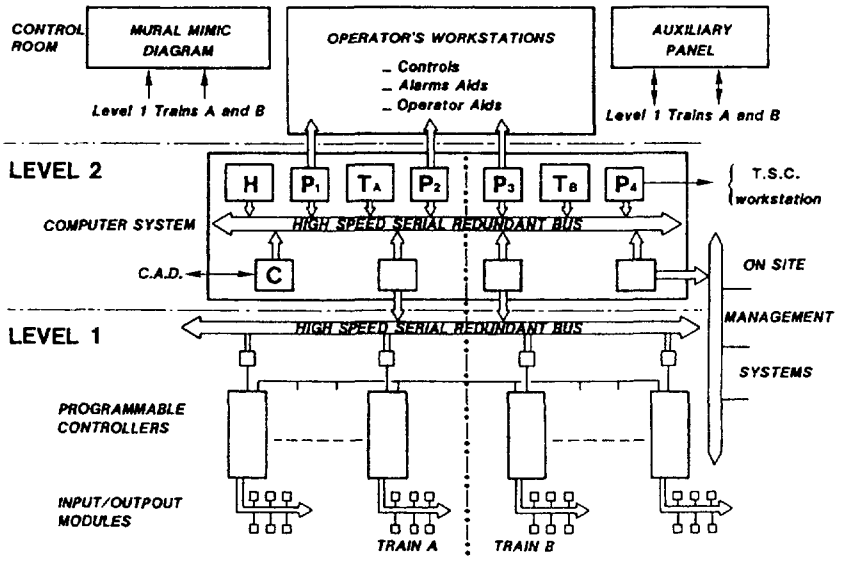

FIG.3.1.1. Control and instrumentation system.

3.1.4 Nuclear Steam Supply System and Turbine Generator

Reactor Vessel

The N4 model vessel is manufactured from hollow ingots which improves the material quality. The characteristics of the vessel shell material are improved reducing the initial transition temperature and decreasing impurities in Cu and P content, in order to increase margins at the end of plant life. The inside diameter of the vessel penetration tubes is reduced.

Steam Generator (Fig.3.1.2)

- Integration of an axial flow economizer provided with a feedwater-recirculating water mixing system,
- use of Inconel 690 as a tube material with the aim of reducing corrosion risks as well as nickel and cobalt looseness,
- selection of a tube bundle with triangular pitch which allows decreasing its volume while increasing the exchange surface (7300 m^2 instead of 6900 m^2 for P4),
- modification of the moisture separator design in order to make them more compact,
- measures making maintenance operations easier (Manway diameter raised to 450 mm, easier tube plate cleaning),
- layers tubing to avoid the problems of perpendicular wear on the anti-vibration bars.

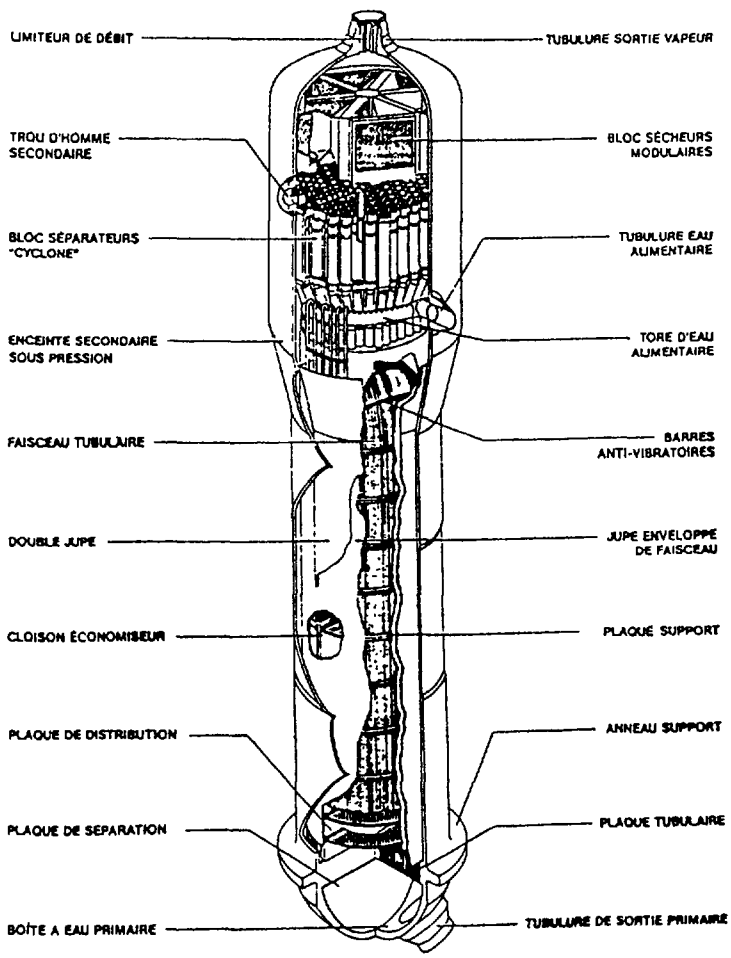

FIG.3.1.2. Steam generator.

These improvements result in a steam pressure increase of 72 to 73.3 bar going along with a reduction of weight and space required.

Primary Pump (Fig.3.1.3)

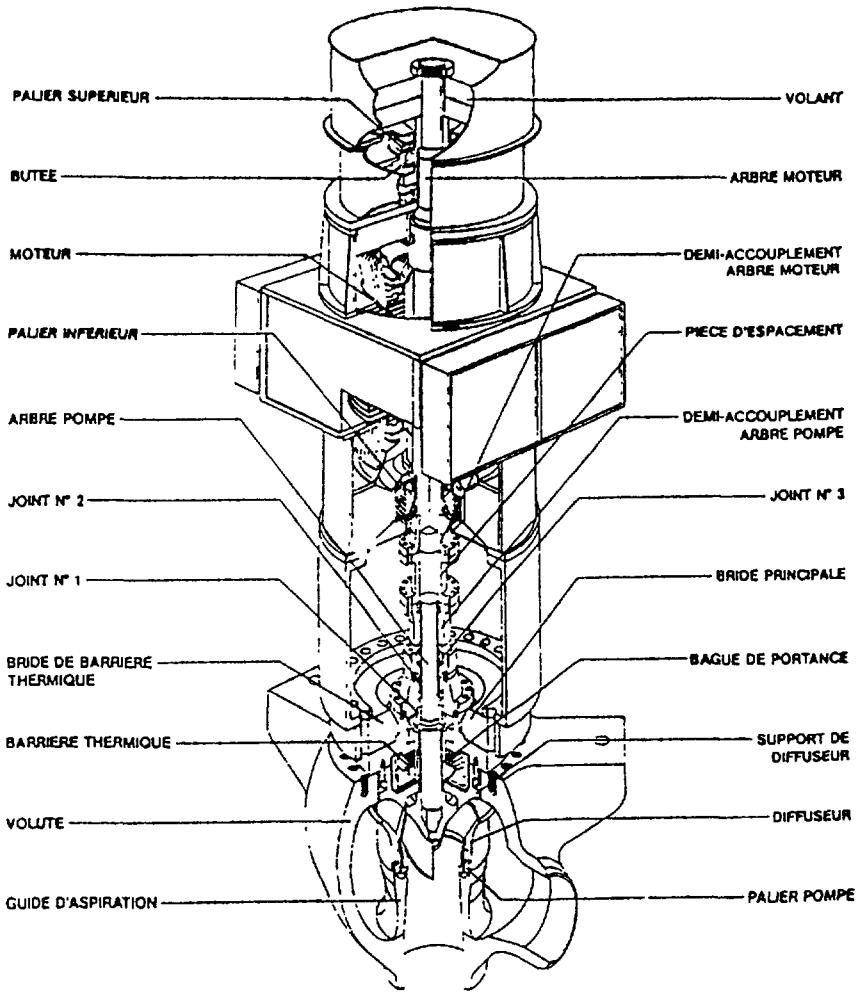

FIG.3.1.3. Primary moto-pump group.

Primary pump has following improvements:

- improvement of the pump compactness and efficiency (+ 2%) by means of a new hydraulic design (redesigned casing),
- use of a hydrostatic bearing, mounted around the impeller, which eliminates the pump shaft overhanging position, and thus reduces vibrations perpendicular to the shaft sealing joints,
- new oil pressure shaft coupling system,
- a thermal barrier with cooling coils of radial design,
- modification of the grade of the metal used for the shaft.

The new ARABELLE turbine was specially developed for N4 units.

It differs from the previous 1300 MW turbines by its compactness (reduced length and weight of respectively 10 and 15%), greater efficiency (+ 1%) and increased power (steam admission 8650 t/h at 71 bar instead of 7780 t/h at 69.5 bar).

The major technical innovations are the following ones:

- The turbine is of the impulse type, whereas those of the 1300 MW series were of the reaction type.
- The use of a single-flow HP-MP cylinder, instead of the single HP cylinder, involves a reduction of the dimensions of the three LP cylinders (the number of stages in these cylinders is divided by two).
- The outer shell of the LP casings and the cylinders of the turbines are completely independent; the shell is an extension of the condenser directly resting on the ground; it is connected to the cylinder by two flexible circular seals. As a result, the turbine is subject to no permanent or transient load by the condenser.
- The adoption of two bearings for each LP cylinder reduces the shaft vibration level.
- For higher performance, two two-stage moisture separator reheaters increase the efficiency of the turbine (+ 0.4%).

3.1.5 Balance of Plant

Nuclear auxiliary building: a complete new design linked to the new boron recycle system.
Fuel storage building: a new fuel storage pit liner design allowing radiography of welds.
Site radwaste building: a new design - all the site buildings presenting a potential contamination risk outside Nuclear Island have been gathered in this building (hot warehouses, hot workshops, washhouse, liquid and solid radwaste storage and treatment).
Boron recycle system: a new design without intermediate storage tanks. A boric acid evaporator is used for gas stripping.
Auxiliary feedwater system: two independent subsystems. Each subsystem includes a turbine-driven pump and an electric engine pump.
Chemical and volume control system: a throttling valve instead of letdown orifices.
Condenser circulating water system: the natural draft cooling tower efficiency has been improved by a gutter system that catches droplets before they can reach the ground level and by a more efficient design of air inlets.
Ventilation systems - are simpler than in previous projects.

3.1.6 Maintenance Conditions

Development of New Maintenance Equipment

- quickly set up closure plates for channel head of steam generators (light materials, foldable plates),
- wider steam generator manholes (450 mm instead of 400),
- steam generator cleaning equipment (slurry flushing),
- new multiple studs tensioner,
- fixed and mobile devices for in-service inspection.

Reduced Exposure of Operators

- implementation of a cold purification pump (reduction of the manSv inventory by 6%),
- choice of equipment with low activable product release rates (Inconel 690 for S.G. tubes, Zircaloy 4 for fuel grids, valve coatings without cobalt),

- improved surface conditions (pool coatings, S.G. channel heads),
- improved maintenance conditions owing to the development of high-performance tools and robots,
- improved building design and layout (for example: neutron containment in the reactor pit, Fig.3.1.4).

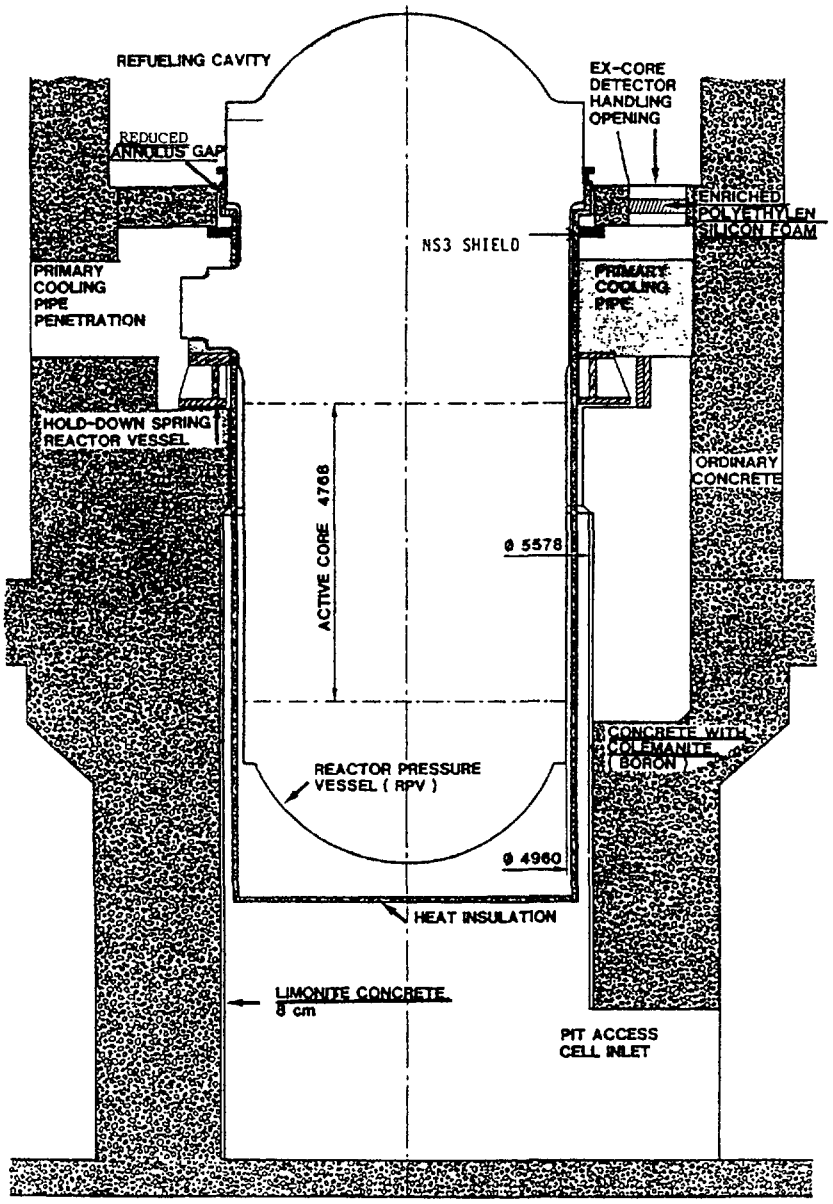

FIG.3.1.4. Chooz-B1 PWR reactor cavity.

3.1.7 Safety related improvements

These are:

- improvement of redundancy on the main components of the SG auxiliary feedwater supply systems and of the components cooling systems, since those systems are safety related and are frequently or permanently used;

- deeper knowledge of the physical phenomena occuring under incident or accident conditions associated with probabilistic studies in order to check the whole safety systems redundancy, reliability and coherence;
- improvement of the man-machine interface (control room);
- development of the main components in-service inspection methods.

3.2 CONVERTIBLE SPECTRAL SHIFT REACTOR (RCVS) [44-47] (FRANCE, FRAMATOME)

3.2.1 RCVS Concept

In the convertible spectral shift reactor (abbreviated "RCVS", for its French name) concept, the greatest flexibility of fissile material use has been sought. Thus such a reactor would be able to use not only uranium fuel, like conventional PWRs, but also plutonium fuel or mixed uranium and plutonium oxide (MOX) fuel. For a plutonium-fueled RCVS, the spectrum (Fig.3.2.1) designed favours plutonium 241 fissions and leads to an efficient buildup of this isotope, via the 1 eV resonance strong absorption of Pu-240. The plutonium 241, having a half-life of 14.7 years, is transformed into americium Am-241. Am-241 captures free neutrons to become Am-242, which, in view of the spectrum, is also an excellent fissile material.

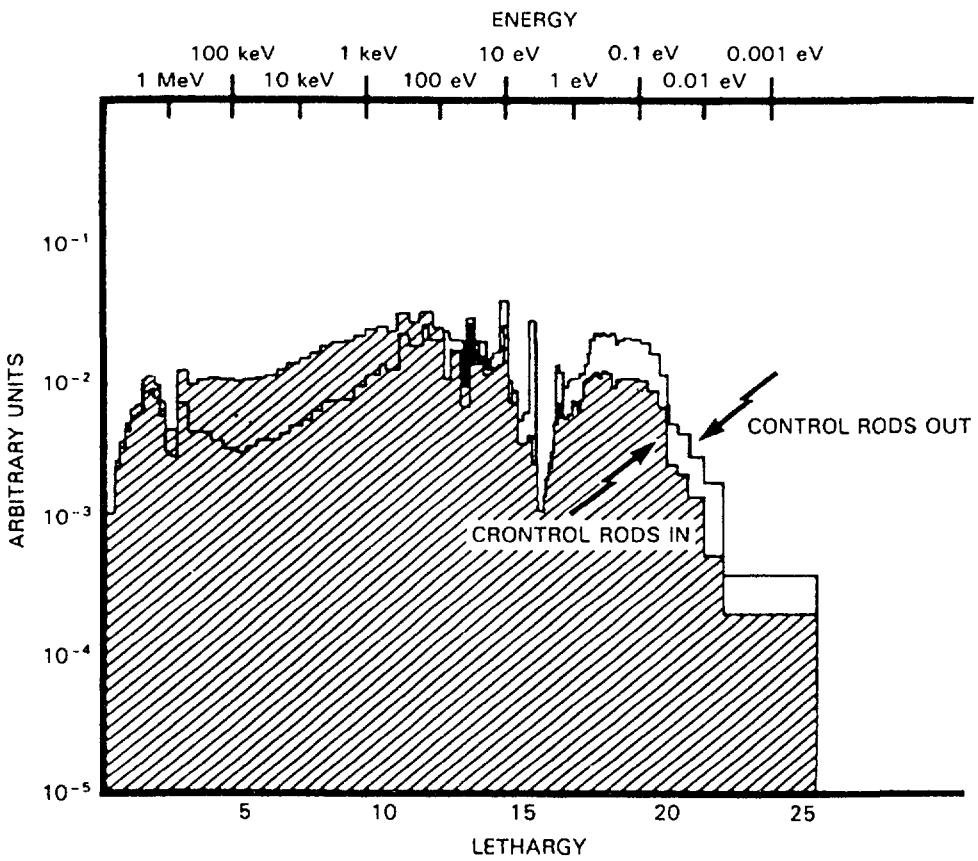

FIG.3.2.1. Absorption rate tilt produced by control rod insertion in the RCVS core.

Studies have confirmed that if the lattice pitch is reduced to give a moderator-to-fuel ratio of 0.6, it is then possible to achieve a conversion ratio greater than unity using plutonium fuel. But this type of lattice requires 8 to 9% high enrichment of fissile plutonium, so raising fuel costs. Safety studies further demonstrate that enrichment beyond a maximum

of 7.5% of fissile plutonium presents a risk of the reactor returning to criticality if the core is uncovered.

For the near-term goal, it is essential to use the same facilities for fuel fabrication and reprocessing as used for current PWRs. This constraint leads to the choice of the moderator-to-fuel ratio of 1.1, which implies a fairly low conversion ratio (around 0.8) and would drop the quality of plutonium. To counteract this, the reactor is provided with axial and radial blankets and a spectral shift system using fertile rod clusters. These features provide a conversion ratio of around 0.9 and also further reduce the enrichment required. For this purpose, RCVS uses the same components as current PWR models, apart from the core and associated equipment (Fig.3.2.2). Fuel rods are standard French PWR Zircaloy cladding with an outside diameter of 9.5 mm. The lattice pitch is very close to that of the present 17 x 17 array, but the fuel assembly structure has been changed to a hexagonal lattice (Fig.3.2.2, 3.2.3). With the plutonium (MOX) core, the moderator-to-fuel ratio Vm/Vf is about 1.1. In the uranium core, a number of fissile rods have been replaced by water-filled Zircaloy tubes having the same outside diameter in order to achieve Vm/Vf of about 2 and keep the same hydraulic condition.

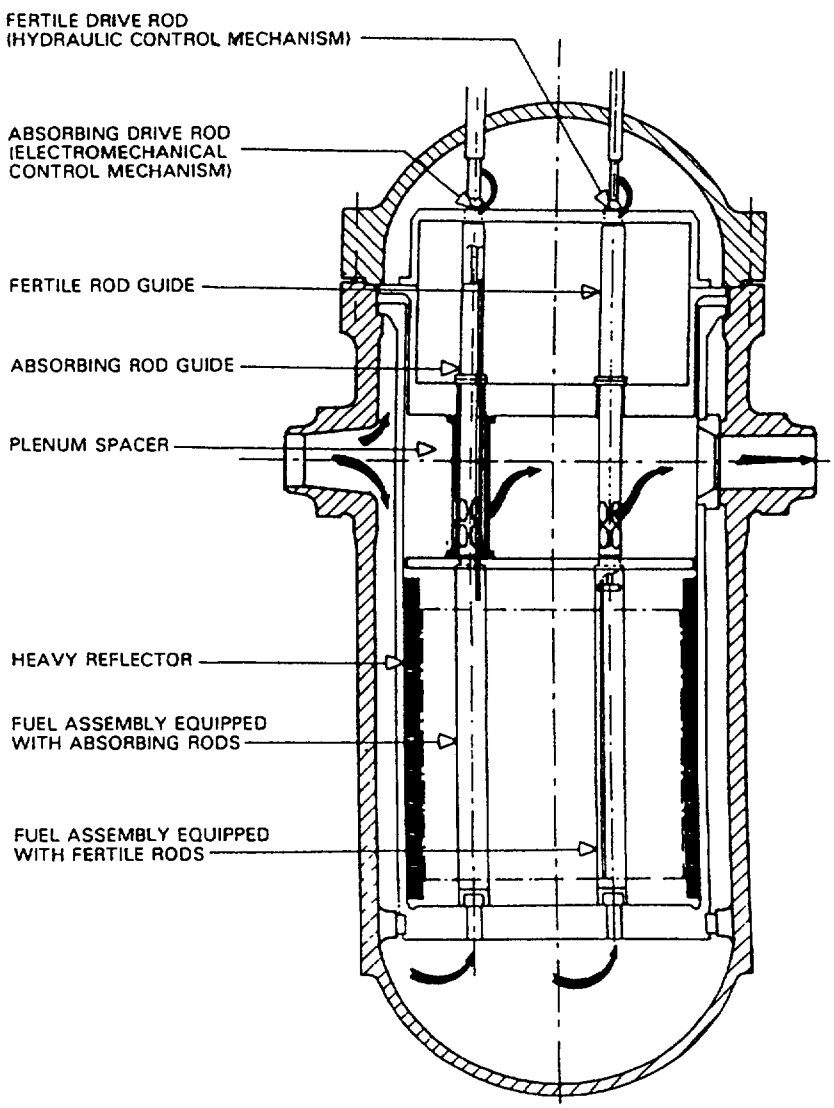

FIG.3.2.2. Simplified longitudinal cross-section of the RCVS reactor.

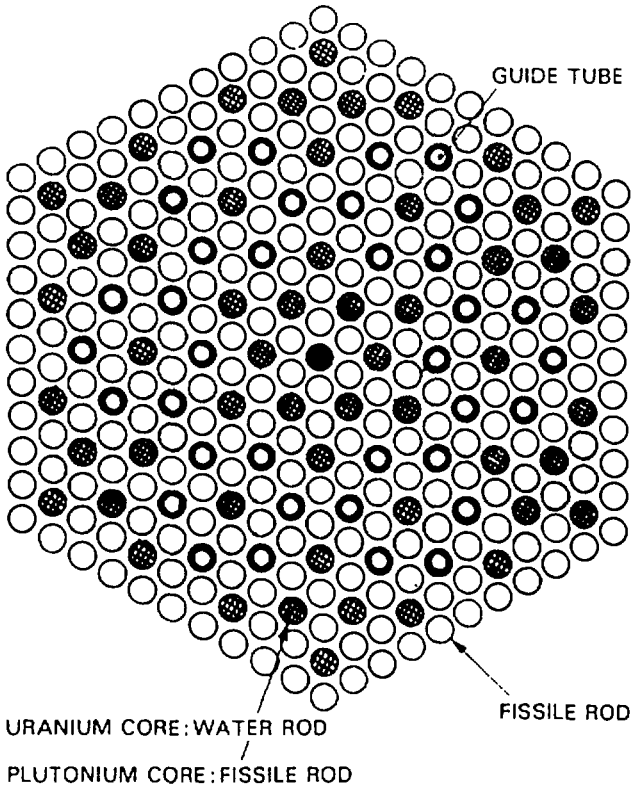

FIG.3.2.3. Transversal cross-section of the RCVS fuel assembly.

Spectral shift rod cluster control assemblies consist of fertile depleted uranium rods. They are inserted into the core at the beginning of the cycle in order to harden the energy spectrum of the neutrons. Plutonium is generated in these rods. As the fuel burns up, rod clusters are withdrawn in sequence. This system allows Vm/Vf to be varied as follows:

	Vm/Vf with rods inserted	Vm/Vf with rods removed
Plutonium Core	1.10	1.36
Uranium Core	1.65	1.98

Around the core, a heavy stainless steel reflector can be installed to reduce neutron leakage and limit exposure of the reactor weld area. For the uranium core, in order to obtain a mean discharge burnup of 45 000 MWd/t, an initial enrichment of 3.25% is required (4.2% for current PWR). In this case, there is a gain of 25% with regard to natural uranium consumption and 21% with respect to the fuel cycle cost. The results encourage to envisage a burnup of 60 000 MWd/t. In this case, the gains in uranium consumption and fuel cycle cost would amount to 33% and 27% respectively.

For a plutonium core, to achieve a mean discharge burnup of 45 000 MWd/t for mixed plutonium-uranium fuel, an initial enrichment to 5% of fissile plutonium is required. Under these conditions, the cycle cost for this type of core is 25% less than for a current PWR. If the discharge burnup is pushed up to 60 000 MWd/t, enrichment has to be raised to 6%. The total drop in cycle cost is 30%. In both cases, the plutonium generation ratio is 0.98. A thermal-hydraulic study of the core shows that the DNB (Departure from Nucleate Boiling) ratio for this type of reactor differs

little from an ordinary PWR. This ratio can be improved by using mixing grids. A loss-of-coolant accident study shows no specific difference from the standard PWR.

3.2.2 Safety Analysis

For RCVS core two particular safety aspects have been concerned.

3.2.2.1 Voidage Coefficient Analysis

The void coefficient (and also moderator temperature effects) can become positive if the Pu content is too high. This void coefficient in fact results from the cancellation of large positive and negative capture and fission cross section contributions. The analysis shows that with an enrichment lower than 6% of fissile plutonium, the total voidage of the core would provide overall negative reactivity.

3.2.2.2 LOCA Analysis

The RCVS design leads to specific problems in case of a loss of coolant accident (LOCA). The use of a hexagonal matrix, even if its pitch is on the same order as that of a PWR, increases the pressure loss of the core. It is thus necessary to demonstrate that safety in case of a LOCA is not threatened by such a change. The analysis show that the evolution of the cladding temperature during reflooding is unfavorable for the RCVS. As compared to a Model N4 NSSS reactor, at the end of decompression the maximum cladding temperature is about 300°C lower in the RCVS. However, this advantage is lost during the reflooding phase, and at the end the maximum cladding temperature attained is on the same order of magnitude.

3.2.3 Research and Development for RCVS

3.2.3.1 Core Physics

For undermoderated lattices with spectra between those of PWRs and FBR, most fissions and neutron captures arise in the epithermal range where data are not well known. For adaptation of computer codes, the major points are a new version of cross section data library, improvement of resonance self and mutual shielding calculation and implementation of a specific module for hexagonal collision probability calculation. Analysis has shown the importance of the first resonance self shielding for plutonium isotopes 240 and 242. It was also necessary to modify the Pu-242 first resonance parameters. The computer codes for cell and rectangular or hexagonal assemblies are under development.

An extensive experimental programme is being carried out in order to reduce the uncertainties on the different neutronic parameters, which include:

- core parameter studies in tight lattice,
- capture cross-section measurements on main heavy nuclides,
- total fission product cross-section measurement.

3.2.3.2 Thermohydraulic Studies

The Thermohydraulic programme has been built in order to fullfil the lack of data in the three following points.

- Boiling crisis in rod bundles with triangular array of different pitches with and without unheated rods; these coefficients are used

in two-phase flow to compute the local conditions for boiling crisis data.
- Reflood heat transfer and quench front progression in tight lattice fuel assemblies; preliminary reflooding experiments at imposed inlet flow rate have shown that tight lattice cores are more difficult to be cooled than standard PWR ones. An effort would then be useful which could consist in improving the system effect so as to get more liquid flow rate entering the core or in increasing core heat transfer during the refilling phase.
- Coolability of fertile rods inserted in guide tubes by water circulating in a narrow gap; up to now the tests show that the boiling crisis is not dangerous for the cladding of the fertile rod.

These programmes have been performed in the Thermalhydraulic Laboratory of the Nuclear Research Center of Grenoble.

3.3 THE CONVOY PLANTS (PWR 1300) [48,49] (FEDERAL REPUBLIC OF GERMANY)

3.3.1 The Convoy concept

The Convoy plants are a group of three plants with PWR of the standard size for Germany of 1300 MWe (net), in the Federal Republic of Germany, which are presently under construction almost in parallel at three sites in the FRG, for as many utilities. These nuclear power plants are a continuous development from the precursor projects of the same unit size, such as Philippsburg 2, Grohnde and Brokdorf, the former 2 being commissioned in 1984 and the latter in 1986. The Convoy concept was established in 1980. The advanced features of the Convoy concept lie in the field of the engineering and project management associated with nuclear power plant construction. The concept features:

- detailed preliminary planning prior to commencement of construction,
- reduction of the engineering effort per plant,
- streamlining of specifications and procedures,
- sharing of tasks between Authorized Inspection Agencies,
- economical manufacture of large numbers of identical components,
- rationalization of licensing procedure.

The concept also included reorganization of the specifications to differentiate between different requirement categories, to adapt quality control measures, to suit the manufacturing process and to reduce the amount of documentation. Three partial construction permits and one operating licence were envisaged for the licensing procedure. The first partial construction permit was to cover the concept and the civil engineering part, the second the entire mechanical and electrical part and the third the initial loading of the core.

For a series of successive nuclear power plants, the procedure provided for uniform planning using identical software and hardware for all site-independent areas of the plants. In the process, the planning work was to be done sufficiently early to ensure that the partial construction permit for all the mechanical and electrical systems could be issued before the commencement of erection work. This approach made it possible to reduce the amount of engineering manhours required and to stabilize prices by placing large orders for components of identical design. Fig.3.3.1 shows the degree of standardization of the Convoy plants, which are subdivided into a standard and a site-specific part. Most of the site-specific facilities concerns the cooling water systems and the connection with the power grid, where the differences are unavoidable.

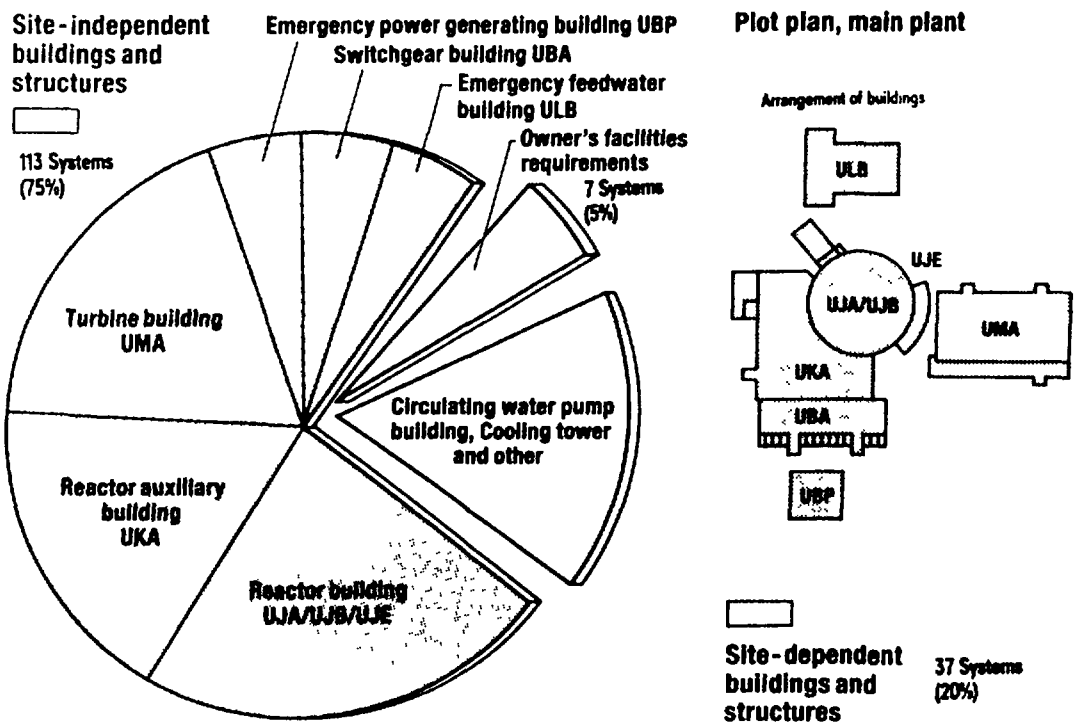

FIG.3.3.1. Degree of standardization of Convoy plants.

Sharing of tasks between Authorized Inspection Agencies means that a specific aspect of the identical design for the main plant buildings and systems was reviewed and approved by one of the Inspection Agencies participating in the Convoy licensing procedure, and this approval was accepted by the other Inspection Agencies. The special conditions, stipulated in the construction permits for the mechanical, electrical and instrumentation and control systems, are reduced to less than 10% of those for earlier plants. Those conditions imposed usually require changes to the original plans and result in additional costs or delays in construction. The reduction of such conditions is an impressive demonstration of the success of the Convoy concept.

Planning for pipe routing in the reactor building was not only considerably shorter for Convoy plants than for earlier plants, but was also practically completed when construction began. The very comprehensive and detailed planning was accompanied by continuous quality control. For example, the arrangement of components, pipework, cables and ventilation ducts in the buildings were planned using models on a scale of 1 : 25. Finishing work such as framework removal, laying of floor topping, which were previously planned as a whole, were now broken down into individual activities with detailed time scheduling and performed immediately after completion of the concrete. The prefabrication of piping is increased, for example, in the reactor coolant lines, 9 of the 15 welds per loop are shop welds. An additional aid was the survey data for all the anchor plates and their actual points of attachment to the building structure in the main buildings prior to commencement of the actual erection activities. In this way the construction time for a 1300 MW PWR Convoy plant could be reduced to approx. 60 months.

3.3.2 Technical development of Convoy plants

The technical development of Convoy plants focused on design details and optimization of plant and building layout. The reactor building annulus (space between the spherical steel containment shell and the outer concrete structure) was enlarged by 4 m in diameter in order to rearrange the mechanical equipments and obtain physical separation of redundant components and systems, fire protection, better accessibility and maintainability. The reactor auxiliary building interior was redesigned to improve accessibility for inservice inspections and maintenance etc. In the turbine building the arrangement of the filters and piping have been optimized to reduce corrosion-product ingress into the steam generators.

For reactor pressure vessel the number of circumferential welds could be reduced from eight to five and longitudinal welds are abandoned. A 100% inservice inspection of RPV could be performed within five days. The reactor core internals are welded compared with the previous design in which the different parts are connected by screws. The design improvements of steam generator led to increase in the weight of the SGs by about 20% from previous plants to Convoy series with a higher design pressure on the secondary side. The reactor coolant pumps use forge casings. The sealing system consists of three independent seals, one of them is a stand still seal which prevents small leaks even in the event of failure of the seal water supply. The reactor coolant lines were completely prefabricated, only the connecting welds to the primary components have to be performed on site. The introduction of the leak before break criterion allowed to eliminate the need for pipe whip restraints. The steel containment is constructed from material 15 MnNi63 with improved weldability. The containment is designed to contain the maximum pressure which can arise under accident conditions. The containment is divided into the operating compartments which are accessible during reactor operation, and the plant compartments which are not accessible during reactor operation. It also contains the spent fuel pool. The polar crane manipulates the spent fuel transfer casks in principle allow the replacement of major components, including steam generators.

Emergency core cooling and residual heat removal systems have 4 trains redundancy. Each loop is equipped with two accumulators, one of which feeds into the hot and one into the cold leg. Each loop has its own borated water storage tank. In addition to the main feedwater pumps there are total of 6 pumps available for delivering feedwater, which can be driven by the station service power supply and by the diesels. Therefore the feedwater supply has an extremely high reliability.

The special features of instrumentation and control systems are 30-minute-criterion and limitation system. The 30-minute-criterion calls for all actions necessary after the reactor protection system has responded to run automatically for the first 30 minutes. A limitation system intervenes before the reactor protection system response in order to return the reactor to normal operation condition. It is only if this limitation system fails to prevent the reactor that the reactor protection system takes over. A significant improvement in the supply of information to the operators is the process information system PRINS which went into operation for the first time in the Convoy plants. This system makes large-scale use of full-graphic-capability VDUs (video display units) which can be termed an "expert system" incorporating a data base (signals, computer results), a knowledge base (information goals, plant and computing functions) and an inference "engine" which reasons with this knowledge. It allows both optimization of operation and the detection at an early stage of small deviations.

3.3.3 Safety Aspects

For Convoy plants the safety goals and requirements are identical to those of the pre-Convoy plants. However, experience from TMI and the German Risk Study was utilized to perform specific improvements in a number of areas. These consisted in particular of measurement of the coolant fill level in the RPV, the display in the control room of at-a-glance information on the subcooling margin in the reactor coolant line, and installation of systems for limiting the hydrogen concentration in the containment after a loss-of-coolant accident.

The leak-before-break criterion was introduced for the piping of the pressure retaining boundary and of the main steam and feedwater lines. Introduction of the "Basic Safety Concept" philosophy has been a major influence of the compilation of the specifications valid for today's Convoy plants. Under the heading "basic safety", the components of the safety-related systems were subjected to a series of improvements in terms of mechanical design, material selection, stress limitation, quality assurance and ease of inservice inspection. In order to protect the containment integrity in case of core melt accident a pressure relief facility with filter system was installed.

3.4 THE SIEMENS 1000 MWe THREE LOOP PWR [50-52] (FEDERAL REPUBLIC OF GERMANY)

The Siemens 1000 MWe Loop PWR design was derived from the four-loop plant operating in the Federal Republic of Germany. The plant power range chosen is the most common one. The new plant follows closely internationally applied safety and licensing practices, while conforming to the basic German safety regulations and design criteria. The plant design suits a number of international proposed sites or can easily be adjusted to the requirements of the particular local conditions. The main parameters of the plant are listed in Table 3.4.1.

3.4.1 The Core Design

The reactor core is made of 177 geometrically identical fuel assemblies in a 18 x 18 - 24 square configuration. In the first core part of the excess reactivity is compensated by Gd_2O_3 as burnable absorbers. The Gd_2O_3 fuel rods contain natural uranium as a carrier over their entire active height. A flat power density distribution throughout the first core is attained by using fuel assemblies with three different enrichments. The axial power density distribution is flattened by the use of burnable absorbers which do not extend to the upper and lower ends of the active core. A flat power density distribution can be maintained not only at constant-load operation, but also during load-change operation.

For fuel management, an in-out strategy is preferred. In this case, the use of gadolinium oxide is particularly advantageous because it burns out completely during its first residency period. Separate waste management for the absorber rods is avoided as Gd2O3 is homogeneously mixed with the fuel of several fuel rods. The improvement in neutron economy brought about by in-out fuel management increases the equilibrium cycle length by up to 20 full power days, the savings in reload enrichment amounts up to 0.15 wt% U235.

The power density distribution is monitored by the incore instrumentation. Two independent systems, the aeroball system and the fixed-position self-powered detectors, are provided. They support and complement each other. A process computer prints a complete

Table 3.4.1
THE MAIN PARAMETERS OF THE PLANT

Power	
- Thermal reactor output	3086 MW
- Thermal steam generator output	3103 MW
- Net electrical output	990 MW
Primary Containment Vessel	
- Inside diameter	53 m
- Design overpressure/temperature	4.9 bar/145°C
Reactor Pressure Vessel	
- Inside diameter cylindrical shell	4878 mm
- Wall thickness of the cylindrical shell	245 mm
- Design pressure/temperature	176 bar/350°C
- Weight without internals	430 t
Reactor Coolant System	
- Fuel	Sintered UO_2
- Number of assemblies	177
- Fuel rods per fuel assembly	300
- Overall length of fuel rods	4182 mm
- Active length of fuel rods	3400 mm
- Outside diameter of fuel rods	9.5 mm
- Overall in-core uranium weight	82.3 t
- Number of coolant loops	3
- Reactor operating pressure	158 bar
- Coolant inlet temperature	293.8°C
- Coolant outlet temperature	327.6°C
- Coolant flow rate	15 876 kg/s
Steam generator	
- Number	3
- Height	21 500 mm
- Diameter	4812 mm
- Tube material	Incoloy 800
- Design pressure/temperature	87.3 bar/350°C
- Overall weight	430 t
Reactor Coolant Pumps	
- Number	3
- Design flow rate	5292 kg/s
- Motor rating cold/hot	9870/7320 kW
Pressurizer	
- Height	13 800 mm
- Diameter (inner)	2200 mm
- Volume	45 m^3

three-dimensional image of the power density distribution from approx. 800 measured values within 10 minutes of completion of aeroball measurement. There is on-line continuous DNB surveillance with the core protection system (CPS). The CPS safeguards a DNBR dependent power limit. The main advantage gained from the use of the core protection system is that both core surveillance and fuel management apply the same design parameter: DNBR. The core protection system and fuel management together meet the stringent requirements associated with the DNBR safety limit, yielding a sufficient increase in the DNB margin to permit implementation of full low leakage fuel patterns.

With fuel assemblies of the type 18 x 18 - 24 a high maximum local burnup is attainable. As a result, long operation cycles up to 18 months and high reload burnups can be achieved, thus minimizing the number of reload fuel assemblies and, as a consequence, also the power generation costs. After excess reactivity is exhausted, the reactor can either be shut down for refueling, or it can run continually at reduced power in the stretch-out operation mode.

The potentially most important technological limitation on design burnup in modern PWRs with high thermal hydraulic efficiency would appear to be waterside Zircaloy corrosion. With this in mind, a model for corewide analysis of waterside corrosion was developed by Siemens which takes into account plant parameters as well as individual fuel rod power histories. The very sophisticated 3-dimensional code system permits local oxide layer thickness to be evaluated for each fuel rod and then utilized as a special optimization parameter.

3.4.2 Load Follow Capability

The Siemens PWR plants have demonstrated their load following capability and the possibility for frequency control. The unrestricted load follow capability constituted a fundamental design criterion for German NPPs from a very early stage in the development of the nuclear programme, this applies to all parts of the nuclear steam supply system, particularly for

- primary and secondary system engineering, inclusive of the turbine generator unit,
- instrumentation and control systems,
- mechanical components,
- nuclear auxiliary systems.

Attention was also paid to core monitoring systems and to reactor controls, as these provide a major contribution both to load follow capability and to economic fuel utilization. The PWR plants feature an Integrated Power Control and Reactor (Core) Limitation and Protection System (Fig.3.4.1). The load follow operation can be performed in an entirely automatic manner from the control room where the operator simply selects the desired ramp and the power level to be reached. Integrated monitoring and control systems assure that the plant remains within its technical specifications at all times. For the case of a loss of generator load followed by a turbine trip the plant can be brought again to full power in about 30 minutes. A further ability is to change over to part load operation instead of plant trip in the event of faults within the power plant (e.g. main coolant pump trip).

For the reactor controls, the control assemblies (CA) and boron poisoning in the coolant form the final control elements. The Siemens control assemblies (CA) management scheme in which there is only one type of

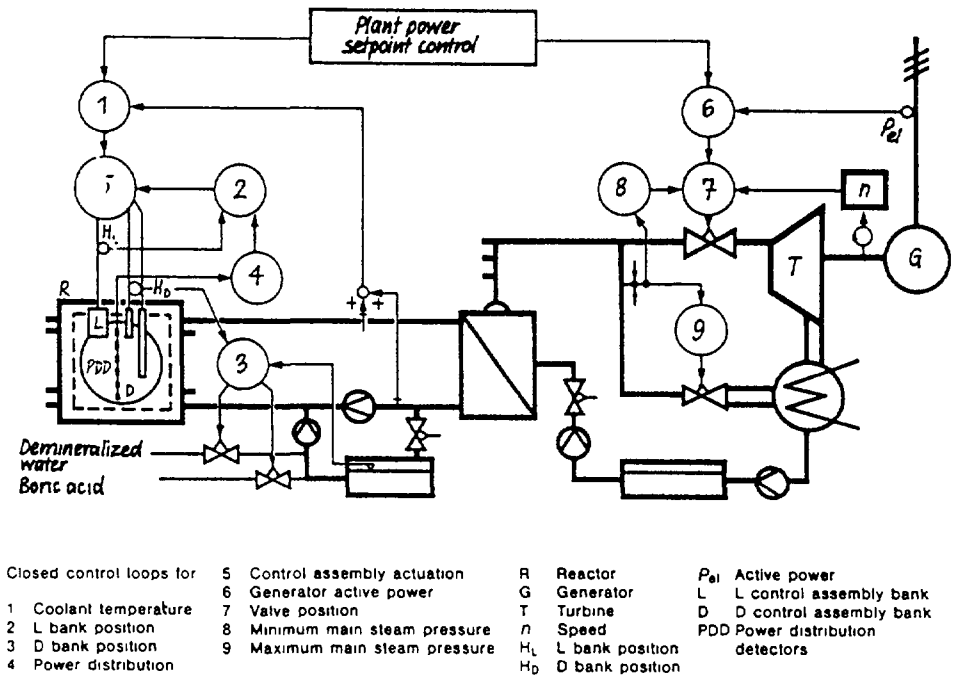

FIG.3.4.1. Block diagram of the power control systems of a KWU nuclear power plant with pressurized water reactor.

CA, is much less complicated than the other type of concept (Fig.3.4.2). In functional terms, the CAs are grouped into two banks. The weak (reactivity worth) D-bank is preferably used to control integral reactor power and the strong L-bank is used to control the axial power distribution. The L and the D-bank move in opposition to each other, such that their effects on total power cancel out. Operating experience has shown that the Siemens control concept does not require the use of grey CAs.

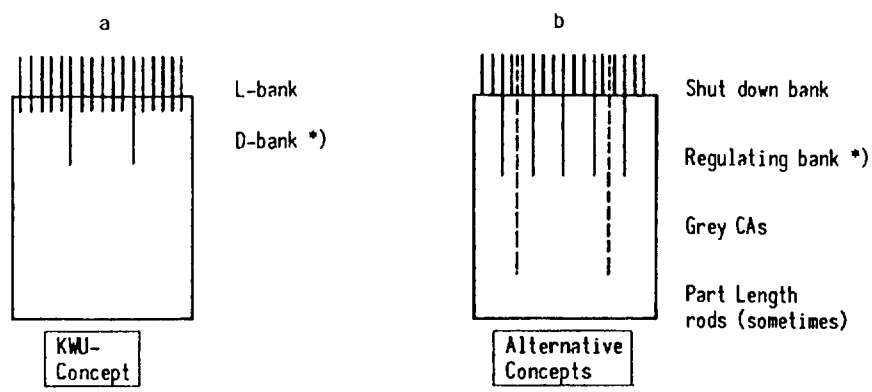

*) D-bank and regulating bank consist of a number of sub-banks which are inserted in sequence with decreasing power

Bank = Group of CAs moving together to perform specific tasks

FIG.3.4.2. Control assembly (CA) configurations for upper power range.

In order to handle the transient condition during the load following operation, the Siemens PWR plant has a unique feature of a three-stage core control and protection system. Any parameter subject to design or safety limits, such as peak local power density, is normally kept within a certain "control band" by the automatic control system. If the limits are exceeded, redundant core protection systems (known as "limitation systems" automatically bring the parameter back into the control band without interrupting operation. Only if the control and the limitation systems fail to handle the transient condition does the automatic reactor trip system come into play. This kind of control and limitation with graded countermeasures is applied on both global core parameters (nuclear and thermal-hydraulic limits) and local power densities in the upper and lower part of the core (limits on peak power density, departure from nucleate boiling (DNB) and pellet clad interaction (PCI)). The local core protection and control systems use signals from in-core detectors. The global core protection functions mainly use signals from the out-of-core instrumentation.

For new plants, an additional redundant automatic limitation function, which protects the fuel against unacceptable local PCI loads during severe transients, is equipped. The maximum allowable power density with respect to PCI is calculated by adding the actual preconditioned power and a given value for the overshoot allowance. The result is a "sliding PCI limit". The sliding PCI limit is an integral part of the automatic power density limitation system and is set in parallel with other limits, such as DNB and LOCA limits. The great advantages of this system are that not only is the core protected against PCI risks, but also the operator is completely relieved from PCI-related core surveillance tasks.

3.4.3 Improvements of Systems and Components Design

The improvements of system and component design are aimed at increasing the plant reliability and availability bases on all the experience gained from the operating plants. The number of valves and the length of tubes have been optimized in the sense of easy operability and maintainability and economic viability of the entire plant. These factors also have been considered for the design of the instrumentation and control system and the number of electric drives. The main systems and components have been left unchanged.

The reactor building is constituted as double containment. The reactor vessel is made of forged rings to eliminate axial welds at the reactor beltline region where radiation fluence is high, and to minimize in-service inspection.

3.4.4 Safety Systems

In accordance with the requirements of the Guidelines of the German Reactor Safety Commission for Engineered Safety Systems, the following design principles are applied:

- redundancy, diversity, general avoidance of interconnected systems, physical separation of redundant trains,
- fail-safe operation of systems during failure of subsystems and plant components.

An (n + 2) redundancy is adopted, where n is the number of engineered safety trains. This (n + 2) redundancy ensures that even in the event of a single failure and one train being out of operation for maintenance, the full capacity of the safety system concerned is available.

By analogy with the 1300 MWe Standard PWR (four-train safety system, one train being connected to each of the four loops), the 1000 MWe three-loop design is provided with three-train engineered safety systems which are connected to each loop without interconnections. This three-train safety system design also complies with the (n + 2) redundancy requirement.

Protection against failures caused by events such as fire or flood is achieved by the redundant trains of a safety system being physically separated from each other or structurally protected. The redundant and physically separated arrangement of the trains is also applied to their emergency power supply, the necessary auxiliary systems and the actuation of their functions by the safety-related instrumentation and control. This ensures a high reliability of the engineered safety systems.

Pipe break philosophy

In accordance with the requirements of the Guidelines of the German Reactor Safety Commission, quality assurance measures are taken to ensure that only subcritical leaks can occur in reactor coolant lines (maximum leak cross section equivalent to 0.1 A). Examples of such measures are as follows:

- use of high-quality materials, in particular with respect to ductility,
- conservative limitation of stresses,
- prevention of stress peaks by way of optimized design and construction,
- assurance of the application of optimized manufacturing and testing techniques,
- knowledge and assessment of faulted conditions,
- consideration of the coolant quality.

This leak postulate forms the design basis with respect to the load assumptions for reaction and jet forces on pipes, components, component internals and buildings.

A leak cross section corresponding to an area equivalent to a double-ended pipe break (2 A) is postulated for the design of the emergency core cooling system, for determination of the containment design pressure as well as of pressure gradients inside the containment.

3.5 HIGH CONVERTOR REACTOR (HCR) [53, 54] (FEDERAL REPUBLIC OF GERMANY)

Siemens has for many years pursued the following important objectives for improving fuel element and core design as well as fuel management procedures:

- reduction of fuel cycle cost by increasing the average fuel discharge burnup up to 50 MWd/kg, improving fuel utilization using advanced fuel element design and fuel management strategies, e.g., applying gadolinium burnable absorber and all-zirconium fuel elements in low-leakage fuel management procedures,
- enhancement of operational flexibility by designing the core for a flexible fuel cycle length up to 2 yr, stretch-out capability, and load-following capability,
- improvement of fuel utilization by recycling reprocessed plutonium and residual uranium, 20 000 plutonium rods having been irradiated to local burnups exceeding 50 000 MWd/t.

Various measures have been proposed to improve fuel utilization in present PWRs having a standard fuel rod lattice and being operated in the once-through cycle mode (APWR). The most effective ones for an interim step are:

- reflector improvements,
- use of hydraulically driven spectral shift displacement rods,
- application of low-leakage management strategies in combination with the use of burnable absorber.

However, all these suggestions, even if applied in combination, will not bring about an ore savings effect exceeding approximately 20%. Therefore, a logical and natural development of the standard PWR for achieving a really substantial ore utilization is a Light Water High Conversion Reactor (LWHCR). The essential advantage of a high converting reactor is the first one, namely to use as much as possible the basic and proven design and construction principles and operation experiences gained over several decades. All the components except core, core internals and closure head will be the same for the LWHCR and the PWR. Timely commercial introduction of a HCR would be decisively facilitated if a standard PWR could be converted into a HCR.

If the above mentioned constraints can be met, it is virtually assured that capital cost can be kept in the range 1-2% in excess of that for a conventional PWR. This is a necessary requirement for the commercial viability of the HCR.

The design objectives for HCR are:

- thermal power (HCR) = thermal power (PWR),
- conversion rate greater than or approximately 0.9,
- discharge burnup up to ~ 70 MWd/kg for the long-range target, using stainless steel fuel rod cladding,
- void reactivity feedback as to meet all licensing rules of the German reactor safety commission,
- coolability in the operation mode and in emergency cases,
- reduce the fuel cycle cost approximately 10%.

Table 3.5.1 shows preliminary core design data and Fig.3.5.1 shows the reactor core and control assembly in comparison with those of a standard 1300 MWe PWR.

TABLE 3.5.1
HCR CORE DESIGN DATA

	Homogeneous HCR	PWR
Thermal power, MW	3765	3765
No. of fuel assemblies	349	193
Pin diameter, mm	9.5	10.75
p/d	1.12	1.34
Lattice	triangular	square
Fuel assembly shape	hexagonal	square
Type of spacer	helical fins	grids
Active height (m)	2.1	3.9
Average linear heat rating (W/cm)	160	207
Power density (kW/L)	151	93
Average water-fuel volume ratio	0.52	2.06
Average reload enrichment, wt%	~ 7.5 +0.2	> or ~ 3.3

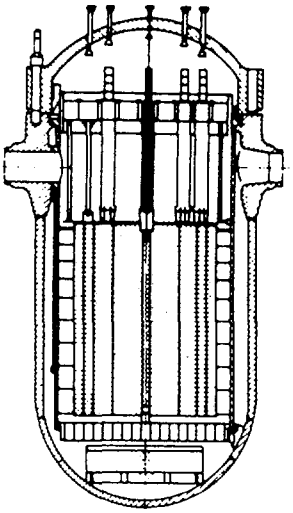

PWR

193 Fuel assemblies
61 Control assembly positions

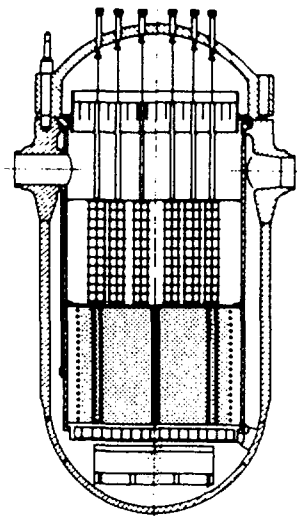

KHCR

349 Fuel assemblies
151 Control assembly positions
61 Drive mechanisms

Limited modifications

core
vessel internals
pressure vessel lid
pump impeller

additional investment cost for adaptation of a standard PWR to a KHCR

1 - 2 % of the total investment of a PWR

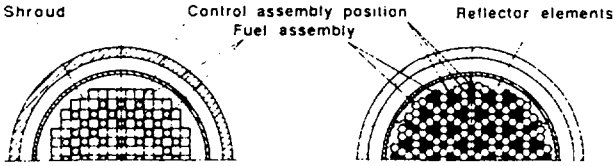

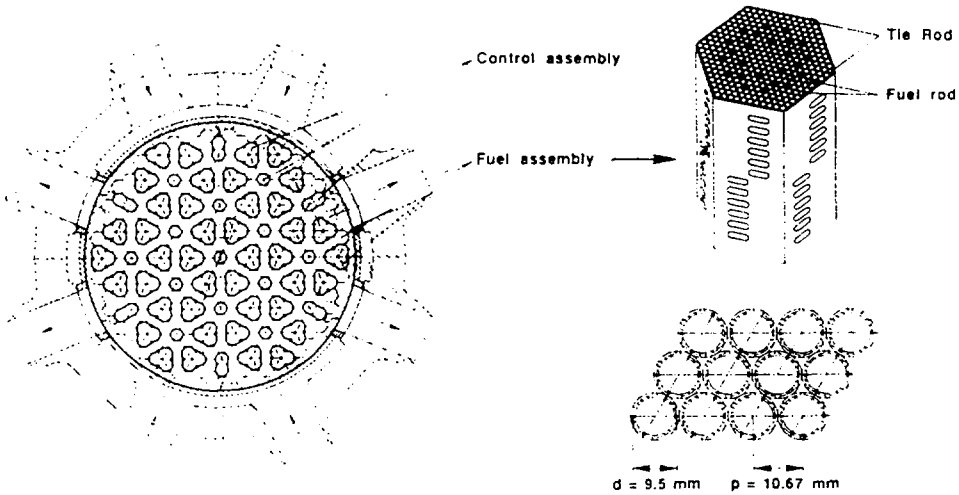

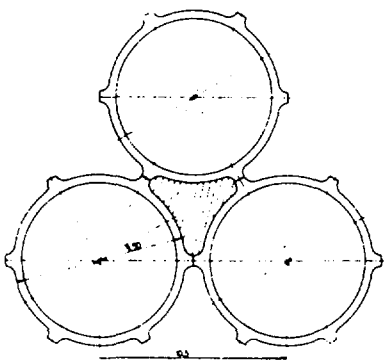

FIG.3.5.1. Reactor core and control assembly.

Since the water-to-fuel volume ratio is decreased from 2.06 to approximately 0.50, a fissile enrichment of roughly 7-8% Pu_{fiss} and/or U-235 leading to a fissile inventory of nearly 9 metric tons for a 1300 MWe PWR plant is required. A homogeneous fuel assembly design is currently preferred over a heterogeneous seed and blanket concept due to the higher degree of affinity to the proven fuel technology of the standard PWR. It is well understood that the degree of safety, reliability and economic performance achieved by current LWRs is a standard that has to be maintained or even exceeded with any new reactor type: Safety relates to both temperature and void reactivity effects and to heat removal during normal operation and anticipated operational occurances, as well as in postulated loss-of-coolant accidents.

Although the HCR can be based to the highest possible extent on the well established standardized PWR component and plant system technology, certain areas require both analytical and experimental investigation and verification. These areas relate especially to thermohydraulic, mechanical and neutron physics core design and associated safety and licensing items, as well as fuel irradiation performance. The main development items to be dealt with are:

- critical heat flux (DNB) and pressure drop tests,
- void reactivity experiments in a zero power critical facility in order to demonstrate an inherently negative void reactivity behaviour,
- emergency core cooling experiments in order to give evidence of coolability after a LOCA,
- furthermore, questions like the following have to be addressed:

  . design specifications for size, number and positioning of fuel and control assemblies,
  . thermohydraulic and mechanical reflector design,
  . fuel assembly hold-up device optimization.

It may be expected that a conversion ratio of 0.95 can be achieved with a negative void coefficient. For thermohydraulics there are certain indications that cladding tubes with helical fins of optimized inclination may crucially increase heat transfer conditions to such levels that even in tight lattices heat transfer can be ensured.

Early stainless steel clad LOCA ballooning experiments performed at the KfK REBEKA facility showed satisfactory deformation behaviour at high temperatures. The results have demonstrated a well coolable lattice geometry after a postulated LOCA and recent flooding experiments performed for a very tight lattice with p/d = 1.06 at the FLORESTAN facility (KfK) suggest that even extremely tight rod configurations appear principally coolable. Results from additional tests at the NEPTUN (EIR) facilities based on rod configurations with p/d approximately 1.12 will be the basis for computer code adaptation and verification within the development cooperation. Various SS single test rods with and without fuel are scheduled for irradiation at the Obrigheim PWR station to check the suitability of the envisaged clad material for high burnups. Test fuel bundles and fuel assemblies are scheduled for irradiation in a power reactor in the near future. Mechanical design problems will have to be solved for all components within the pressure vessel. Design details of all these components influence the integral concept. The overall objective of this R&D programme is to have the technical feasibility, including that for licensibility, established by the early 1990s as a prerequisite for the decision whether to enter a demonstration plant programme.

3.6 ADVANCED BWR 90 [55] (SWEDEN)

BWR 90 is the ABB-ATOM 1000 MWe nuclear power plant for the 1990s, based on the design and operation of BWR 75 in Finland and Sweden. The BWR 75 design developed in the 1970s is characterized by the use of internal recirculation pumps, fine motion control rods, and extensive redundancy and separation of safety-related systems. The experience of these plants forms the basis for the design of the BWR 90. Moderate modifications have been made to adapt to updating technologies, new safety requirements and to achieve cost savings. The average capacity factor of BWR 75 plants is about 90%, the occupational radiation exposure is about 0.5 manSv (1986 figures).

3.6.1 Reactor Design

3.6.1.1 Traditional recirculation system and favourable load-following

The reactor design has not been changed much. The recirculation system is based on the internal pumps driven by wet motors of the glandless squirrel cage asynchronous type. The motors are supplied individually with "variable frequency-variable voltage" power from frequency converters. This type of pump has been operating reliably (for more than two million operating hours) since 1978.

The internal pumps provide means for rapid and accurate power control in the high power range, and they are also advantageous for load-following purposes. The plant is characterized by the capability to accept a 10% step change in power with an equivalent time constant of 15 s with the reactor at constant pressure, or 5 s with floating pressure control. Ramp load changes of 20% per minute is accepted and useful for all operating plants of BWR 75 model. In the high power range, between 70% and 100% of nominal power, daily variations can be accommodated with the change rate above without restrictions. For wider power variations the extended range is achieved by means of adjusting the control rod pattern. Daily load following down to 40% is easily accommodated this way with a power reduction ramp of one hour or less. The return to full power from 40% will take two hours, taking current operating restrictions into consideration, but this is usually quite acceptable for the grid requirements.

Weekend load following, for example to meet reduced demands during weekends, may require a more cautious return from 85% to full power depending upon the past history of the movement of the control rods and the preconditioning of the fuel. The reason is that for the longer periods at reduced power, the xenon content in the fuel will reach a lower level and the return to full power will mean restoration of the Xenon content. Depending upon the details of the control rod sequence, it may be possible to reduce the waiting periods at 85% and 95% of full power. Current development work on nuclear fuel will most probably soon make it possible to ease the operating restrictions considerably.

The internal recirculation pumps have more than 10% excess flow rate capacity, which allows xenon override, and the fine motion control rod drives and the grey-tipped control blades allow control rod movements at full power. The built-in redundancy in the internal recirculation pump system implies that the reactor can be operated at full power even if one pump should fail. These load follow characteristics and the capability of operation at full power with one recirculation pump out of operation have been successfully demonstrated in the operating plants.

3.6.1.2 ATWS proof control rod drives

The control rod and control rod drives for the BWR 90 are of the well-proven design. The cruciform rod is based on a solid steel blade with drilled horizontal holes filled with the B_4C absorber. In the top the absorber consists of Hafnium making the rod tip more grey and providing a long life. The control rod drive (CRD) utilizes separate electro-mechanical and hydraulic functions, the former used for normal, continuous, fine motion of the control rod and the latter for fast insertion (scram).

The diversified means of control rod actuation and insertion (together with generous reactor pressure relief capacity) in combination with the capability of rapid reduction in the recirculation flow rate (pump run-back) has led to regulatory acceptance of the system as being a sufficient ATWS (anticipated transient without scram) measure. Thus, the CRD design is "ATWS proof".

The control rods are divided up into scram groups; each group is equipped with its own scram module, consisting of a scram tank, piping and valve. A total of 18 such scram groups are provided, comprising 8 to 10 rods. The rods belonging to any one group are distributed over the core in such a way that the reactivity interference between them is virtually negligible. The consequence of a failure in one scram group is therfore no more serious than sticking of a single rod.

3.6.1.3 SVEA fuel core

The reactor core in Forsmark 3 is composed of 700 fuel assemblies arranged in a square lattice configuration. Groups of four assemblies, surrounding a cruciform control rod, make up modular units. A fuel assembly consists of a bundle of 64 fuel rods in a 8 x 8 square lattice pattern surrounded by a fuel box acting as a coolant channel. A fuel rod consists of a column of slightly enriched uranium dioxide pellets contained in a sealed tube of Zircaloy-2. Some of the fuel rods contain a burnable absorber (Gd_2O_3) to suppress excess reactivity, and axial and radial grading of the burnable absorber (BA) content provides an efficient means for controlling the power distribution, i.e. for minimizing the power peaking.

The advanced burnable absorber design has significantly reduced the need for control rod displacements during operation, and constitutes a prerequisite for the mono sequence rod operation (MSO) concept. This means that control rods are always withdrawn or inserted in one predetermined sequence (without swapping) and at full power most rods are fully withdrawn from the core. This concept is a standard since 1977-78.

In the BWR 90, the size of the reactor core has been reduced to 676 assemblies. The reduction is based on the continued tuning of the BWR fuel and fuel management. In particular, the SVEA fuel (Fig.3.6.1) enables a very flat internal power distribution to be achieved. This reduced core has in fact already been demonstrated in the Forsmark plants. These have 676 fuel assembly cores, originally laid out for producing 940 MWe. In 1985, both units have started trial operation at the uprated power level of 1008 MWe.

The standard SVEA fuel assembly design contains four 4 x 4 subassemblies with a cruciform water gap between them, and this water gap significantly increases reactivity and reduces local power and burnup peaking factors. It also contributes to a mechanically favourably fuel

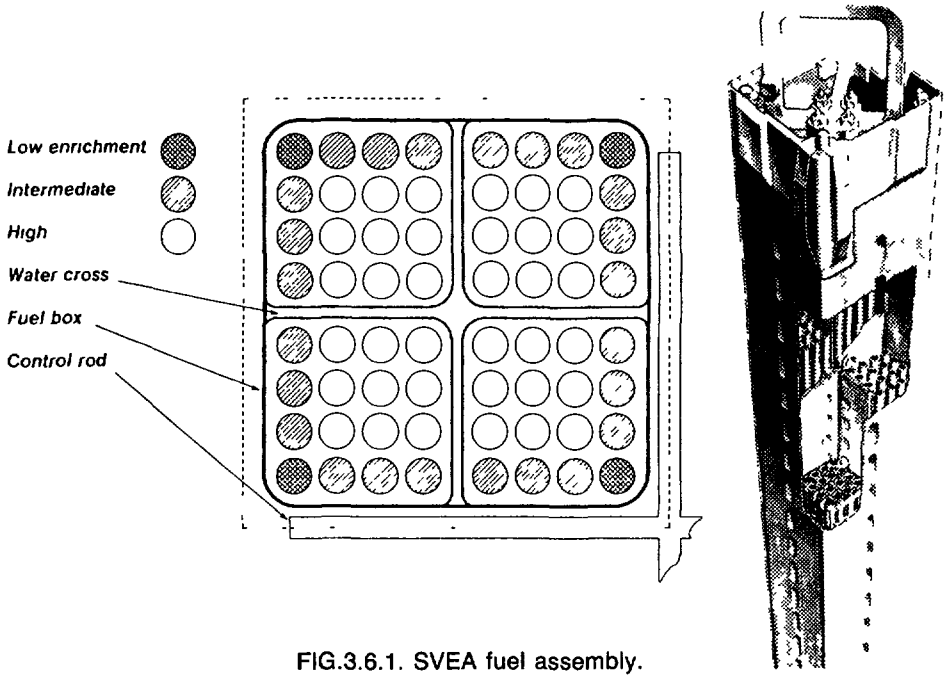

FIG.3.6.1. SVEA fuel assembly.

channel stucture with a very low creep deformation rate and a minimum amount of neutron absorbing Zircaloy. The standard SVEA design yields a substantially improved fuel utilization, and for plants with a great deal of load following and/or higher power densities the combination of SVEA fuel with a liner cladding has become a preferred option.

Still better performance is promised by a recently introduced version having sub-assemblies with the fuel rods arranged in a 5 x 5 lattice. With as many as 100 rods in the new design, the average linear heat rate is reduced by more than one third compared with the standard version. This allows for operation with high peaking factors and eliminates the need for liner cladding. The heat transfer area is enlarged by about 25%, yielding a calculated increase in dryout power by about 10%. Low fuel temperature and fission gas release, as a result of the low linear heat rate, contribute to a high burnup potential. The 5 x 5 version is designed to be hydraulically compatible with other fuel, and this results in a maximum acceptable fuel rod diameter very close to that of a standard 17 x 17 PWR rod.

The low fission gas release makes it possible to reduce the plenum length and increase the active length of the rods. With a peak linear power of 31 kW/m, which is the currently assumed limit for operation without power ramp rate restrictions, the end of life pressure will be less than 3 MPa at an average burnup of 50 MWd/kgU with an initial helium fill pressure of 0.4 MPa. Following laboratory tests, reactor verification started with the aim of demonstrating operation to high burnup with peak pellet ratings in the order of 60 MWd/kgU.

3.6.1.4 Refuelling cycle flexibility

One noticeable advantage of a BWR fuel cycle is the flexible length of the period between two successive refuellings. The fuel assembly size is much smaller than in a PWR, and by varying the number of fuel elements to be replaced, the refuelling schedule can be reoptimized whenever necessary to compensate for deviations between anticipated and actual energy production between refuellings. Two important features of the refuelling cycle as regards flexibility and cost are spectrum shift and coast down operation.

The core coolant flow range at full power, including excess pump capacity, determines the possible variation of average core void. In the internal recirculation pump reactors, the pumps have about 15% excess flow capacity at full power, which provides a valuable reactivity control amplitude, allows load following operation, and provides a means of affecting the axial power distribution. This flow window at full power is routinely utilized as well as the associated spectral shift effect. This way spectrum shift operation has since long been a standard procedure which implies significant fuel savings.

With respect to fuel cycle cost, there is an appreciable incentive to operate in a coast down, stretch out mode. Swedish and Finnish utilities regularly include coast down in their operations planning. A typical cost minimum will often occur at about 10-15% cycle extension, depending on fuel cost and replacement power cost. Coast down operation is especially favoured in connection with long fuel cycles and for once-through cycles. The cost minimum is generally rather broad, and so there will be considerable operation flexibility in addition to the planned coast down period, to meet higher than expected energy demands or needs for delayed refuelling shutdown. The coast down rate for the internal pump reactor (BWR 75) is about 0.34%/d, and core stability is maintained even at extensive coast down periods. As an example, the coast down operation of two plants started in the middle of March 1987, and at the end of June (after about 3 1/2 months) the electric output was down to about 40%.

The advanced burnable absorbers programme makes it possible to achieve sufficient shutdown margins also during a rather long "season" of, say 18 months. The 18 month cycle length with mono sequence control rod operation has been demonstrated repeatedly and successfully.

3.6.2 Reactor Protection and Control Systems

A key to modern process communication applied to the BWR 90 is the use of microcomputers for process control. Process communication from the control room is realized by means of distributed functional processors. These in turn interact via digital-analog converters with a number of object-oriented process adaptors. Thus, the protection and control system configuration is characterized by decentralization and the use of object-oriented intelligence. The decentralization implies that each section of the plant is controlled by a number of functional processors. The number of processors in each section is determined by the electrical separation requirements for safety-related sections and the number of objects. Typical examples of sections are:

- reactor operation,
- turbine operation,
- waste treatment,
- safety-related systems,
- diesel plant.

The functional processors are generally arranged as a dual system, with the two processors receiving the same process information, so that the standby unit may take over the control functions automatically in the event of a fault in the operative unit. The arrangement satisfies the requirements of redundancy and physical separation. It includes intelligent self-monitoring of protective circuits. The use of fibre optics for communication guarantees interference free performance and reduces cabling.

Standardization of the object-oriented circuits minimizes maintenance and the necessary stock of spare parts. The arrangement will also tend to improve availability, since components can be replaced quickly and simply.

A very important aspect is that the software is also standardized to simple programme functions, which makes it easy even for non-computer specialists to handle the systems, and it also simplifies implementation of new microcomputer generations. The decentralized configuration, combined with the use of isolation devices, reduces the safety concern of a damaged control room. If the control room should become unavailable, the local microprocessors will take control, and the operating personnel may supervise the process from separate emergency monitoring centres. The concept allows substantial reduction of space which has resulted in savings in terms of building volumes.

The Man-machine communication in the control room is facilitated by the consistent use of video display units (VDU), keyboards, and display maps. The control room contains several work stations, the reactor operation desk, the balance-of-plant operation desk, the turbine plant operation desk, and the supervisor's desk. Each work station in the control room is equipped with three VDUs. Typically, one VDU will display a total view of the process of interest, another will provide a list of alarms, and a third VDU will display a diagram with sufficient detail to facilitate operator action. An "overview " of plant functions and status is provided by a special overview panel, which may contain conventional instruments as well as computer-based CRT displays (CRT projections or EL displays). The overview presentation shows the main process in the form of a flow diagram, and indicates the status of various plant functions, e.g. normal conditions (green), disturbances (yellow), and system failures (red). The selected functions will generally correspond to process "pictures" at the operators' desks where detailed information is presented.

The status of safety systems and functions is presented in a similar way on another overview panel. The parameters that are of immediate interest in a disturbance situation, are presented directly. This means that the reactor pressure vessel with in- and outflow connections together with water level, reactor pressure, and neutron flux, as well as control rods fully in (or not) are displayed directly. Other safety functions are indicated as normal, disturbed or failed in the same way as for the plant overview above with detailed information at the reactor operator's desk.

The main computer has the task of collecting information from the process control systems, and it communicates with the distributed microcomputers via serial links. The main computer compiles the information and generates reports, automatically or on request. These reports comprise daily/weekly operation reports, reports of periodic testing, actual status reports, and disturbance reports. During normal plant operation, the main computer will present occurrences on a special CRT display located between the plant the safety "overview" panels.

3.6.3 Electric power systems

The electrical power systems for safety-related objects are strictly divided into four separated sub-distributions. This is a principle, which is already implemented in the operating BWR 75 plants, and which is maintained in BWR 90.

For the ordinary power distribution, some simplification has been introduced. The design of the electrical power supply systems is significantly affected by the requirement that the plant shall be able to withstand a grid voltage disturbance (sudden drop to 25% voltage on the generator buses, and a gradual restoration to 95% in 0.5 s, following a fault period of 0.25 s) without being tripped from the grid. This is a standard requirement on all thermal power plants to be connected to the interconnected Nordic grid system. During the low voltage period, all electric motors in the plant will slow down, and at the simultaneous re-acceleration when the voltage is restored, they will draw close to full starting currents, which in turn results in very large voltage drops. In order to ensure the restart of the motors without tripping of relay protections, the power supply system must be designed with this requirement in mind, and to this end it is important to minimize the ratio between motor load and available short circuit power on all busbar systems.

The design of the process systems in the BWR 90 has reduced the ratings of some of the major loads. The introduction of static power supply converters for the feedwater pumps, for instance, implies reduced starting currents during pump startup, i.e. the requirements on minimum short circuit power on the busbar system are significantly reduced. Modern switchgear components, having higher short circuit ratings, are now available, and consequently a significant simplification of the structure of the auxiliary power systems has been made possible.

Another visible feature is that the number of distribution voltage levels has been reduced. As an example, it can be noted that DC distributions at several voltage levels for power supply to control equipment has been replaced by power supply from the battery-backed AC distribution, using distributed AC/DC converters for the supply to the various types of equipment.

3.6.4 Reactor Containment and Core Melt Protection

The BWR 90 pressure suppression containment consists of a cylindrical prestressed concrete structure with an embedded steel liner, see Fig.3.6.2. The containment vessel, including the pressure suppression system and other internal structual parts as well as the pools above the containment, forms a monolithic unit and is statically free from the reactor building, with the exception of the foundation slabs.

Recent regulatory developments indicate a need to strengthen the capability of the reactor primary containment to withstand the effects of a core melt accident. Requirements in this regard are being codified in Finland and Sweden. Figure 3.6.2 illustrates the modifications made to the reference plant containment to achieve enhanced safety during a degraded core accident in the BWR 90 plant. The essential features are:

1. Horizontal openings between drywell and wetwell for blow-down of steam to the suppression pool.
2. The relief pipes from the safety/relief valves are drawn into the supression pool via the lower drywell rather than penetrating the drywell-wetwell intermediate floor.
3. A pit is provided at the bottom section of the lower dry-well for the purpose of collecting and confining fuel melt debris. The cylindrical wall and pit form a pool which is filled with water in the event of a severe accident.

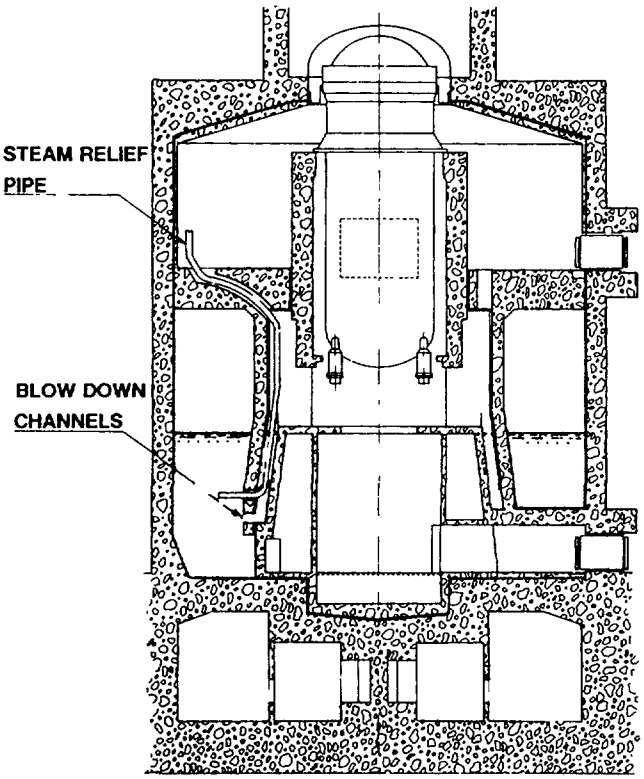

FIG.3.6.2. BWR 90 — reactor containment.

These arrangements improve the reliability of the pressure suppression system and reduce the probability of containment leakage during an accident. In addition, the containment vessel may optionally be vented through an external filter of the type now being installed in all operating Swedish nuclear power plants.

3.6.5 Reactor auxiliary systems

No significant changes have been decided for the auxiliary systems. It has, however, been possible to reduce the capacity of the low pressure injection system and still maintain a great margin in emergency core cooling. this is an important contribution to the load reduction on the electric auxiliary power systems.

A modification in the offgas system has led to a reduced sand decay volume by which a reduced building volume has been obtained with an unchanged offgas filtering and decay function.

3.6.6 Plant Layout

The plant and buildings of the BWR 90 are laid out and designed to satisfy aspects of safety, maintenance and communication in a balanced way. The layout is strongly influenced by safety requirements, notably physical separation of safety-related equipment.

The arrangement of the buildings is shown in Fig.3.6.3. The essentially "nuclear" and safety-related portions of the plant, i.e., the reactor, control and diesel buildings, are situated below and separated from the "conventional" turbine and auxiliary portions by a wide communication area.

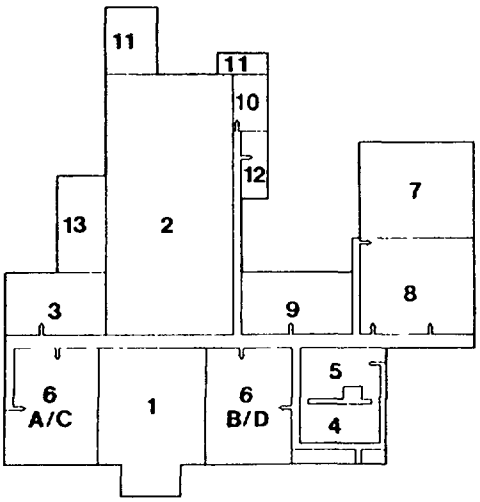

1 Reactor building
2 Turbine building
3 Auxiliary systems building
4 Entrance building
5 Control building
6 Diesel buildings A/C, B/D
7 Waste building
8 Active workshop building
9 Electrical building
10 High voltage switchgear building
11 Transformer buildings
12 Water treatment building
13 Cooling water pump building

FIG.3.6.3. BWR 90 — building arrangement.

This arrangement is advantageous when building the plant as well as during plant operation, since the conventional part does not interfere with the nuclear part, but still provides a compact layout with short piping cabling connections. The reactor building encloses the primary containment and forms a secondary containment, including a common bottom slab. The building also houses all primary process and service systems for the reactor, such as handling equipment for fuel and main components, fuel pools, reactor water cleanup system and hydraulic scram system. The bottom part of the building contains separated compartments for safety-related systems, emergency core cooling systems and certain control equipment. The four-divisional configuration of the safety systems, including ECCS, was subjected to critical review. It passed the scrutiny and was reconfirmed as constituting an optimal arrangement with respect to safety, layout, and maintainability.

The diesel buildings are located on opposite sides of the reactor building, with two adjoining parts on each side. They contain the four standby power diesel generators and the auxiliary power supply and control equipment for the four subdivisions of safety-related systems. The safety-related service water and intermediate cooling water systems are also located in these buildings. The high reactor building provides an excellent physical protection for the diesel buildings and the safety-related systems installed in them.

The layout indicated here is associated with a substantial reduction of building volumes as compared with the reference BWR 75 design. As a result, the BWR 90 building arrangement implies a significant cost reduction.

Separation principles

An extensive separation of the redundant parts of the safety-related systems has been made as protection against internal accidents, fire and various forms of external damage. The separation generally implies that the redundant sub-systems are located in physically separated areas, that they are supplied with electric power from different and separated diesel-or battery-backed busbars, and that these areas in most cases are ventilated by separated sub-systems.

The plant is consistently divided into fire zones and fire cells in order to separate redundant parts of the safety-related systems. All emergency cooling systems are divided up into four entirely independent circuits. Each circuit is located in its own bay close to the reactor containment and surrounded by thick concrete walls. The physical separation is maintained all the way to the ultimate heat sink. Fig.3.6.4 illustrates the general principle.

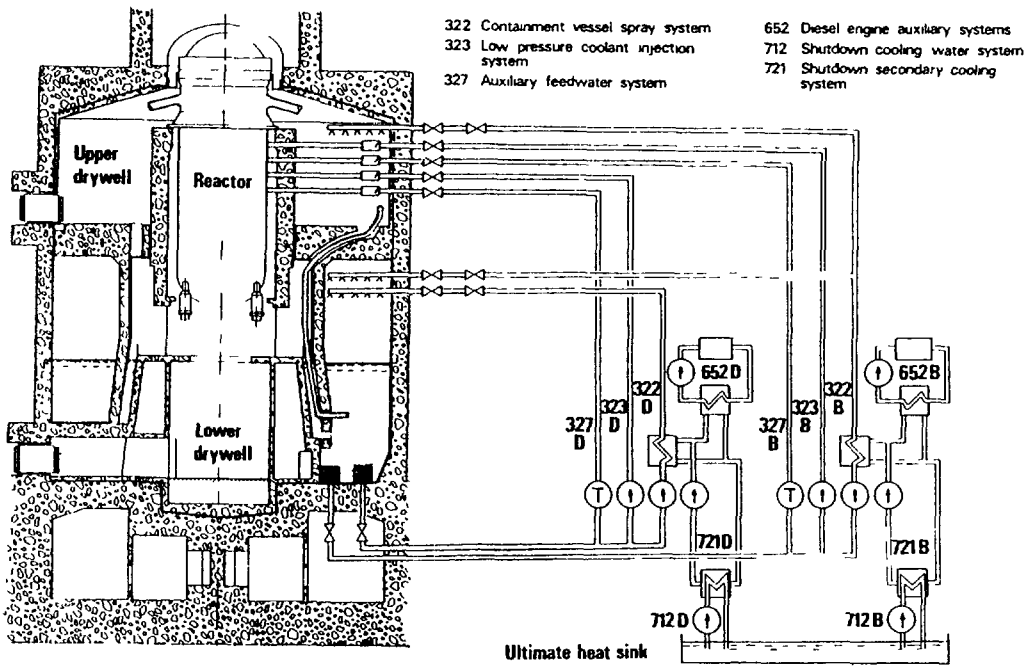

FIG.3.6.4. BWR 90 — emergency cooling systems.

As in the case of the emergency cooling systems, the safety-related electrical equipment is also divided up into four independent and physically separated parts or subdivisions, and the reactor protection system operates on a 2-out-of-4 actuation logic (performed in each subdivision).

3.6.7 Project Planning and Cost Reductions

A substantial effort has been made to reduce the total project costs when delivering a reactor plant. The experience from the two latest units which are reference plants for BWR 90 has been scrutinized thoroughly. It was found that significant savings are possible although the total project time was already considered short for the two plants. For example, Oskarshamn 3 was completed in 57 months' time (from start of pouring of concrete to full power). A careful evaluation of project planning, however, indicates that a further reduction to 54 months' time should be practicable. Since the cost of capital during construction is high, the incentive to achieve this time reduction is great.

The new layout saves some 150 000 cubic meter of building volume and thus represents the most obvious point of cost reduction, estimated in the range of $40 million. Cost reductions in the order of $4-5 million should also be attainable in each of the areas of control equipment, auxiliary power plant, and ventilation systems. It should be possible to take advantage of the "leak-before-break" criteria which means that the number of pipe whip restraints can be reduced substantially, resulting in a significant cost saving.

3.7 THE VVER-1000 AND VVER-1800 DESIGN [56-58] (USSR)

3.7.1 Design Features of VVER-1000

3.7.1.1 Plant layout

The flow diagram of the VVER-1000 Nuclear Steam Supply System (NSSS) together with safety and auxiliary systems is given in Fig.3.7.1. The basic parameters of the steady-state operating conditions are given in Table 3.7.1.

TABLE 3.7.1
GENERAL PARAMETERS OF NORMAL OPERATION

Parameter	Value
Reactor nominal thermal power MW	3000
Primary pressure MPa	15.7
Steam generator steam pressure MPa	6.27
Nominal steam rating t/h	5880
Steam humidity at steam generator outlet, not more than %	0.2
Coolant flow rate through the reactor under nominal conditions m^3/h	84 800
Loop number	4

TABLE 3.7.2
BASIC PARAMETERS OF REACTOR AND CORE

Parameter	Value
Reactor outlet temperature °C	320
Coolant heating up in the reactor °C	30.3
Reactor pressure loss MPa	0.38
Reactor height mm	19 122
Vessel diameter (over flange) mm	4570
Maximum design fast neutron fluence with energy 0.5 MeV neutron/cm^2	5.7×10^{19}
Steel grade of vessel material	I5X2HMΦA
Total number of core fuel assemblies	163
Number of fuel assemblies with clusters of control and protection system (CPS)	61
Number of fuel elements in fuel assembly	312
Number of absorbing elements in cluster	18
Fuel element pitch mm	12.75
Fuel element diameter mm	9.1
Absorbing element diameter mm	8.2
Number of neutron measuring channels	64
Number of temperature control channels	95
Coolant flow rate through fuel element assembly m^3/h	515±55
Radial power peaking factor	1.5
Local nuclear power peaking factor	2.24
Engineering local heat flux factor with account for calculation procedure error and technological tolerances error	1.16
Coolant temperature at maximum powered fuel assembly outlet °C	336.3
Maximum linear heat generation rate at nominal power W/cm	432
Minimum DNBR at nominal parameters	1.73
Operating time at nominal power between refuellings h	7000
Fuel burnup, average MWd/kg	40
Fuel enrichment with uranium-235 isotope wt%	to 4.4
Fuel life-time years	3

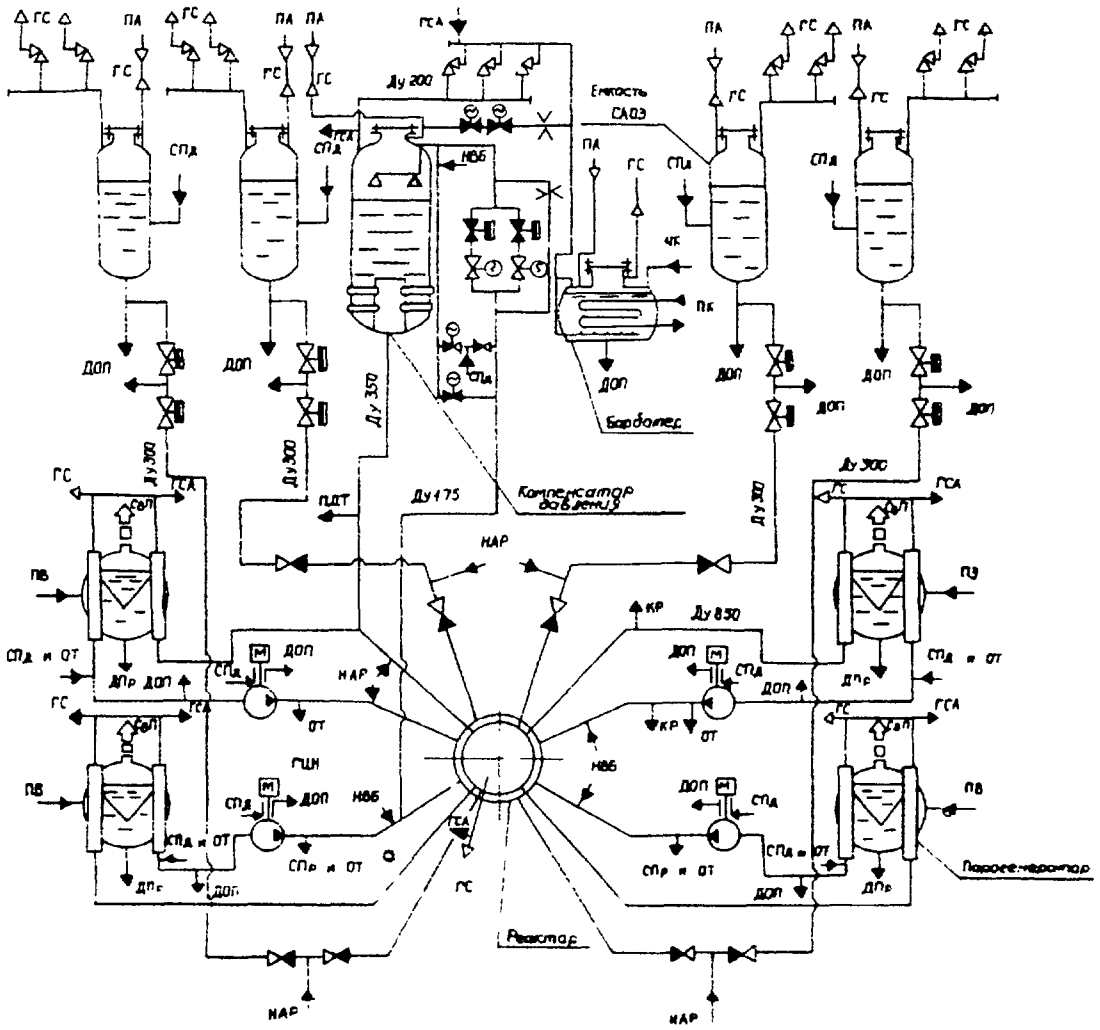

ПА	- Nitrogen supply	ПВ	- Peed Water
ГС	- Gas pump system	СПр	- Primary loop blowing system
СПд	-Makeup water system	НББ	- Emergency boron injection pump
ДОП	-Primary loop drainage system	ДПр	- Steam generator drainage and blowing system
ЧК	-Condenser purification system	КР	- Heat removal system
ПК	-Intermediate loop system	ОТ	- Coolant cleaning bypass
СвП	-Fresh steam	ГСА	- Emergency gas pumps system
НАР	-Emergency cooling pumps	ПДТ	- Pipe breathing heating system

FIG.3.7.1. Reactor systems.

The following design requirements were taken into account: compact and rational layout of equipment; separate maintenance of contaminated and non-contaminated equipment; drainage and venting of equipment taking into account capacities during pipe breaks and seismic actions; protection from flying objects; natural circulation in the primary circuit. The layout satisfying the above requirements is shown in Figs 3.7.2, 3.7.3. The earthquake resistance of the equipment and pipelines is ensured basically by means of additional supports and hydraulic shock-absorbers. The location of the main circulation pumps and steam generators on rolling-contact bearings

Text continued on p. 62.

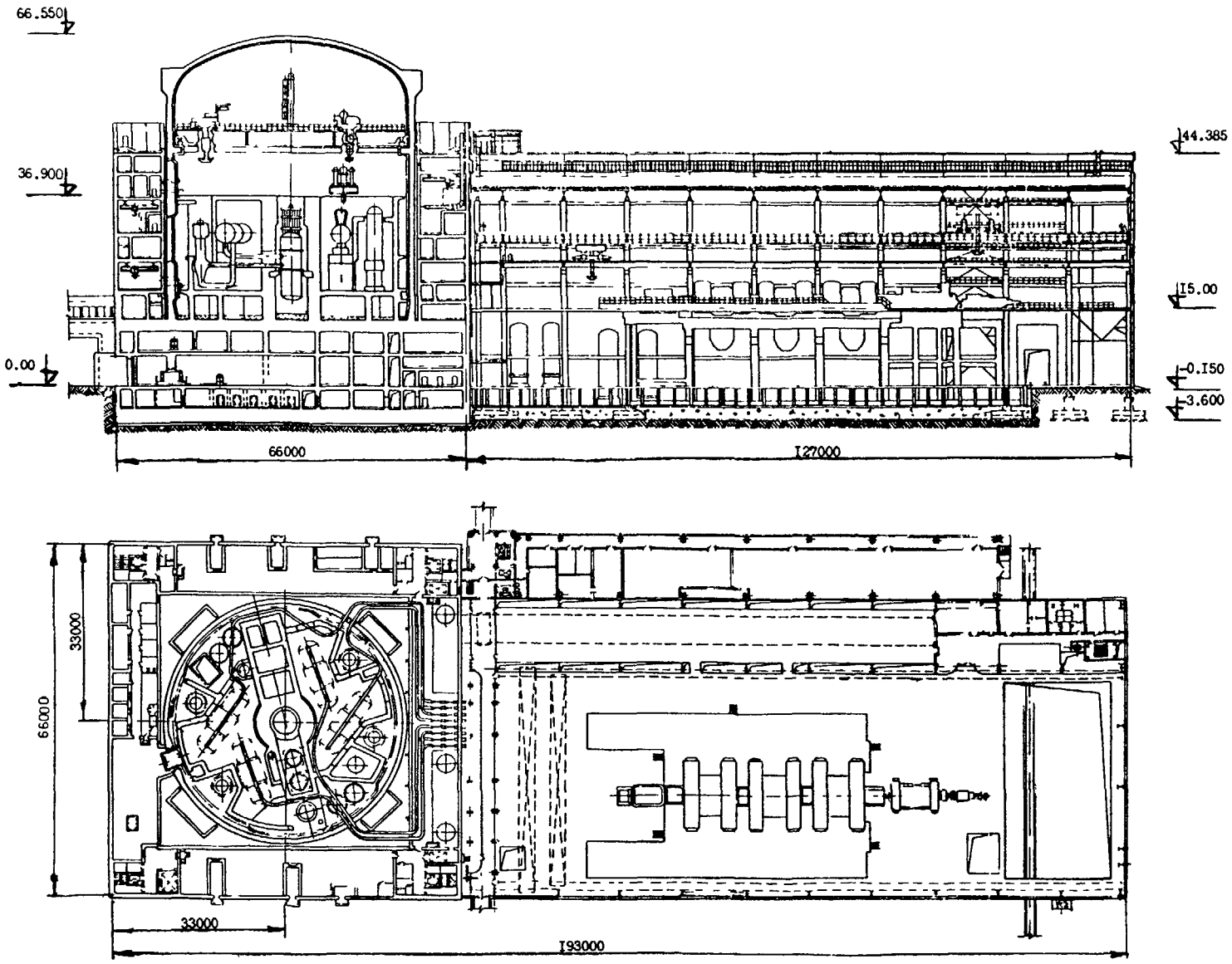

FIG.3.7.2. Plant arrangement (with 1000-60/1500 turbine).

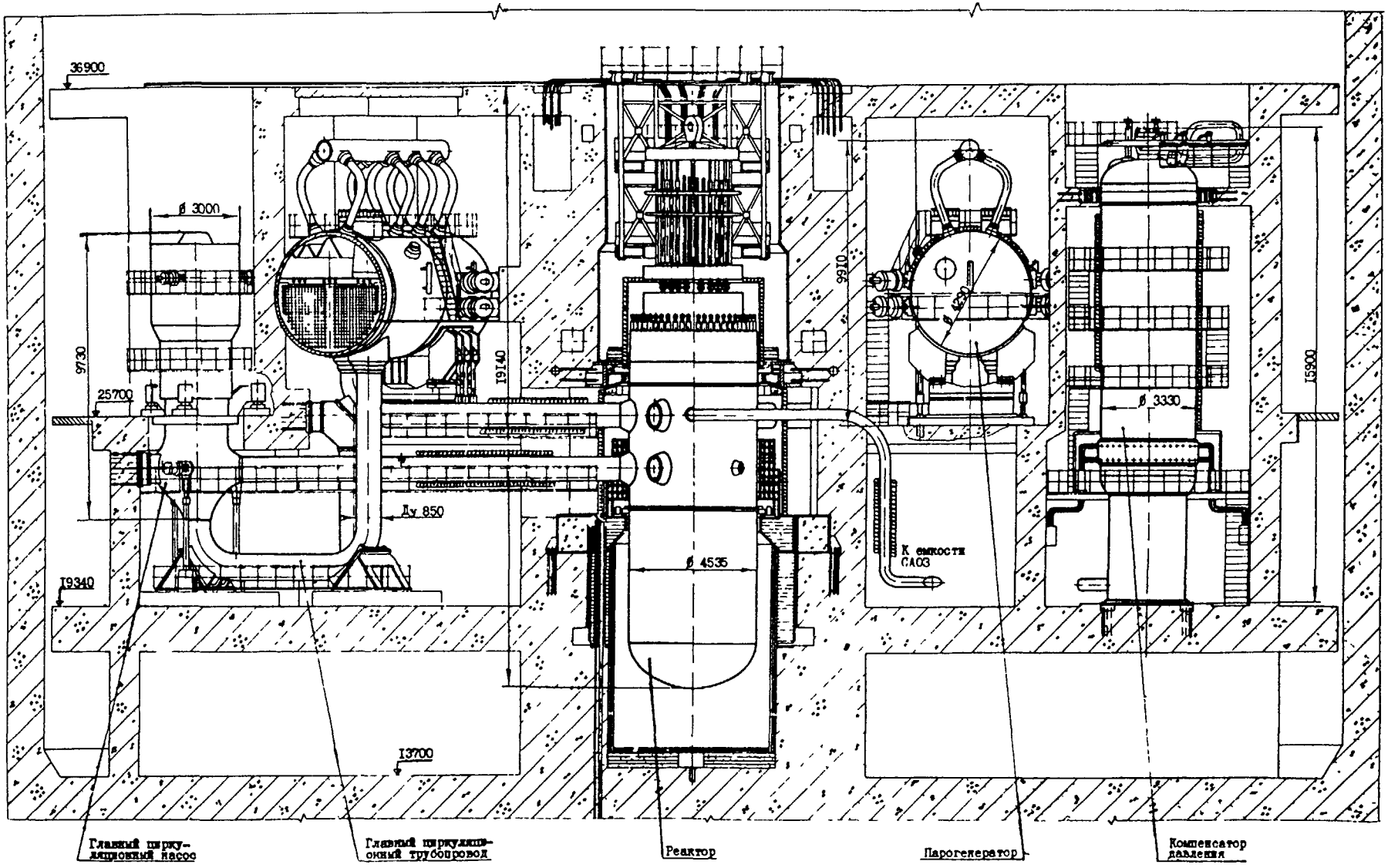

FIG.3 7.3 Component arrangement of the primary system.

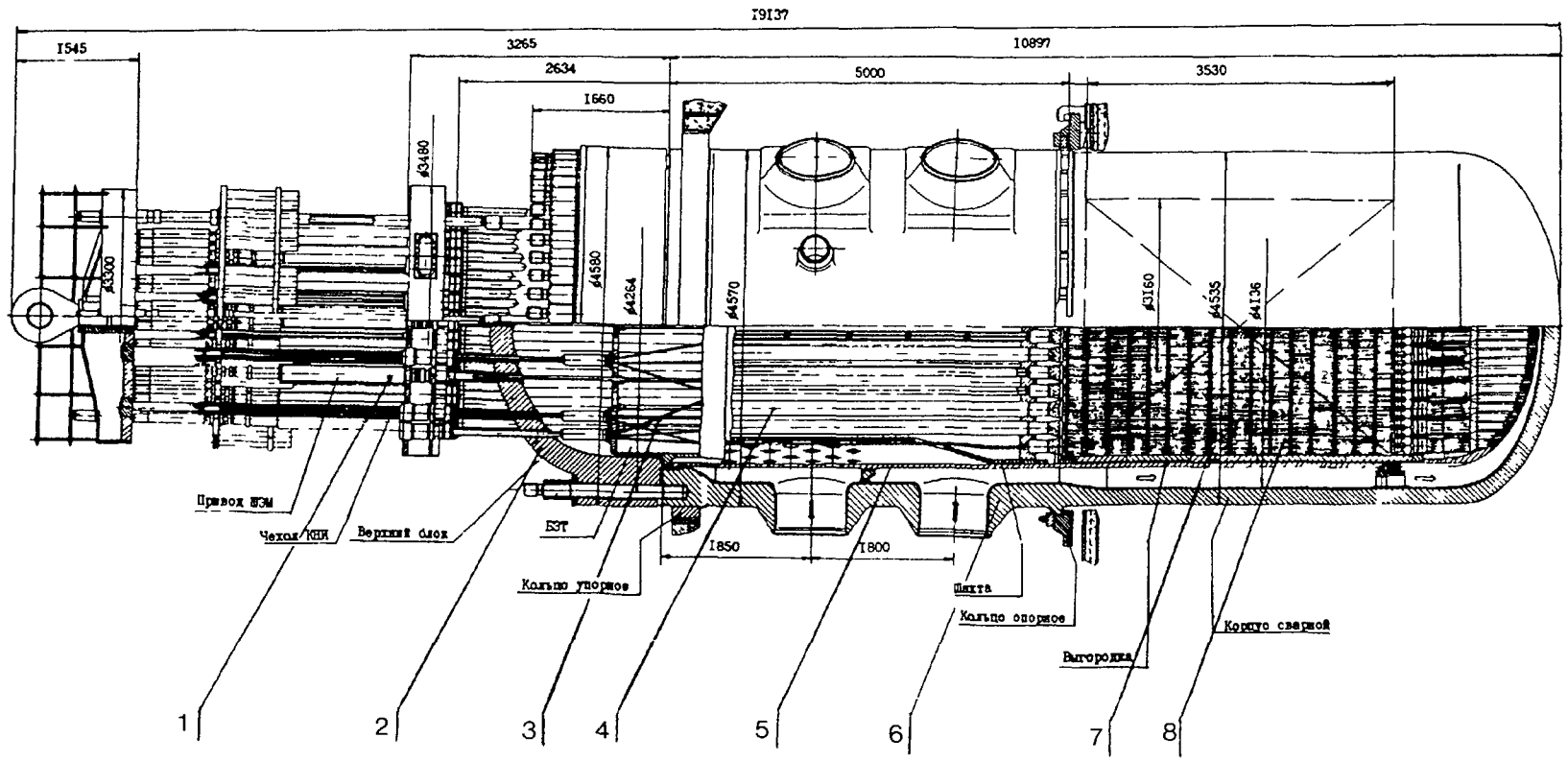

1 - control rod drive mechanism CRDM
2 - upper block
3 - control rod guide tube
4 - safety rod guide tube
5 - inner vessel
6 - reactor pressure vessel
7 - interface
8 - core assemblies

FIG.3.7.4. VVER-1000 reactor pressure vessel.

at approximately the same level as the reactor support minimizes thermal stresses in the main circulation lines because of self-compensation during startup and cool-down. The fixings are designed for loads which occur during breaks of the main circulation lines and earthquakes. The VVER-1000 reactor has provision for unloading the reactor vessel internals under a layer of water to protect the personnel from radiation during maintenance. For this purpose, there is a fuel pool and an internals storage pool, interconnected when filled, with two inspection wells.

3.7.1.2 Reactor pressure vessel and core

The design of the VVER-1000 reactor pressure vessel is shown in Fig.3.7.4. The reactor consists of pressure vessel, its closure upper block, and internals. None of the vessel sections have longitudinal welds.

The VVER-1000 reactor uses shell-less fuel assemblies. A part of fuel assemblies have removable burnable absorbers. The fuel elements having a triangular arrangement are shown in Fig.3.7.5 - 3.7.7. In 61 fuel assemblies clusters of absorbers rods are installed. The main operating and design characteristics of the VVER-1000 reactor cores are given in Table 3.7.2. The drive mechanism for rod clusters uses a stepped electromagnetic drive.

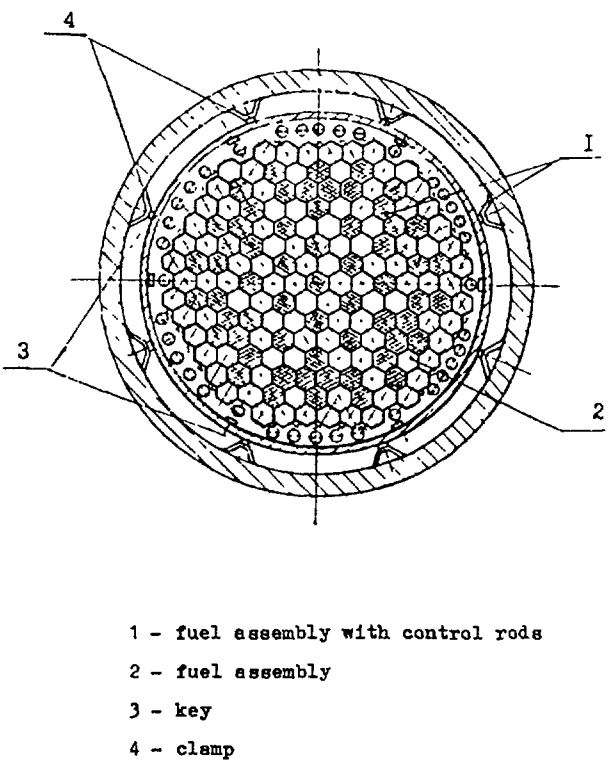

FIG.3.7.5. VVER-1000 reactor core.

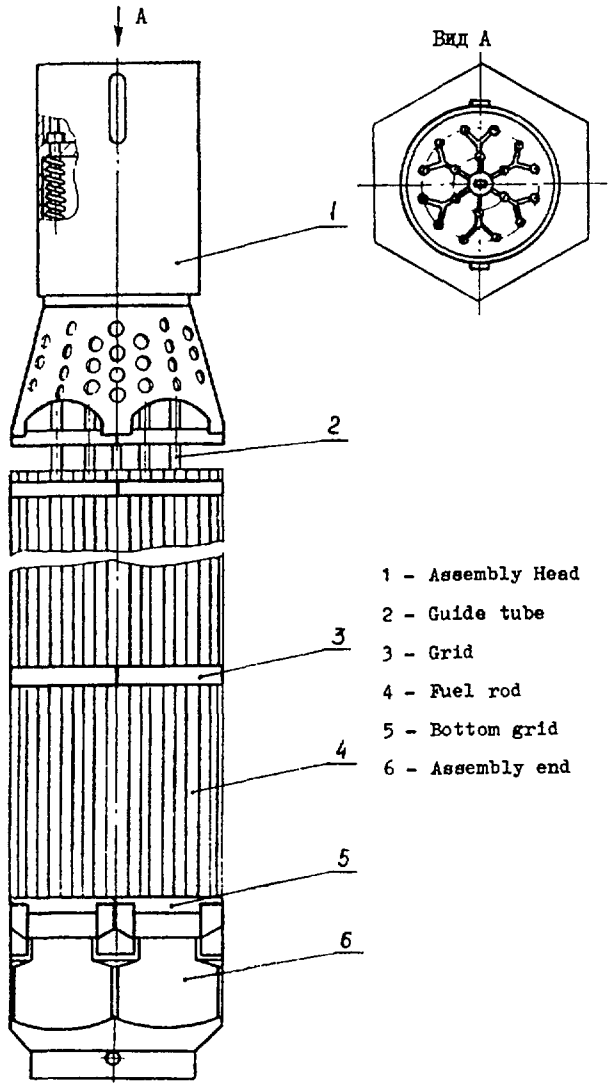

FIG.3.7.6. Fuel assembly.

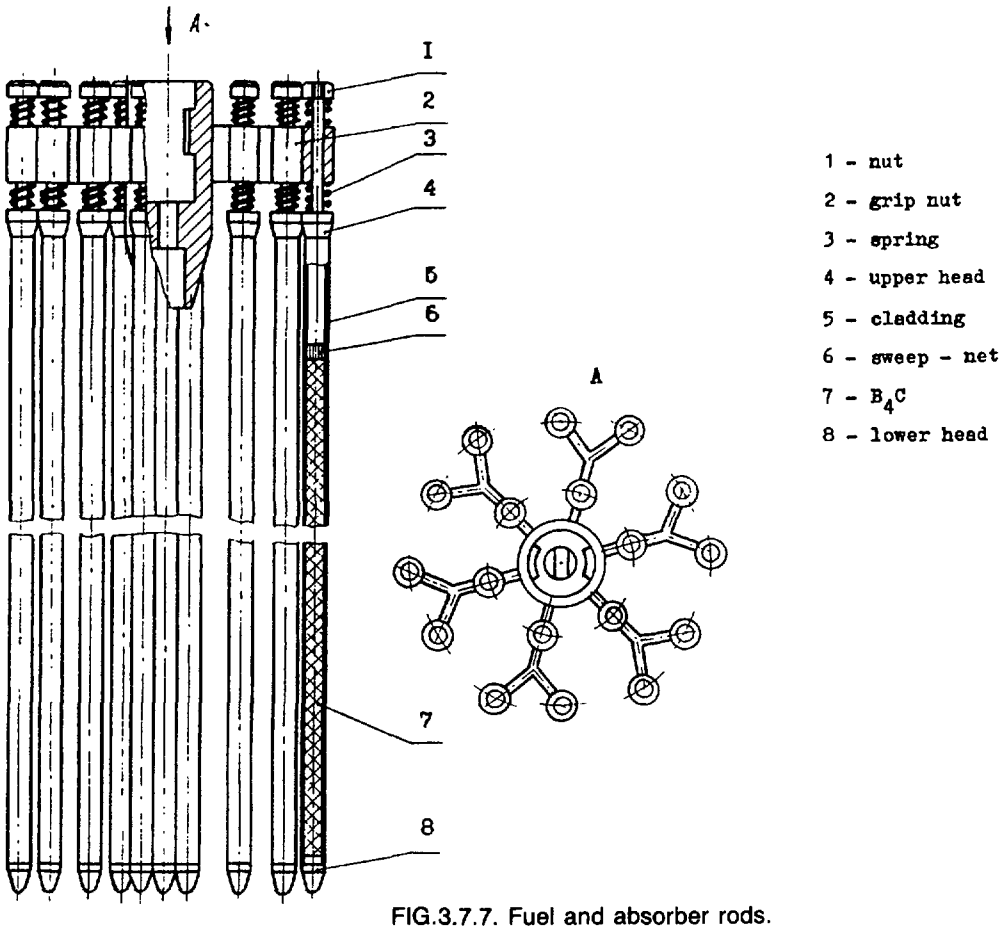

FIG.3.7.7. Fuel and absorber rods.

For vessel components the 15Kh2NMFA [15Cr2NiMoVA] steel is used. The 15Kh2NMFA-A steel with a low impurity content, is used in order to ensure better radiation resistance in the sections of the reactor vessel facing the core. The vessel internals are made of the 08Kh18N10T [08Cr18Ni10T] stainless steel. A zirconium alloy with 1% niobium is used for fuel element cladding.

Calculations, experimental studies and tests were performed to confirm hydromechanical strength of the fuel assemblies by service life tests. Vibration strength of the vessel internals was confirmed by the results of model (1:5 scale) and full-scale tests on the prototype (Novo-Voronezh Unit V). The most stressed components of the reactor vessel - the zone of nozzles and the closure head - were confirmed by model studies. The main nuclear physics and thermohydraulic characteristics are given in Table 3.7.2. The hydraulic characteristics were studied in an experimental rig on a 1:5 scale and confirmed subsequently by full-scale studies.

3.7.1.3 Steam generator

The design of the steam generators (PGV-1000) is shown in Fig.3.7.8, 3.7.9. These are horizontal single-shell steam generators with submerged heat-exchange surface. Their main operating and design characteristics are given in Table 3.7.3. The need to ensure transportability by rail was taken into account during the design. The steam generator consists of the following main components: shell, device for distribution of the main feed water, device for distribution of emergency feedwater, heat-transfer surface and primary circuit headers, separator and steam load equalizer.

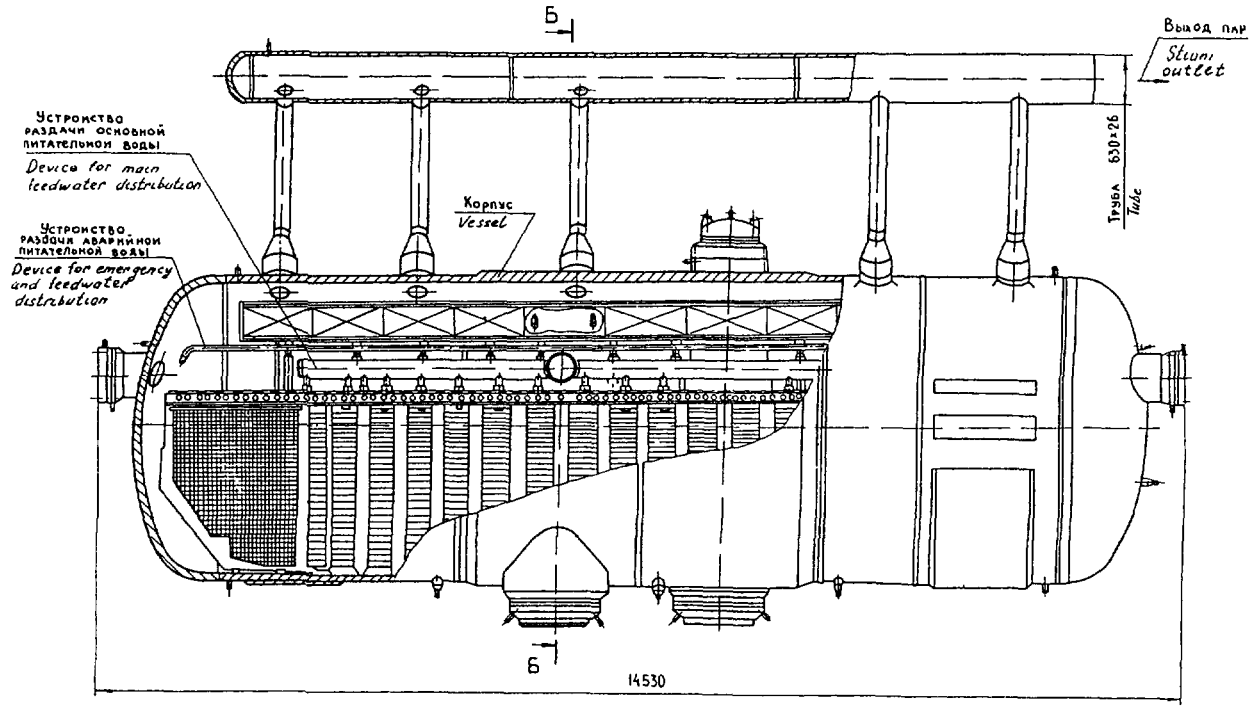

FIG.3.7.8. PGV-1000/M steam generator.

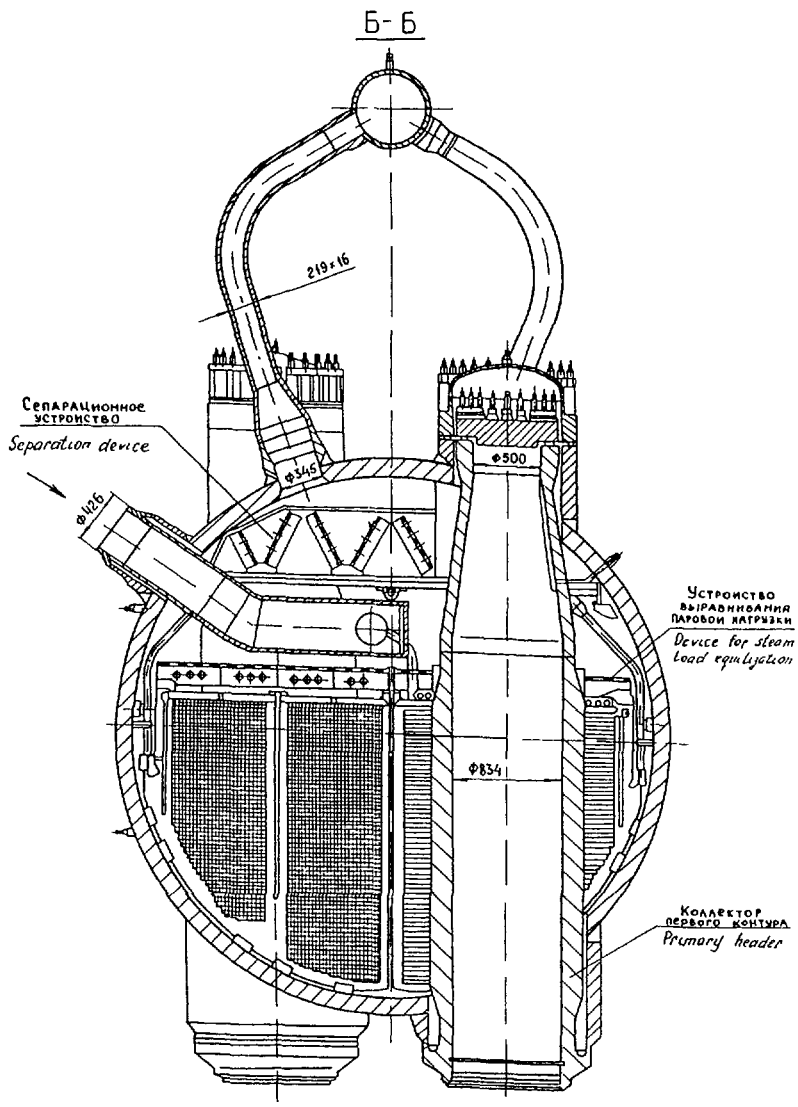

FIG.3.7.9. PGV-1000 steam generator.

TABLE 3.7.3
MAIN PARAMETERS OF STEAM GENERATOR

Parameter	Value
Steam capacity t/h	1470
Steam pressure at steam generator outlet MPa	6.27
Primary coolant temperature at steam generator inlet °C	320
Primary coolant temperature at steam generator outlet °C	289.7
Feedwater temperature °C	220
Steam humidity at steam generator outlet, not more than %	0.2
Vessel diameter mm	4290
Number of heat exchanging tubes	6115
Average length of tubes mm	11 100
Steel grade of primary headers	IOГH2MФA
Vessel steel grade	IOГH2MФA

The feedwater distribution device consists of a header and distribution pipes with water outlet holes along their length. The feedwater is supplied to the "hot" side of the pipe bundle in its upper part. The emergency feedwater distribution device comprises a header and distribution pipes with water outlet holes along their length. The header is connected with a special inlet nozzle for emergency feedwater.

The heat-transfer surface of the steam-generators consists of U-shaped tubes with staggered arrangement in the bundle. The tubes are spaced in the tube bundle by sectional grids. The primary circuit headers are intended for coolant distribution in the heat-exchange tubes. In their lower part the headers have nozzles for connection with the main circulation line.

The separators consist of a stack of corrugated louvres located behind the stacks of slotted steam receiving plates. The steam load equalizer comprises slotted plates situated below the steam generator water level. Levelling vessels are installed for level control in the steam generators.

The PGV-1000 uses stainless steel for the internals except for the primary circuit headers, which are of the pearlitic high-strength low-alloy steel 10GN2MFA [10MnNi2MoVA]. The 22K steel is employed for the steam generator shells. In connection with the use of the 10GN2MFA steel, tests were carried out to determine the compatibility of this steel with stainless steel in the joints of heat-exchange tube headers. Prolonged tests did not reveal corrosion damage in the tube material and header components at the joints between the header and tubes.

With a view to confirming the strength and validating the technology of manufacture of steam generators tests were carried out on the following steam generator joints which are subject to the highest stress: junction with the primary circuit header, junction with the nozzle of the secondary circuit hatch, zone of connection of the steam nozzle with the shell and steam header and a number of others.

3.7.1.4 Primary loop

The inner diameter of the main pipe of primary loop is 850 mm. Its design ensures full decontamination and drainage. It is planned to make the pipe blocks in the factory with welding of nozzles and nipples in order to reduce the volume of welding during assembly. The nozzle ends where bimetallic tubes are welded on are supplied with surfacing so that welding can be carried out at the time of assembly without heat treatment. Heat treatment is performed after the pipe blocks are welded during assembly. There are no longitudinal welds on the main circulation pipe. The 10GN2MFA steel with stainless steel surfacing is used for the pipe.

The main circulation pumps GTsN-195-M are centrifugal pumps with fly-wheels. The principal technical characteristics of the main circulation pumps are given in Table 3.7.4.

The pressurizer system is designed so that the turbogenerator trip to house load without scram is taken as the decisive operating conditions with the maximum positive volume perturbation (Table 3.7.5). The decisive operating conditions with the maximum negative volume perturbation were

TABLE 3.7.4
MAIN PARAMETERS OF REACTOR COOLANT PUMP

Parameter	Value
Delivery m^3/h	21 200
Head MPa	0.618
Power at coolant temperature 290°C kW	5300
Nominal voltage energizing the motor V	6000
Operating rate of rotation rev./min	1000

TABLE 3.7.5
MAIN PARAMETERS OF PRESSURIZER SYSTEM

Parameter	Value
Pressurizer full volume m^3	79
Pressurizer water volume m^3	55
Pressurizer steam volume under nominal conditions m^3	24
Total power of electric heater units kW	2520
Total number of electric heater units	28
Number of pressure relief valves (PRV)	3
Design steam flow rate at PRV operation t/h	180
Maximum design injection flow rate m^3/h	540
Maximum design flow rate over line of continuous leakage m^3/h	1
Setting for test PRV actuation MPa (1 PRV)	18.1
(2 PRV)	18.6

spurious scram at rated load. The throughput of the pulse-type safety valves of the primary circuit overpressure protection system was determined on the basis of the limiting conditions of pressure rise in the primary circuit - turbogenerator load rejection from the rated value to zero without reactor scram by a direct signal upon failure of the devices for steam dump to condenser and to atmosphere, failure of spray into the pressurizer and failure of one pulse-type safety valve. Under these conditions the maximum pressure in the primary circuit does not exceed the maximum permissible value of 19.4 MPa (198 kg/cm^2). The characteristics of the pressurizer system are so chosen as to preclude reactor scram upon trip to house load and during upset conditions not requiring reactor scram. The main technical characteristics of the pressurizer system are given in Table 3.7.1.

3.7.1.5 Passive part of the emergency core cooling system

Its purpose is to inject boron solution into the core to ensure its cooling during accidents with depressurization of the primary circuit to 5.9 MPa (60 kg/cm^2) as a result of loss of coolant. It consists of four independent hydraulic accumulators, each of which is connected to the reactor by a line with check valves and quick-closing valves. The diagram of the system is shown in Fig.3.7.1. The flow diagram of the system is chosen with a view to ensuring the most favourable core cooling conditions for different locations of the leakage point.

The nitrogen volume and pressure in the hydraulic accumulator and the hydraulic resistance of the lines connecting the reactor are so chosen as to ensure the flooding rate necessary for core cooling. The volumes of the boron solution and the hydraulic accumulator are such as would ensure sufficient stock of the solution to cool the core during a design basis accident until the pumping of boron solution starts from the active part of the low-pressure emergency core cooling system.

In determining the main characteristics of the system the failure of one channel of the system to respond during a design basis accident was taken into account.

3.7.1.6 Improvements in safety and reliability

Substantial improvement in safety and reliability for updated VVER-1000 design is achieved by:

1. assurance of negative temperature coefficient of reactivity under all reactor operating conditions,
2. passive system of rapid boron injection into the primary circuit,
3. possibility of the reactor bringing into subcritical state (t = 100 - 150°C) without additional introduction of liquid absorber,
4. core cooling in case of damage of the reactor internals,
5. exception of possibility of the reactor vessel brittle failure,
6. possibility to catch and cool the molten core outside the reactor vessel,
7. availability of passive system of residual heat removal from the reactor during 24 hours in case of complete loss of power supply and without operator intervention during first 10 hours,
8. containment protection system against pressure excess above the limit with recombination of hydrogen formed and discharge and cleaning of gas-vapour mixture from radioactive aerosols and iodine using filters,
9. simplification of layout design, reduction of a number of the applied pumps, valves, etc.,

10. application of diagnostic check system for the main equipment and primary pipelines, the latter comprising subsystems specified as following:

- inside inspection of the reactor vessel,
- inspection of steam generator tubes,
- diagnostic check of the reactor plant valves,
- determination of residual life of the reactor plant equipment,
- diagnostic check of the reactor plant state under power operation:
  . check of initiation and extension of flaws in the equipment material,
  . remote control of the equipment operation,
  . detection of possible leaks,
  . noise check of control drives for protection, internals, primary circulation pumps,
  . detection of free-moving objects in the circuit,
  . outside inspection of the vessel and the reactor bottom,
- diagnostic check of accident failures of the equipment and advices to operator for effective overcoming the accident.

3.7.2 The development of VVER-1800

The experience of developing and operating the VVER-1000 plant, the attainment of full production capacities by the Atommash Production Corporation and the success in shipping equipment which could not be transported by rail provided the incentive for starting the design of the VVER-1800.

The four-loop reactor VVER-1800 with a capacity of 5250-5800 MWt represents the next stage of development of VVER-1000. It is being developed on the basis of the principles, methods and technologies of VVER plants. In particular, the following fields are similar with those of VVER-1000: the design rules and standards, hydrodynamics, the structural materials, the methods of physics, thermohydraulic and strength analysis, the design of main components and systems, the horizontal steam generators without a separated economizer section, the outlets for the in-core monitoring system on the reactor closure head arranged peripherally, etc.

For the VVER-1800 design further improvement and enhancement of safety is planned along the following lines:

1. reduction in the inhomogeneity of power density in the core (optimization of fuel enrichment along the height and use of burnable absorbers),
2. increase in the conductivity of the clad-fuel clearance (by raising the manufacturing precision and by applying coatings),
3. increase in the efficiency of the mechanical control elements (by raising the number of control elements and by optimizing their arrangement) with a view to improving nuclear safety and to satisfying the requirements of load-follow operation,
4. use of a core with more optimal reactivity coefficients in order to enhance safety during emergency operation and transients (four-year refuelling interval and efficient arrangement of burnable absorbers in the core),
5. replacement of stainless steel by zirconium alloy for spacer grids and guide tubes in fuel assemblies,
6. in-core fuel management with low neutron leakage,
7. use of control and protection system drives of higher reliability,

8. fast and reliable injection of liquid absorber into the reactor, starting from rated parameters, in order to bring the core to the sub-critical state during rapid cool-down,
9. ensuring core cooling during "large" leaks from the primary to the secondary circuit,
10. reduction of dissipation in the structure materials and guarantee of their properties in order to reduce wall thickness and quantity of metal,
11. use of rolled instead of forged shell sections to reduce metal consumption for production of equipment,
12. ensuring measurement of reactor thermal power with an accuracy not lower than ± 2% and a confidence coefficient of 99%,
13. provision of diagnostic systems in the reactor (systems of periodic checking of all major equipment, system of monitoring the appearance and development of defects in material by acoustic emission tests, system of leak detection, system of vibrations monitoring and so on),
14. provision at power plant units of a highly reliable digital process computer system with self-checking and an expert system giving advice to the operator,
15. ensuring passive decay-heat removal from the core during total loss of power at the unit, including loss of reliable AC power supply,
16. reduction in neutron fluence on the reactor vessel and ensuring radiation life of the vessel for 70 years,
17. increase in the distance from the inlet nozzles in the reactor vessel to the top of the core so as to eliminate by the passive method the aggravating influence of the hydraulic seals in the cold sectors of the main circulation lines on core cooling conditions during leaks from the primary circuit,
18. in steam generators use of headers immersed below the water level to improve the working conditions of the header material,
19. ensuring 100% ultrasonic testing of all welds in the reactor vessel,
20. use of "vented" spacer boards for heat-exchange tubes in the steam generator to reduce the danger of accumulation of deposits at the spacer sites.

Incorporation of the features mentioned above will result in a reactor plant of a higher reliability than the existing and improved VVER-1000.

The work carried out now on the VVER-1800 design project shows the following:

1. The increase in core dimensions will lead to a more efficient fuel utilization (~ 10% reduction in the fuel component) than in the improved VVER-1000;
2. The specific metal content in the equipment of the VVER-1800 reactor plant is 20% lower than in the current VVER-1000 and ~ 10% lower than in the improved VVER-1000 (3200 MWt).

According to the evaluations made, the following reductions are expected in units with VVER-1800, as compared to those with VVER-1000:

1. 12-15% in the specific requirement of metal in the structural part of the main building,
2. 15-20% in the specific volume of the main building,
3. 15-20% in the specific requirement of reinforced concrete,
4. 15-20% in the specific requirement of metal in the civil engineering structures,

5. 15-18% in specific investment,
6. 15-20% in the specific number of staff at the power plant,
7. 20-25% in specific labour input.

3.8 COMBUSTION ENGINEERING SYSTEM 80 PLUS [59-61] (USA)

3.8.1 System 80 Standard Plant

Combustion Engineering System 80 Nuclear Steam Supply System (NSSS), currently in operation at the Palo Verde nuclear generating station, is approved by the U.S. Nuclear Regulatory Commission as a standard design.

TABLE 3.8.1
MAIN PARAMETERS OF SYSTEM-80 NSSS

Core power MWt	3800
Number of fuel assemblies	241
Active length of core m (in)	3.810 (150)
Power density, kW/L	95.9
Fuel assembly dimensions mm	202.7 x 202.7
(in)	(7.98 x 7.98)
Number of fuel rods per assembly	236(16 x 16)
Fuel rod o.d. mm (in)	9.7 (0.382)
Clad thickness to o.d. rate	6.5×10^{-3}
Maximum linear power density kW/m (kW/ft)	41.0 (12.5)
Average linear power density kW/m (kW/ft)	17.06 (5.2)
H_2O/UO_2 volume ratio	2.02
Specific power kW/kgU	37.0
Number of control rod drives	89
Number of control element fingers	708
Primary system pressure bar (psia)	155 (2250)
Reactor coolant average temperature ^oC (^oF)	312 (594)
Coolant flow rate m^3/h (gal/min)	101 205 (445 600)
Maximum core heat flux W/cm^3 (Btu/hft^3)	134 (424 400)
Minimum DNBR	2.13
Secondary steam pressure bar (psia)	74 (1070)

The main parameters are listed in Table 3.8.1. The design contains two steam generators and four primary pumps. A number of important features for System 80 are the following:

- Digital protection and monitoring systems. Core monitoring and protection is performed by digital minicomputers in a two-out-of-four logic. This, together with a fixed in-core detector system, allows the plant operator to optimize fuel burn-up and provides him with the maximum margins to the plant operating limits during transients and load-changing operations.
- Human-engineered control center. The Nuplex 80™ control center provides an advanced main control room which makes use of solid state systems and computerized color CRT displays. It provides a completely integrated instrumentation and control design philosophy for both NSSS and balance-of-plant processes and systems.

- All-Zircaloy, reconstitutable fuel structure. The fuel assemblies use all-Zircaloy cladding and grid structures to maximize fuel economy, resulting in lower enrichments. Furthermore, the fuel assemblies are reconstitutable to facilitate repair in the unlikely event that a defect develops.
- Long fuel cycle. The design currently licensed in the U.S. is based on an 18-month fuel cycle to maximize fuel burnup and minimize refueling shutdowns. C-E has developed the capability for even longer cycles in the future.
- Full-load rejection capability. The reactor power cutback system selectively inserts control rods (following a large load rejection/turbine trip or a feedwater pump trip) to avoid reactor trip. Besides improving plant availability, the system reduces turbine bypass and condenser capacity needs, thereby saving initial capital investment.
- Large-diameter control rods. Consistent with earlier C-E designs, System 80 has a large-diameter control rod design which uses the location of four fuel rods in the core. This provides high shutdown rod worth, while reducing the number of rods.
- Individual control rod shrouds. The use of large-diameter control rods allowed C-E to develop an Upper Guide Structure (UGS) design that provides individual shroud tubes for each control rod above the reactor core (Fig.3.8.1). This feature together with the innovative 12-finger Control Element Assembly (CEA) design results in an almost unlimited selection of control rod locations in the core (Fig.3.8.2). The flexibility afforded by this feature produces such benefits as reduced refueling time (control rods are removed with the UGS) and can provide an all-plutonium recycle capability in the future.

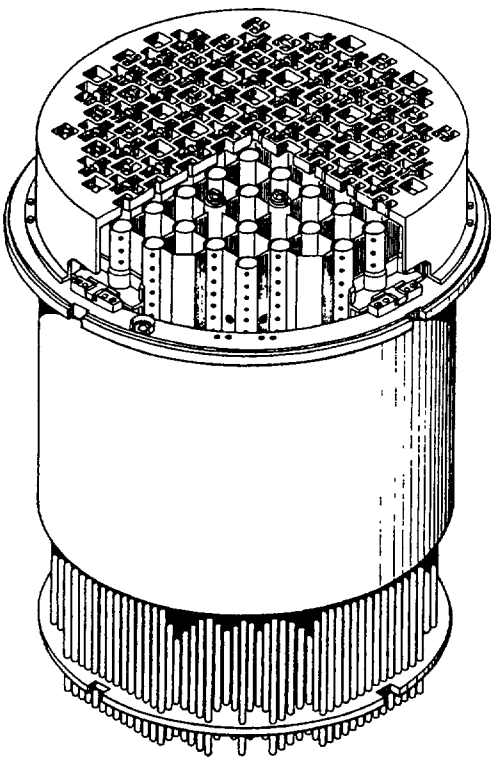

FIG.3.8.1. Upper guide structure assembly.

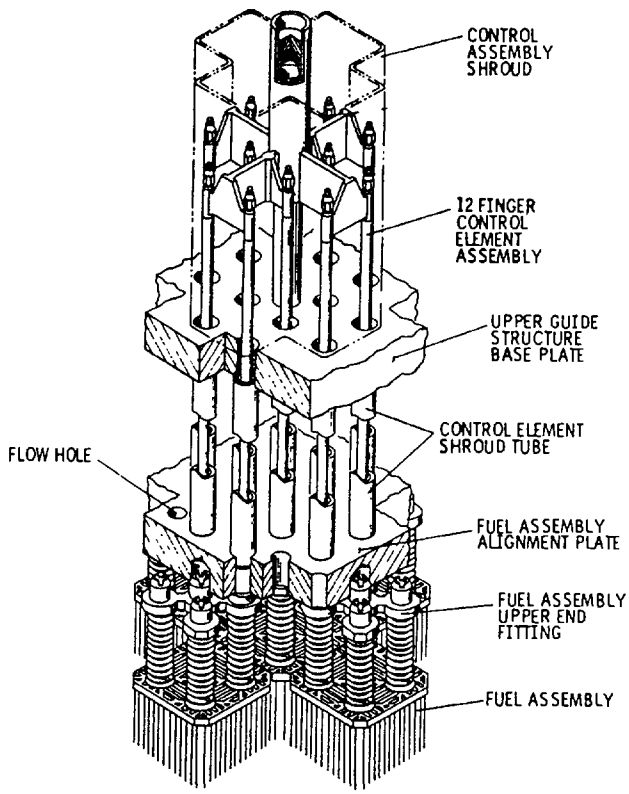

FIG.3.8.2. Fuel/control element/upper guide structure interface.

- Elimination of pipe whip restraints. The NRC has approved the removal of restraints from the design. This means lower costs and reduced personnel exposures during maintenance outages.
- Lower head, High-Pressure Safety Injection (HPSI). The design uses a HPSI system for which the pump shut-off head is lower than the primary safety valve settings. This feature eliminates the potential for unnecessarily challenging plant safety when the HPSI system is actuated.
- Lowered core position in reactor vessel. Lowering the core position reduces radiation fluence in the nozzle region and improves small break LOCA performance.

3.8.2 System 80 Plus

System 80 Plus is an enhanced version of standardized design-System 80 in order to meet utility needs for the 1990's. The enhancement will incorporate features to address new licensing issues and improved safety including compliance with severe accident policy; improved overall performance including
operability, availability and maintainability; and plant simplification and cost reduction. The final design features will be developed over the next few years. The enhanced features that are currently being evaluated are summarized in Table 3.8.2.

TABLE 3.8.2
SYSTEM 80 PLUS ENHANCEMENT FEATURES

I. REACTOR

1. Increased overpower margin
2. Maneuvering control without soluble boron
3. Ring-forged reactor vessel*
4. Reduced T_h
5. Advanced burnable absorber*
6. Control rods with longer design life

II. REACTOR COOLANT SYSTEM

1. Larger pressurizer*
2. Increased SG tube plugging margin*
3. Increased secondary inventory*
4. Improved access for SG maintenance*

III. ENGINEERED SAFETY SYSTEMS

1. 4 train safety injection
2. Direct vessel injection with single pump per train
3. In-containment refueling water storage tank
4. 4 train emergency feedwater system
5. Safety depressurization system
6. Higher pressure shutdown cooling system

IV. AUXILIARY SYSTEMS

1. Non-safety CVCS (chemical and volume control system)
2. Centrifugal charging pumps
3. Two-stage letdown

V. INSTRUMENTATION AND CONTROL SYSTEMS

1. Advanced control center (Nuplex 80)
2. Digital protection system*
3. Improved data communication (multiplexing)
4. Microprocessor-based component control
5. Alarm and indication reduction

* Included in KNU 11 and 12

3.8.2.1 Reactor

One of the primary indications from utilities through the EPRI ALWR programme has been the desire for increased operating margin. The current limiting factor in operating margin is the margin available to CHF (critical heat flux) within the reactor monitoring system. By reducing normal operating hot leg temperature and revising monitoring methods, the System 80 Plus design will increase the operating margin.

Also, in response to utility requests to simplify reactivity control during power load changes, the System 80 Plus design will provide for reactivity control with control rods only. A revised CEA (control element assembly) pattern for rodded manoeuvering control uses an increased number of full length Inconel Part-Strength CEAs (Fig.3.8.3) and eliminates Part-Length CEAs used in the current System 80 design. Optimizing the CEA pattern to accomplish this function indicates that the System 80 Plus will require 4 additional CEDMs (control element drive mechanism) and vessel head nozzle locations in order to implement the requirement for rodded manoeuvering control and maintain a high degree of shutdown margin.

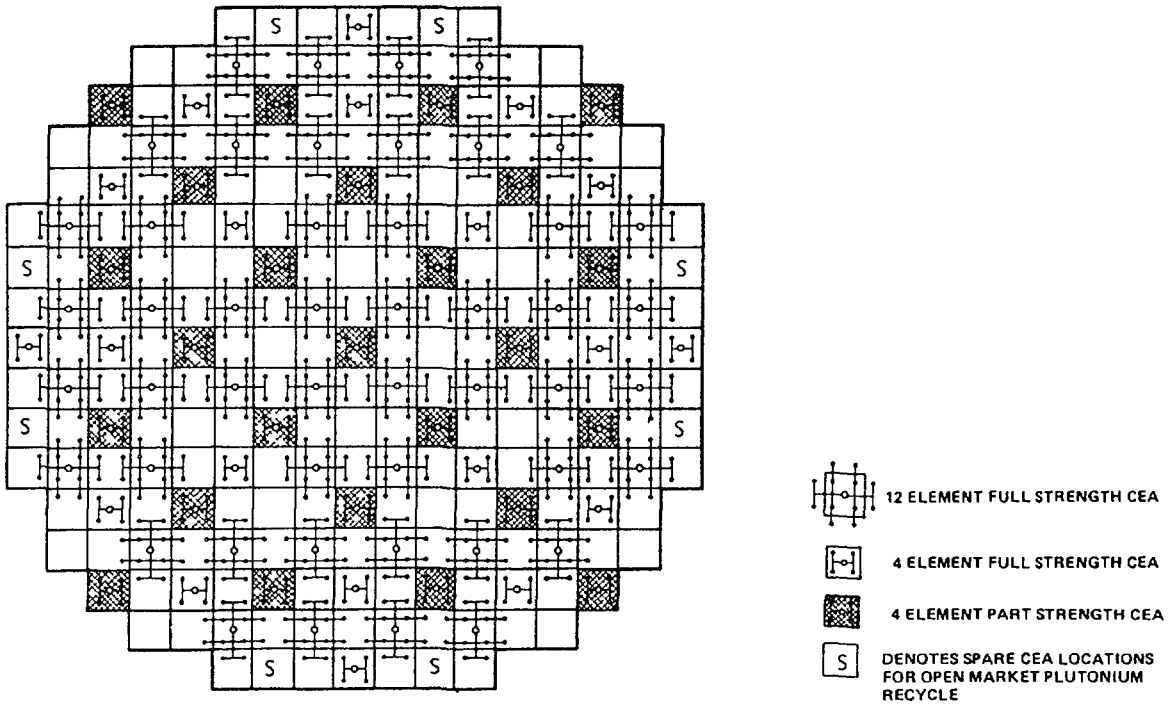

FIG.3.8.3. Control element assembly locations.

The enhanced design will also contain the capability to incorporate extended fuel burnup and gadolinia-urania burnable absorber, although the initial core design will not need to be changed. The specific benefits of reduced hot leg temperature Th are increased DNB margin, reduced fuel cladding waterside corrosion, and a reduced moderator temperature defect (increases shutdown worth slightly for cooldown events). The Reactor Vessel will be ring-forged with material specifications that result in an end of life ^{RT}NDT well below the current NRC screening criteria.

3.8.2.2 Reactor Coolant System

The Reactor Coolant System (RCS) will not be significantly modified, but certain key changes are being incorporated. The System 80 Plus RCS is arranged as two closed loops connected in parallel to the reactor vessel (Fig.3.8.4). Each loop consists of one 42-inch (106.7 cm) i.d. outlet (hot) leg, one steam generator, two 30-inch (76.2 cm) i.d. inlet (cold) legs, and two pumps. An electrically heated pressurizer is connected to one of the loops. The System 80 Plus design will have an increased pressurizer volume to enhance transient response. On a per-megawatt basis the volume of the pressurizer will increase about 33%.

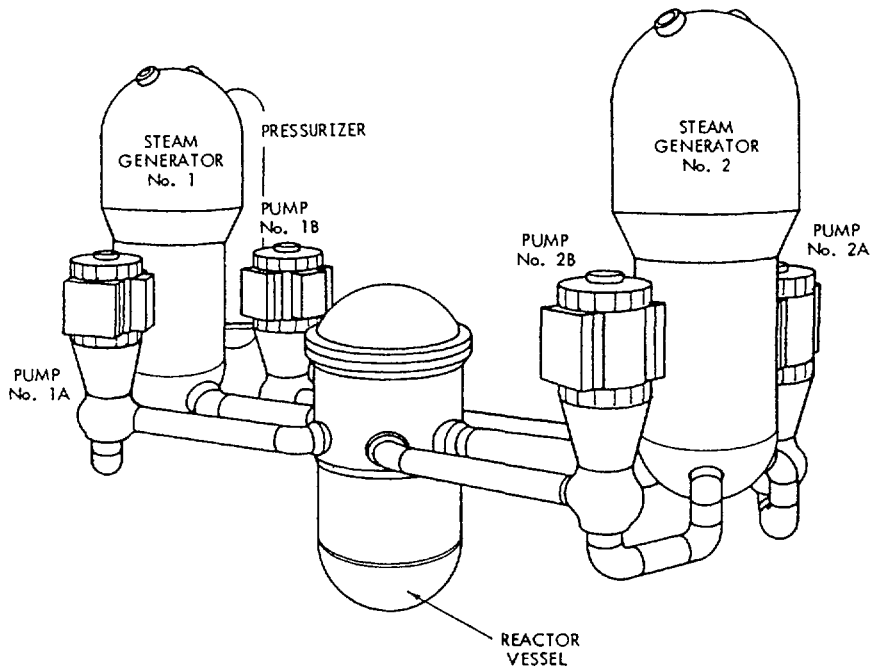

FIG.3.8.4. Isometric view of the reactor coolant system.

The System 80 Plus steam generator will incorporate several design enhancements, including better steam dryers, increased overall heat transfer area, and a slightly reduced full power steam pressure. The steam generator will also have a larger secondary feedwater inventory which extends the "boil dry" time, thus enhancing the NSSS's capability to tolerate upset conditions and improve operational flexibility. Finally, the steam generator design will have a greater heat transfer area, thereby permitting the NSSS to maintain rated output with a significant number of tubes plugged.

3.8.2.3 Engineered Safety Systems

The most significant changes to the System 80 design being considered are in the Engineered Safety Systems. These systems are being reworked to provide a design that can meet the NRC and utility demands for greater safety and investment protection. In particular, the Safety Injection System (SIS) is being revised to provide a simpler, more reliable and better performing system. The enhanced System 80 SIS incorporates:

- Four train safety injection
- An in-containment refueling water storage tank
- Direct vessel injection

The SIS utilizes four 50% capacity safety injection pumps which will be used for both "low pressure" and "high pressure" injection of borated water into the reactor coolant system. This eliminates the requirement for Low Pressure Injection System components and associated cross-connect with the Shutdown Cooling System. In addition, four Safety Injection Tanks are also provided as part of the SIS.

Direct vessel injection eliminates the need to provide allowance for spillage of one train due to a postulated break. This in turn allows the sizing of pumps to incorporate both the low pressure and high pressure delivery function. By employing an in-containment refueling water storage tank, reliance on automatic or manual switch over of suction following a postulated break can be eliminated.

In addition to the SIS changes, two additional Safety Systems are being added to the System 80 Plus Design Scope: (1) the Emergency Feedwater System and (2) the Safety Depressurization System.

The Emergency Feedwater System (EFWS) is a dedicated safety system that is designed to perform the following functions:

1. Supply feedwater to the steam generators for the removal of heat from the RCS in the event the main feedwater system is unavailable following a transient or accident.
2. Supply feedwater to the steam generators for the removal of heat from the RCS in the event of a total loss of AC power (plant blackout).

The EFWS is comprised of four pumps and associated piping and valves. Two pumps are motor driven and two are steam turbine driven. The EFWS is actuated automatically.

The Safety Depressurization System (SDS) is a dedicated safety system designed to perform the following functions:

1. Provide a safety grade means to depressurize the RCS.
2. Provide a capability to rapidly depressurize the RCS to initiate a primary system feed and bleed for the beyond-design-bases-event of a total loss of feedwater.

The system includes the valves and piping which establishes a flow path from the pressurizer steam space to the In-containment Refueling water Storage Tank (IRWST). It is manually actuated and controlled.

Finally, the Shutdown Cooling System (SCS), which is used to reduce the temperature of the reactor coolant at a controlled rate to a refuelling temperature of approximately 140°F (60°C) and to maintain the proper reactor coolant temperature during refueling, is being modified. This system utilizes the shutdown cooling pumps to circulate the reactor coolant through two shutdown heat exchangers, returning it to the reactor coolant system. The shutdown cooling system for System 80 Plus is being upgraded to a nominal design pressure of 900 psia (62 bar). This higher system pressure provides for greater operational flexibility and simplifies concerns with system over-pressurization. The SCS pumps do not share functions with the SIS.

3.8.2.4 Auxiliary Systems

The Chemical and Volume Control System (CVCS) for System 80 Plus incorporates several significant improvements and simplifications including the following:

1. reclassification as a non-safety grade system by transferring of previously credited safety functions to other dedicated safety systems,
2. downgrading of all CVCS components outside of containment (except containment isolation valves) to a non-nuclear safety class,
3. improved letdown configuration,
4. improved charging configuration.

Transferring of previously credited safety functions to other dedicated safety systems permits simplification of the CVCS without increasing overall plant complexity. This permits elimination of redundancy for the purpose of providing single failure protection as well as simplification of power and qualification requirements. In addition, all components in the system (with the exception of the containment penetrations and containment isolation valves) can be designed, purchased, and constructed to non-nuclear safety criteria. Although not a safety grade system, the System 80 Plus CVCS provides reliable makeup and depressurization capabilities for defense in depth and ease of operation.

The System 80 Plus employs an improved letdown configuration of which key elements are (1) a full pressure letdown heat exchanger, and (2) pressure reduction to CVCS operating pressures downstream of the letdown heat exchanger by use of a letdown flow control valve in series with a letdown orifice. In addition, the charging flow is controlled by the use of centrifugal charging pumps and a charging pump flow control or throttle valve on the discharge of the pumps.

3.8.2.5 Instrumentation and Control Systems

The System 80 Plus Instrumentation and Control System includes the Nuplex 80 Plus Advanced Control Complex which is comprised of the following major systems: the Data Processing System, Control Center Panels, the Digital Plant Protection System, and the Digital Component Control System.

3.8.2.5.1 Data Processing System

The Nuplex 80 Data Processing System (DPS) configuration is composed of two major subsystems: the Plant Data Acquisition System (PDAS) and the Plant Monitoring and Display System (PMDS). Plant data is acquired through PDAS and is transmitted the PMDS. The PMDS provides operator-oriented CRT displays in the Main Control Room and CRTs for the shift supervisor, technical support center and emergency off-site facility.

The PDAS provides fast, efficient, and reliable signal transmission from plant process sensors and other Nuplex 80 systems to the PMDS over a minimum number of cable sets. The PDAS is segmented into four separate and independent loops. Each loop consists of a communication station which supports data links and signal multiplexers which communicate over a high speed reconfigurable data highway. Loop segmentation increases the throughput capacity and expansion capability of the system.

The PMDS receives input data from PDAS and displays plant operational status and alarms to the operator. The PMDS also provides the NSSS and BOP (balance-of-plant) performance calculations, overall plant status monitoring and logging, post trip review and sequence of events monitoring, operator interface and CRT presentation of status and results data, and hard-copy documentation of plant results. Multi-color CRT displays, driven by redundant, high-speed minicomputers, present the plant information to the operator. The display formats are designed to permit rapid operator comprehension of information necessary to monitor, control, or diagnose plant conditions.

3.8.2.5.2 Control Center Panels

The Nuplex 80 Plus Main Control Room consists of a Master Control Console (MCC) Auxiliary Control and Safety Center Console (ACSC) and a Supervisory Monitoring Console (SMC). The SMC provides CRT monitors driven by the DPS which allow the control room supervisor to monitor plant-wide conditions. The MCC is designed for the control of primary steam and power generation systems. The ACSC is designed for the control of supporting systems and all plant safety systems.

Both control consoles integrate qualified indication and conventional alarm windows with color graphic CRTs. The indicators and alarm windows provide information that supports the detailed data presented on the CRTs. This information enhances operator-CRT interaction and also provides sufficient information to minimize the impact to plant operations due to loss of the DPS. The design is supported by functional task analysis that considers all operating modes under normal and equipment failure conditions.

3.8.2.5.3 Digital Plant Protection System

The Plant Protection System consists of measurement channel sensors, Digital Core Protection Calculators (CPC), and the Digital Plant Protection System (DPPS) cabinets. The Digital Plant Protection System Cabinets contain logic for both the Reactor Protection System (RPS) and the Engineered Safety Features Actuation System (ESFAS). The system consists of four independent channels that can be physically segregated for fire protection.

The DPPS bi-stable trip unit receives input signals from the RPS/ESFAS measurement channels and from the Core Protection Calculator. The trip outputs of the bi-stables are input to the two-out-of-four local coincidence logic (LCL). The LCL outputs are organized into indication paths that include the final actuation logic for tripping the reactor trip circuit breakers and actuating components for the engineered safety features systems. The DPPS is a complete digital design which includes automatic on-line testing and diagnostics.

3.8.2.5.4 Digital Component Control System (DCCS)

The Digital Component System provides the control logic for all two-state plant components (e.g., pumps, valves, fans, heaters, circuit breakers, etc.). The system consists of four independent safety channels and one non-safety channel in a rugged configuration that may be distributed throughout the plant to enhance fire protection and minimize field cable runs.

3.8.2.6 Containment

The containment vessel will be a free-standing, low leakage, welded, steel pressure vessel consisting of a complete sphere approximately 200 ft (60 m) in diameter, fabricated using 1.5-in (38.1 mm) thick steel plate. The sphere will be supported by encasing the bottom portion of the shell between the base slab of the internal concrete structure and the base slab of the concrete shield building. There will be no structural connection either between the containment and the internal structure, or between the containment and the shield building.

In using the complete sphere, the steel shell retains all of the membrane loads induced by internal pressure, and eliminates complicated anchorage systems, post-tensioning systems and concrete reinforcement congestion. The steel sphere is the primary containment and, therefore, the shield building is a relatively light reinforced concrete structure and is not exposed to the major membrane loads associated with the loss-of-coolant accident.

The spherical containment system provides these definite advantages:

1. An economical solution for the dual containment requirement.
2. The most economic geometric shape, and the most economic use of containment materials for a given containment volume.
3. The most usable volume inside the containment (under the polar crane elevation) and the most usable operating area for the operating deck.
4. Retention of the internal pressure membrane loads within the spherical shell without transfer to the adjacent structure or foundation.
5. A convenient means of separation of equipment, piping and electrical cable tray systems into distinct and separate safety trains and locations in the annulus area.
6. Optimum location of safety equipment under the sphere to eliminate excessive runs of safety piping and electrical trays. Use of the annular volume under the sphere inside the shield building results in a direct reduction in the radwaste structure volume requirements.
7. 360° access to the containment vessel for locating penetrations and accessing the containment. It also provides for addition and deletion of penetrations after the containment shell has been erected.
8. Upon completion of construction of the main base mat and the lower dish of the spherical shell, the interior structure, containment vessel, and shield building cylinder can be constructed independently. This is a considerable advantage, especially for multi-unit sites, because the construction efforts on one or more structures can be adjusted to complement another structure.
9. Large enough containment interior to accommodate a concrete structure around the primary loop and associated equipment, while still providing sufficient volume and vent areas to reduce compartment pressures in case of pipe rupture. This structure also provides support for the polar crane, internal missile protection for the containment vessel, and eliminates pressure transients on the containment vessel shell.

3.9 MITSUBISHI-WESTINGHOUSE (M-W) APWR DESIGN [62] (JAPAN-U.S.A.)

The Westinghouse-Mitsubishi (M-W) APWR development has been completed. The intermediate design has been completed. Testing of the core, reactor, and steam generator components have been performed in Japan and the USA. These tests have also been completed.

3.9 1 Reactor Core

The reactor core provides 3823 MWt with an increased safety margin. The fuel assembly is a 19 x 19 fuel rod array with 16 larger thimble tubes to accommodate control rods, grey rods, and/or the water displacer rods. Although the number of fuel rods was increased to raise the thermal output, the number of fuel assemblies in the reactor core was kept at 193, as in the conventional 4 loop PWR plant, by using larger size assemblies so that the refueling time could be kept at the same level. The larger core size results in a low power density core which improves uranium utilization by decreasing doppler absorption, reducing the xenon poisoning effect, and reducing neutron leakage.

The spectral shift control system uses water displacer rods which have lower neutron absorption characteristics. The water displacer rods are inserted in the core during the first part of the core cycle, partially displacing about 15% of the moderator water. Approximately two-thirds of the way through the cycle, the water displacer rods are withdrawn. This action cause the reactivity to increase by shifting the neutron spectrum more into the thermal range. Zircaloy is used for the fuel assembly middle grids instead of Inconel. By increasing the number of grids and the thickness to the diameter ratio of the fuel rod cladding and the grid thickness, the mechanical strength of the fuel assembly was improved. The grid structure is improved with a longer skirt grid and a newly designed bottom nozzle. Around the core, a stainless steel radial reflector is used to decrease neutron leakage and improve fuel utilization.

All improvements mentioned above make continuous operation over a period of 13.5 EFPM (Effective Full Power Month) feasible with an enrichment of about 3%, which is lower than that of present PWRs. Fuel cycle cost reduction of 20%, savings of 23% in uranium resources and 30% in separative work (enrichment) have been achieved. These savings are obtained through the low power density core, Zircaloy grids, spectral shift control, and the radial reflector. The APWR core also has the capability of operation with recycling of self-generated Pu. Loading of Pu fuel throughout the entire core is also possible by replacing some of the grey rods with additional control rods.

3.9.2 Instrumentation and Control Systems

The control system is designed to provide daily load following operation for 14-1-8-1 hours (100% - 50% load change) and $\pm$ 5% AFC, $\pm$ 3% GF almost over the entire plant life. To provide daily load following operation, a combination of control rods, grey rods and changes in reactor coolant temperature are used. This control system reduces fuel cost and significantly reduces or eliminates boric acid water reprocessing. The long life control rod drive mechanisms and related equipment are developed.

The instrumentation and control system uses microprocessors, multiplexing, fiber optics, and CRT displays. The protection system is composed of 4 independent channels with automatic on-line tests of one channel and self-diagnostic capability. The status of all sensors is

communicated to the plant computer for diagnostic and display. The DNBR and linear power density are directly calculated.

The control system is designed with a duplex digital data processing system. A data transmission system is used with optical fibers. The control board is designed to reduce human error and operator work load through systematic introduction of human engineering concepts. The operator's recognition pattern based on human engineering is considered for the arrangement of equipment on the board. The control board is divided into the main control board, NSSS auxiliary board and the T/G (turbine/generator) auxiliary board. The main control board and the auxiliary board are functionally divided according to the functions based on different operational modes in order to reduce frequency and distance of operator's movements both in normal and accidental operation.

The secondary system is also designed with features that enable transfer from 100% load operation to station load operation and three-phase reclosing operation in a power grid system accident.

3.9.3 Nuclear Steam Supply System and Turbine Generator

Core Internals and Reactor Vessel

For reactor core internals, the upper calandria was used to protect the control rods from coolant cross-flow. The displacer rods are driven by a newly designed hydraulic drive mechanism using the pressurized primary coolant as the working medium. The length of the reactor vessel was increased by about 3 m. The coolant nozzles are much higher above the core. The reactor vessel is made of forged materials with welding lines kept away from the core area (see Fig.3.9.1). The head part of the reactor vessel is further integrated than with the conventional PWR to reduce the periodic inspection time and occupational radiation exposure.

Steam Generator

The further improvement of steam generators is to enhance the reliability of the heat transfer tubes. Thermally treated low-cobalt Ni-Cr-Fe Inconel alloy (TT-690 alloy) was selected as the material of heat transfer tubes. This alloy shows sufficient resistance against various types of corrosion, such as SCC (stress corrosion crack), thinning, pitting, IGA, etc. A plain tube and flat land structural broached tube support plate with improved geometry is adopted to avoid the concentration of impurities. A ribbed tube concept is developed as a backup design, and shows excellent characteristics to minimize the buildup of chemical concentration at the tube support portion. The newly designed mud drum concept for sludge removal is adopted.

To obtain higher heat transfer performance with more compact dimensions, 3/4 inch (1.9 cm) small-sized tubes were adopted. The tube bundle U-bend portion was to be tested on the vibration table to confirm that it has enough resistance in high seismic conditions.

Turbine Generator

The turbine generator uses highly efficient 52 inch (132 cm) blades for the final stage of the low pressure turbine. With a somewhat larger steam generator and operation at 625°F (329.4°C)(hot), 35% gross plant efficiency was obtained.

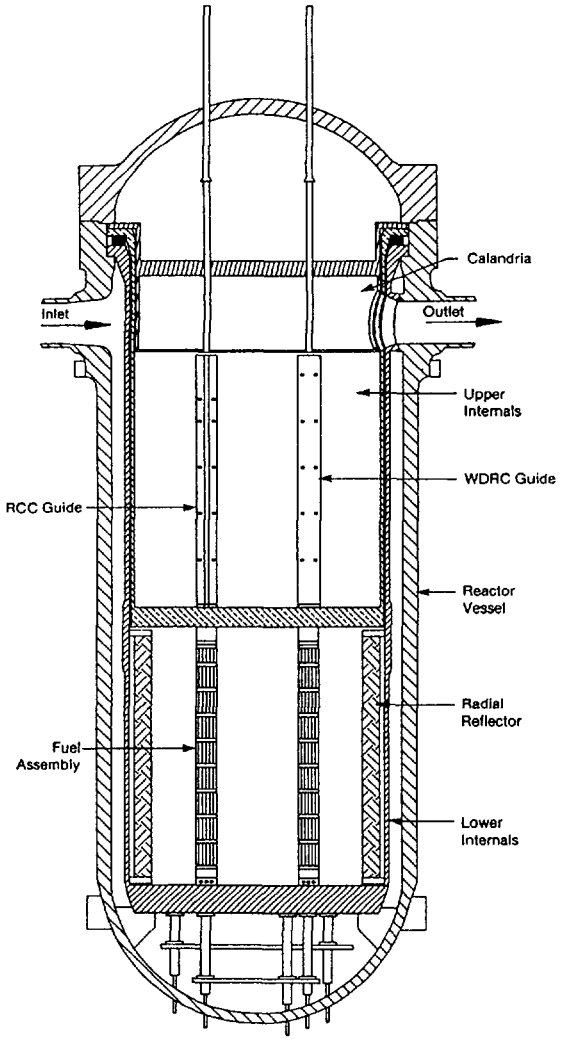

FIG.3.9.1. APWR reactor.

3.9.4 Engineered Safety Systems

The engineered safety systems have been improved by conducting a cost-benefit evaluation to ensure well balanced design as regards operational capability, reliability and safety. The primary side safeguard system adopted completely separated 4 independent mechanical subsystems.

The low head core reflood tank is installed as a passive component for low head injection and the low head injection pump is eliminated. A residual heat removal pump is used also as the containment spray pump, so that a two-type-pump system is used instead of the three-type-pump system. An emergency water storage tank is installed inside the containment to eliminate the need for operator action at the start of the recirculation phase following a LOCA. The schematic flow diagram of the primary side safeguard system is shown in Fig.3.9.2.

The secondary side safeguard system uses the 2-train and 4-subsystem concept by complete separation of the 2 trains, as shown in Fig.3.9.3. In each train, a turbine driven auxiliary pump and a motor driven auxiliary pump are adopted. The electric system, including the diesel generator, remains as a 2-train system, because the 4-train electric system results in a very large increase in cost compared with few benefits.

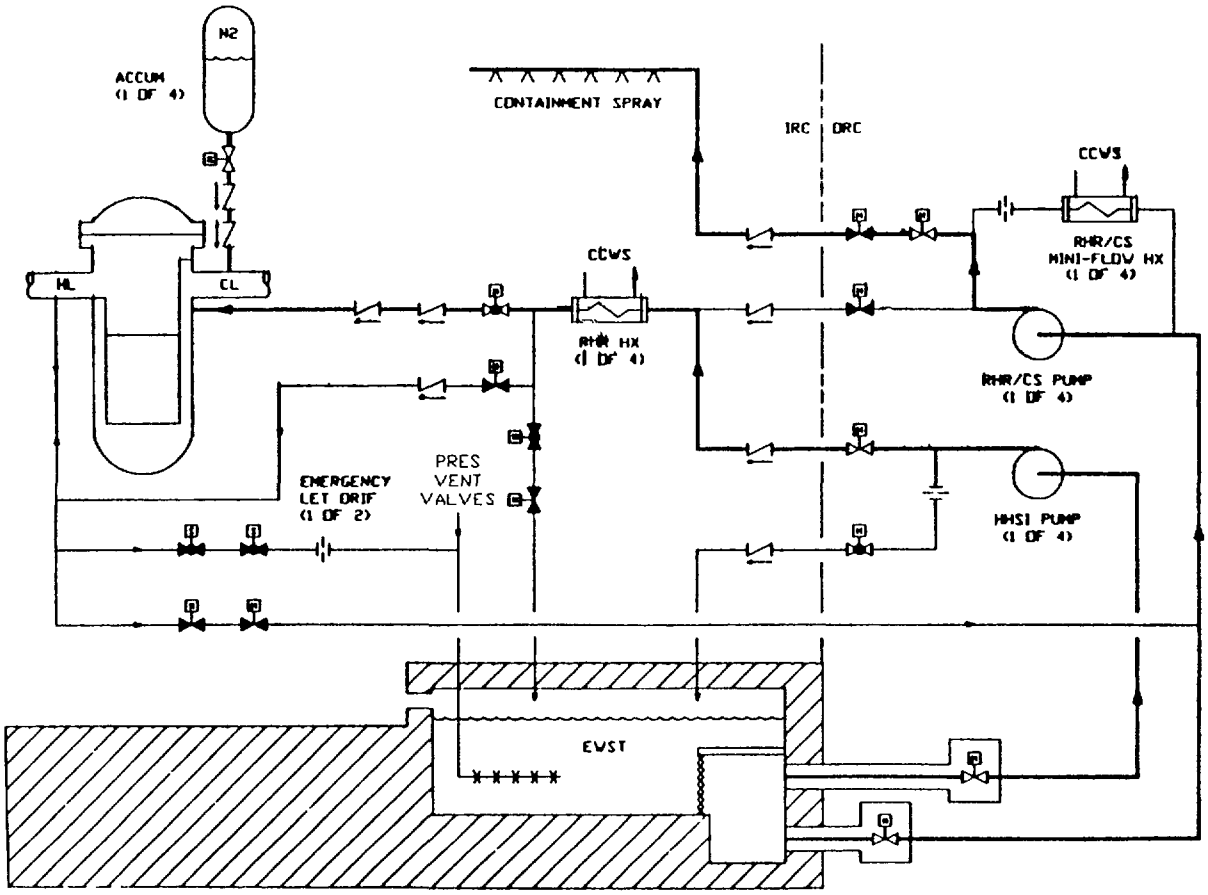

FIG.3.9.2. Primary side safeguard system.

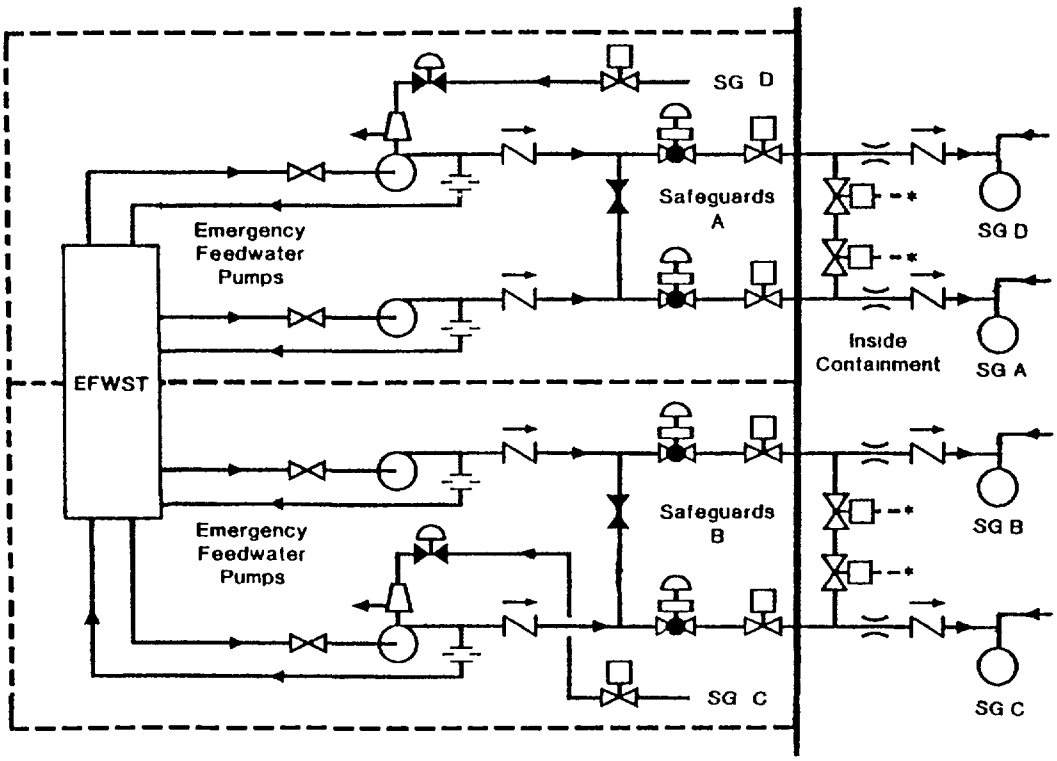

FIG.3.9.3. Emergency feedwater system.

3.9.5 The Improvements of other Systems and Components

The Chemical and Volume Control System (CVCS)

The CVCS is designed as a control system which is separated from the safety system. A diesel driven backup seal water injection pump is used to prevent seal damage for the reactor coolant pump in case of complete loss of AC power. The letdown flow rate is increased to reduce radiation sources.

The containment vessel is a large 197 ft (60 m) diameter steel spherical shell. This approach leads to additional space for maintenance and improved working conditions for construction. A spherical shell provides more volume per unit weight/cost of structure compared to a cylindrical shell.

A pressurizer with larger volume is being supplied to provide for full load rejection without actuating pressure relief valves.

The comparison of APWR loop configuration with PWR's and design simplification of using in-containment emergency water storage tank are shown in Fig.3.9.4.

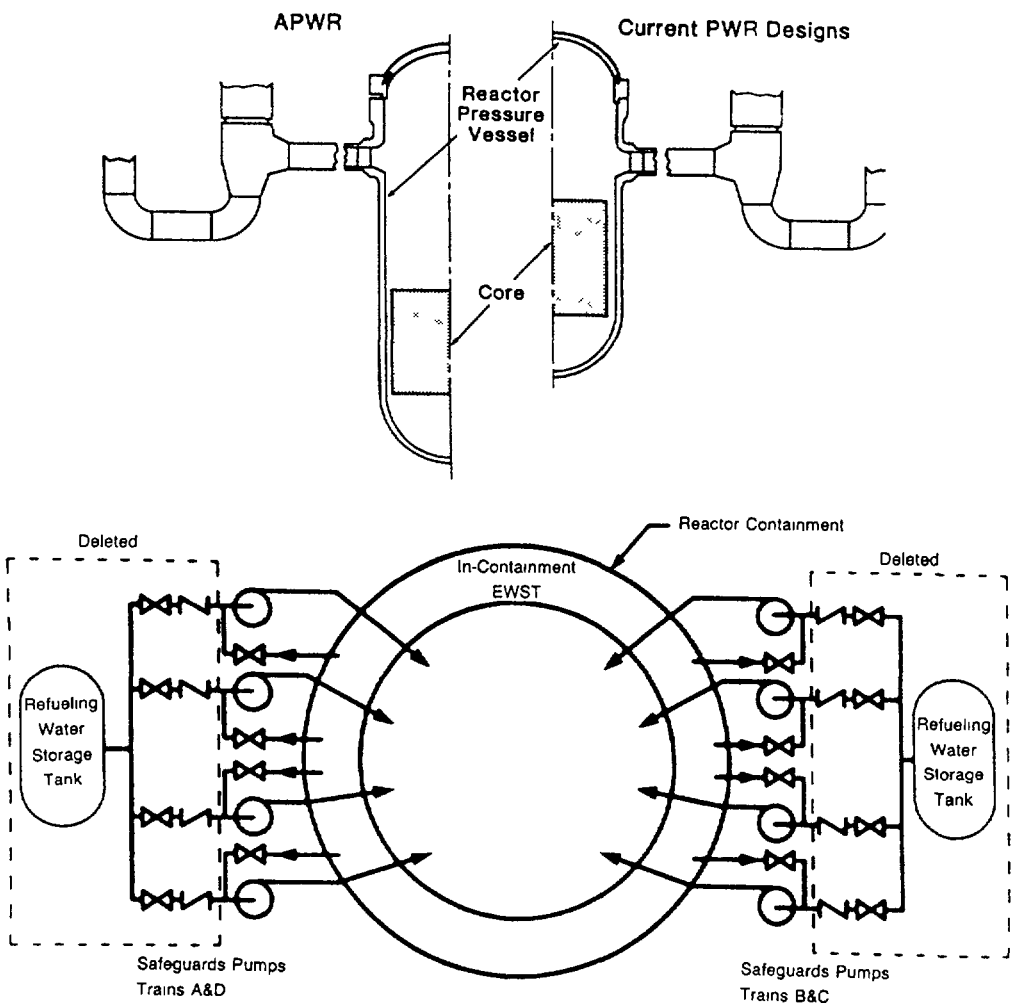

FIG.3.9.4. Loop configuration comparison and design simplification: in-containment emergency water storage tank.

3.9.6 Cost Considerations

In addition to the reduction of the electricity unit cost achieved by the increase of rated electrical output (1350 MWe), the reduction of fuel cycle cost, increased availability etc., an extensive cost reduction effort was made during the development of APWR using the methods of VA/VE. Features which contribute to a reduced cost include:

- rationalization of components, equipments, and systems,
- simplified fluid systems designs,
- elimination of some systems, e.g., some boron systems may be eliminated or reduced in scope,
- elimination of safety-system interconnections,
- multiplexing the instruments and controls,
- consolidation of functions,
- benefits of scale of 1350 MWe plant relative to smaller current plants.

The fuel cycle cost target for APWR is a 20% reduction from present cost levels. This appears to be achievable from the spectral shift control and the use of reflectors.

A plant availability target of 90% is to be achieved by the following means:

- refueling cycle extended to 18 months,
- refueling/maintenance outage reduced from 75 days (typical for Japan) to 45 days through extensive automation of fuel handling, fuel inspection and steam generator inspection,
- improved steam generators and reactor coolant pumps,
- more rugged fuel assemblies,
- systematic improvements in fluid and instrumentation and control systems,
- full-load rejection capability (further reducing the low Japanese occurrence of trips),
- on-line testing and calibration of instruments.

3.9.7 Safety Considerations

The overall safety philosophy of the APWR is similar to that of earlier four-loop Westinghouse designs such as SNUPPS (Standardized Nuclear Unit Power Plant System) but the details have been substantially strengthened, as follows:

- The increased volume of primary coolant in the reactor vessel above the core increases the time available to deal with loss of coolant.
- Lower core power density increases safety margins.
- There are four complete trains of mechanical equipment in the safeguard system.
- A large emergency water storage tank is provided inside containment as the water source for four safety injection pumps.
- Four emergency feedwater pumps are provided, two of them steam turbine driven.
- An automatic SG overfill protection system is provided.
- Safety and control systems are separated to increase reliability and reduce common-mode failures.
- The control room is improved, with improved diagnostic capabilities.

- The larger pressurizer and core provide for improved response to transients.
- The large dry containment vessel is conservatively designed.
- The steam generator secondary side water inventory is controlled automatically.
- There is injection of pressurized water to reactor coolant pump seals independent of off-site and on-site emergency AC.
- The reactor vessel neutron fluence is reduced.
- The overall improvements in plant availability, reliability, and maintainability translate into improved safety.

The improved safety protects not only the public but also the utility investor. Westinghouse has performed a comparative PSA (probalistic safety assessment) of the APWR and a conventional PWR for internal events. The results are shown in Table 3.9.1. The reported total core melt frequency from internal events is 1.5 x 10^{-6}/reactor yr, which is close to Westinghouse's target of 1 x 10^{-6}/reactor yr overall risk from the APWR. External event analysis, which is site specific, will be carried out later.

TABLE 3.9.1
APWR CORE MELT FREQUENCY

EVENT	FREQUENCY (PER YR.)	CORE MELT FREQUENCY APWR	CURRENT PWR
Transients	10	1.6E-7	6.1E-6
Blackout	0.12	8.0E-7	2.5E-5
SG tube rupture	0.03	2.1E-8	3.2E-6
Steamline rupture	8E-4	3.0E-9	0.9E-9
Small LOCA	6E-3	2.0E-8	6.0E-6
Large LOCA	4E-4	2.2E-8	2.7E-7
ATWT	3E-4	5.5E-8	1.4E-7
Loss cooling	2E-5	3.4E-7	1.1E-5
Interfacing LOCA	1E-6	5.6E-9	1.0E-6
Vessel rupture	1E-7	1.0E-7	1.0E-7
		---	---
		1.5E-6 per yr	5E-5 per yr

The APWR has a target of an occupational exposure of 1 manSv/yr, well below the levels experienced at Japanese PWR plants in the past and even farther below U.S. experience. The plant features to achieve this target are as follows:

- fewer refueling/maintenance outages,
- use of low-cobalt materials, especially in steam generator tubing,
- more reliable equipment,
- greater use of automation in inspection and steam generator tube repair,
- better plant layout, greater accessibility for maintenance and use of shielding.

3.9.8 Licensing Considerations

Westinghouse has been pursuing the licensing objectives of preliminary design approval by NRC for the APWR in 1988 and final design approval by 1991 through rulemaking. At that point, a standard "nuclear power block" design would be preapproved, together with complete specification of residual safety interface requirements.

Currently, the NRC staff and the ACRS (Advisory Committee for Reactor Safeguards) are involved reviewing "modules" of the APWR. These modules (of which 16 will constitute the complete nuclear power block) address interface requirements in each case. The sum of the 16 modules, with some connecting language, will constitute a Preliminary Safety Analysis Report. In total, Westinghouse will address all applicable NRC regulations, TMI issues, unresolved safety issues, generic issues, the proposed severe accident policy, and will include a PSA. In the event of a firm plant order, the detailed plant design would result in a Final Safety Analysis Report and an NRC-approved standard design.

3.10 HITACHI-TOSHIBA-GE ABWR [63,64] (Japan-U.S.A.)

The ABWR has been developed jointly by General Electric (GE, U.S.A.), Hitachi and Toshiba (Japan). The main features of the ABWR are advanced fuel, internal recirculation pumps, fine-motion CRD (Control Rod Drives), digital and solid state control, multiplexing, improved reinforced concrete primary containment and reactor building and three ECCS divisions. The ABWR performance characteristics are listed in Table 3.10.1. The ABWR major plant specifications and their comparison with that of the present BWRs in Japan are summarized in Table 3.10.2. The key changes from the GESSAR (the GE Standard Safety Analysis Report) to the ABWR design are summarized in Table 3.10.3.

TABLE 3.10.1
ABWR PERFORMANCE CHARACTERISTICS

Electrical Output (MWe)	1356
Construction Schedule (months)	48
Capacity Factor (%)	86
Refueling/Maintenance Outage (days)	55
Daily Load Following Range (% of Rated Power)	50-100
Core Damage Probability (per yr)	10^{-6}
Occupational Exposure (manSv/yr)	<0.5
Solid Radwaste (drums/yr)	100

3.10.1 The ABWR Core and Fuel

The ABWR core and fuel design are aimed at improving the operating efficiency, operability and fuel economy of the plant. This was accomplished primarily by using PCI (Pellet Clad Interaction) - resistant (barrier) fuel, axially zoned enrichment of fuel, control cell core design, and increased core flow capability.

TABLE 3.10.2
ABWR MAJOR PLANT SPECIFICATIONS

ITEM		ABWR	BWR-5
Electrical output		1356 MWe	1100 MWe
Reactor thermal output		3926 MWt	3293 MWt
Reactor pressure		73.1 kg/cm^2	71.7 kg/cm^2
Main steam flow		7480 t/h	6410 t/h
Feedwater temperature		215.5°C	215.5°C
Rated core flow		52.2 x 10^6 kg/h	48.3 x 10^6 kg/h
Fuel rod arrangement		8 x 8	8 x 8
Number of control rods		205	185
Core average power density		50.6 kW/L	50.0 kW/L
Reactor Pressure Vessel	Internal diameter	7.1 m	6.38 m
	Height	21 m	22.2 m
Coolant recirculation (number of pump)		internal pump 10	external recirculation pump (2) internal jet pump 20
Control rod drive	Normal	fine motion elec. motor(18.3 mm step)	hydraulic locking piston drive (152 mm step)
	Scram	hydraulic piston drive, elec. motor as backup	hydraulic piston drive
Emergency core cooling system (ECCS)		Div.I: RCIC + LPFL Div.II: HPCF + LPFL Div.III: HPCF+ LPFL ADS	Div.I: LPCI + LPCS Div.II: LPCI +LPCI Div:III HPCS ADS
Reactor shutdown cooling system		3 trains	2 trains
Containment cooling system			
Primary containment		reinforced concrete containment with liner	self-standing steel containment
Turbine cycle		TC 6F-52" 2-stage reheaters	TC 6F-41"/43" (non-reheat)

RCIC : Reactor core isolation cooling
LPCI : Low pressure coolant injection
LPFL : Low pressure flooder
HPCF : High pressure core flooder
HPCS : High pressure core spray
LPCS : Low pressure core spray
ADS : Automatic depressurization system

TABLE 3.10.3
KEY DIFFERENCES BETWEEN ABWR AND GESSAR DESIGNS

Plant feature	GESSAR*	ABWR
Recirculation system	External pumps Flow control valve	Internal pumps Variable-speed, solid-state power supply
Control rod drives	Hydraulic	Electric/hydraulic fine motion
Emergency core cooling	Three divisions 1 high pressure spray 1 low-pressure spray 3 low pressure flooders 1 steam-driven reactor-core isolation cooling system	Three completely separate divisions 2 high-pressure core flooders 1 steam-driven reactor core isolation cooling system 3 low-pressure flooders
Decay heat removal	2 heat exchangers	3 heat exchangers
Control of reactor flow, feedwater and pressure	Analog	Digital
Transmission of control and safety signals	Wires	Multiplexing fiber optic lines
Containment	Horizontal vents Steel Open pool Air	Horizontal vents Steel-lined concrete Covered pool Inerted
Steam bypass capacity	35%	33%
Fuel transfer	Inclined tube	Cask lift

*The GE Standard Safety Analysis Report (GESSAR) standard plant is a BWR/6-Mark III

The use of minimum shuffle fuel loading schemes reduces refueling times, increases fuel burnup for longer continuous operating cycles. The axially zoned fuel, with higher enrichment and less gadolinia content in the upper half of the fuel rods, allows the axial power distribution to be kept uniform throughout the operating cycle. The axially zoned fuel eliminates axial power shape control rods. The core design uses the control cell core concept, i.e. all the control blades are fully withdrawn throughout an operating cycle except those in the control cells. Each control cell consists of four depleted fuel bundles surrounding a control blade. Only these control cell rods move to compensate for reactivity, which minimizes the operator task and eliminates the need for rod sequence exchanges and power distribution shaping control. The flat hot excess reactivity minimizes rod adjustments during the cycle.

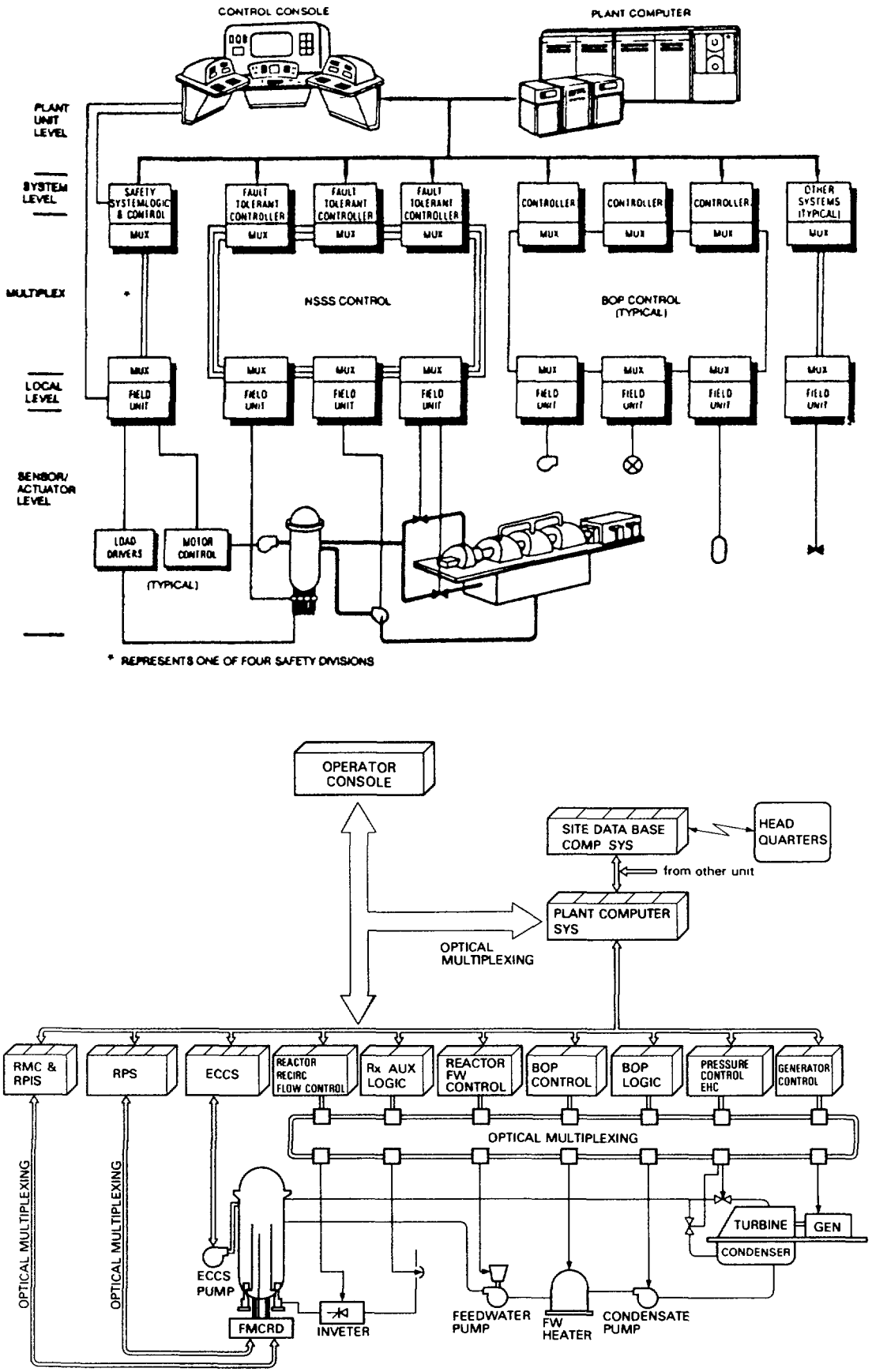

FIG.3.10.1. ABWR control and instrumentation system.

In addition, the excess flow capacity allows for hydraulic spectral shift operation to provide additional burnup with all rods out to increase operational flexibility, and extend operation. It is expected that the fuel burnup will be 38 000 MWd/t. By all these means, the fuel utilization can be improved sufficiently to reduce fuel-cycle costs by about 20% relative to present Japanese practice.

3.10.2 Instrumentation and Control Systems

Using the core flow rate adjustment and no control blade movement, the ABWR daily load following from 100% to 70% to 100% power (in a 14-1-8-1 hour cycle) can be done readily. For both maximum use of the excess flow and slight control blade adjustment, load following of 100%-50%-100% (in a 14-1-8-1 hour cycle) is readily attainable.

The instrumentation and control systems (Fig.3.10.1) include digital technology and multiplexed fiber optic signal transmission technology. Microprocessor-based digital monitoring and control (DMC) have been introduced. ABWR DMC technical advantages include self-testing, automatic calibration and standardization of the man-machine interface, etc. The use of fiber optic multiplexing reduces the amount of cables and cable pulling time during construction.

3.10.3 Nuclear Steam Supply System and Turbine Generator

Reactor Vessel

The reactor vessel has been designed to reduce the amount of welding and to permit maximum ISI (In Service Inspection) of welds, with automatic equipment. All large pipe nozzles to the vessel below the top of the active fuel are eliminated. This improves safety performance during LOCA and decreases ECCS capacity.

Internal Recirculation Pump (Fig.3.10.2)

The most dramatic change in the ABWR from the previous BWR design is the incorporation of reactor internal pumps for reactor coolant recirculation and the elimination of the external loops. The ABWR incorporates ten reactor internal pumps located inside the RPV at the bottom. The internal pump is of wet motor design with no shaft seals. This provides increased reliability and has reduced the need for maintenance. These internal pumps have a lower rotating inertia, and coupled with the solidstate variable frequency power supply, can respond quickly to grid load transient and operator demands.

The elimination of the external recirculation loops has yielded many advantages, the main ones being the reduction in containment radiation levels by more than 50% compared with present plants, lower pumping power requirements, reduced maintenance and ISI requirements, and the excess flow allows for full power operation even with one pump out of service. The Advanced BWR Reactor Assembly is shown in Fig.3.10.3.

Fine Motion Control Rod Drives (FMCRD) (Figs 3.10.4a, 3.10.4b)

The ABWR incorporates an electric-hydraulic Fine Motion Control Rod Drive (FMCRD) which provides electric fine rod motion during normal operation and hydraulic pressure for scram insertion. Operation of the drive mechanism allows 18 mm fine motion steps, which allows for small power changes and easier rod movement for burnup reactivity compensation at rated

Text continued on p. 94.

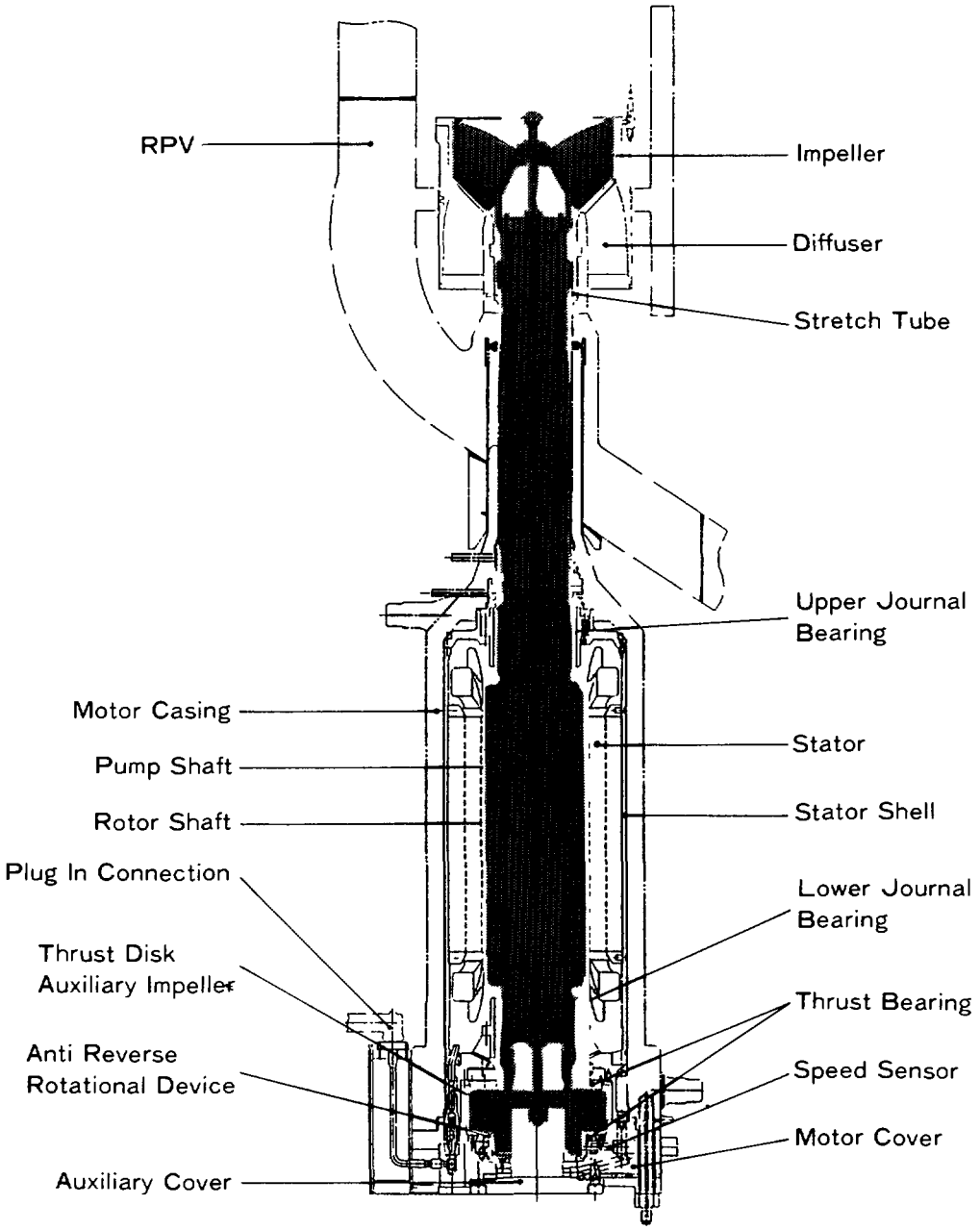

FIG.3.10.2. reactor internal pump (RIP).

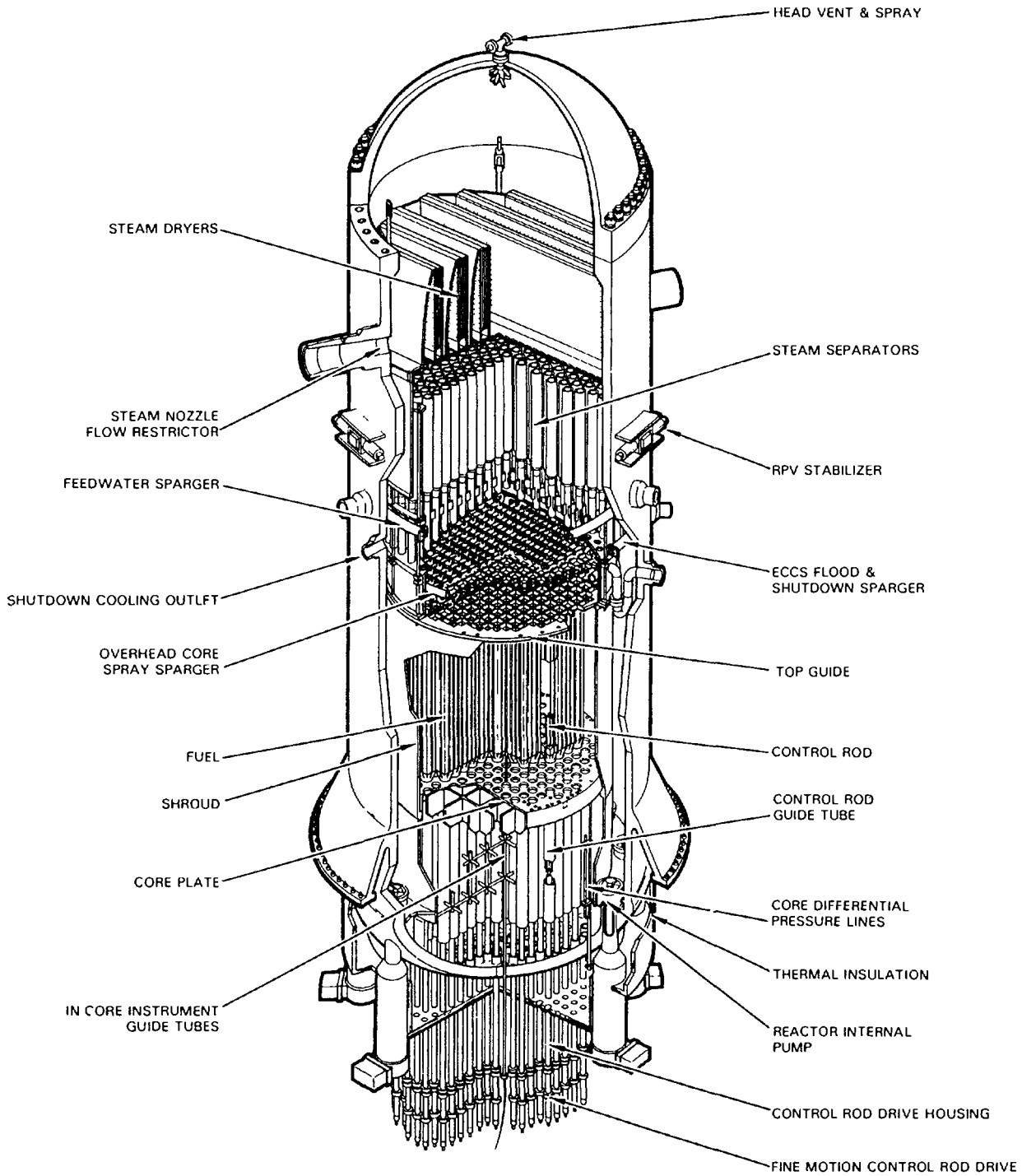

FIG.3.10.3. ABWR reactor assembly.

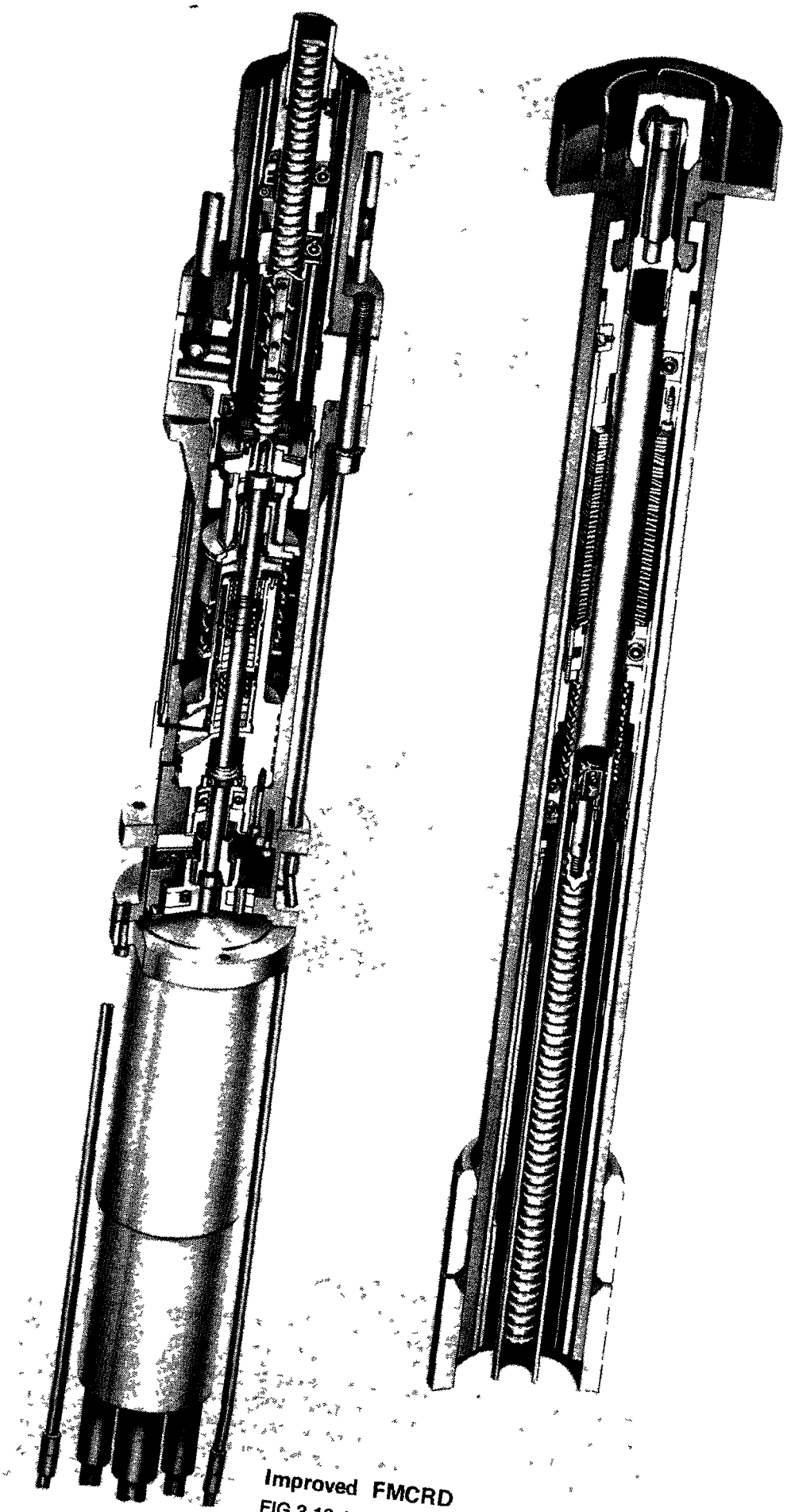

Improved FMCRD

FIG.3.10.4a) Fine motion control rod drive mechanism.

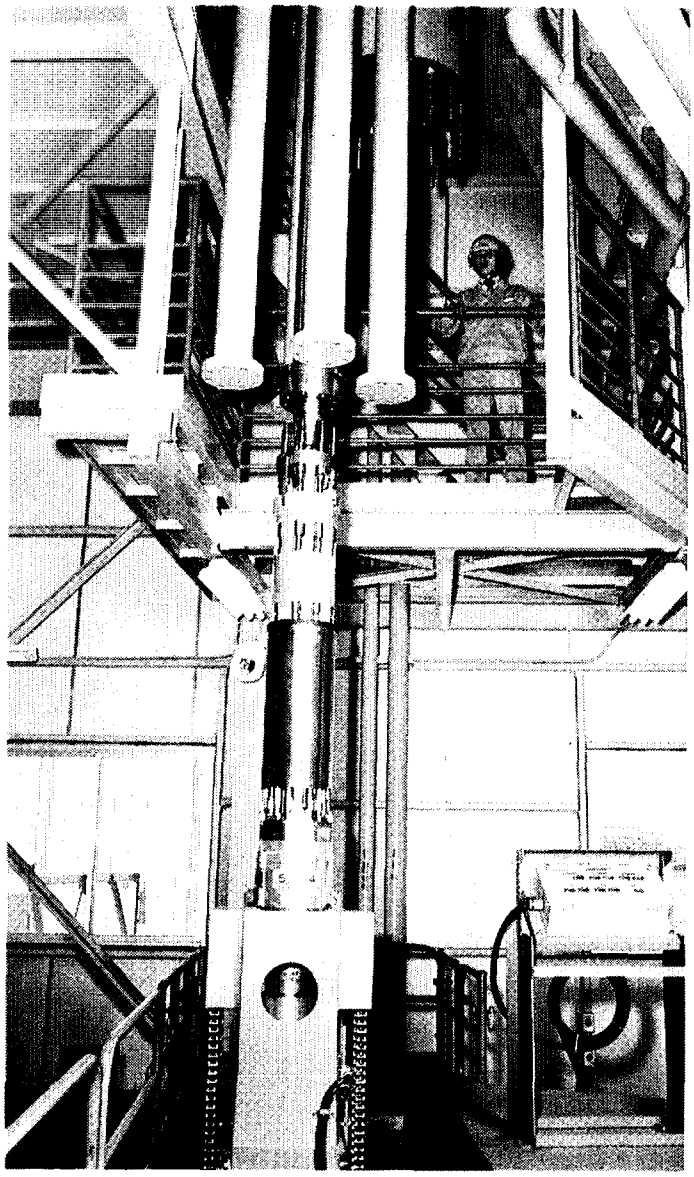

FIG.3.10.4b) Semi-automatic FMCRD handling equipment.

power. The FMCRD scram water is discharged directly into the reactor vessel, thus eliminating the scram discharge volume and associated valves and piping.

Turbine Generator and Related System

In order to improve plant efficiency, performance and economy, the turbine design incorporates a 52 inch (132 cm) last stage bucket. Combined moisture separator/reheaters remove moisture and reheat the steam in two stages. The design has incorporated the concept of both high pressure and low pressure pumped-up drains. Rather than cascading the heater drains back to the condenser, the pumped-up drain system takes advantage of this waste heat and injects it back into the feedwater ahead of the heaters. This concept has increased the generator output nearly 5 MWe, and has reduced the capacity of the condensate polishers.

3.10.4 Engineered Safety System

The ECCS and Residual Heat Removal (RHR) System along with the other auxiliary systems were reviewed to simplify and optimize the design, which incorporates three redundant and independent divisions of ECCS and containment heat removal. The three divisions of the ECCS network each has one high pressure and one low pressure inventory makeup system. The high pressure system consists of two motor-driven High Pressure Core Flooders(HPCF), each with its core flooder and the Reactor Core Isolation Cooling System (RCIC). The RCIC, with its steam turbine driven power, also provides a diverse makeup source during any loss of all AC power. For small LOCAs that do not depressurize the vessel when high pressure makeup is unavailable, an Automatic Depressurization System (ADS) actuates to vent steam through the safety relief valves to the suppression pool.

The ABWR systems have been improved so that core and suppression pool cooling are achieved simultaneously, because in the core cooling mode, the flow from the suppression pool passes through the heat exchanger in each of the three divisions of the RHR. The emergency core cooling system is shown in Fig.3.10.5.

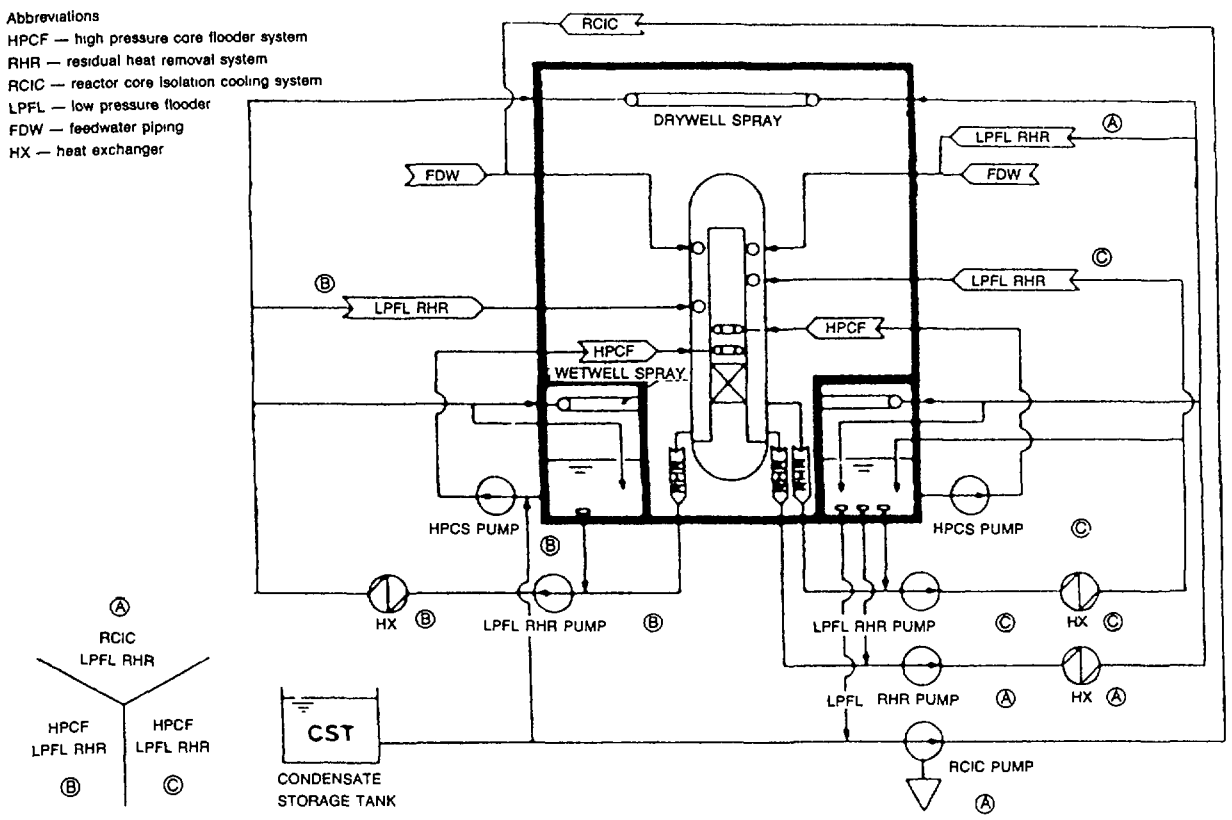

FIG.3.10.5. ABWR emergency core cooling system. The system is in three divisions, A, B and C. As shown in the diagram bottom left, A consists of RCIC plus LPFL/RHR, while B and C consist of HPCF and LPFL/RHR.

3.10.5 Balance of Plant and the Availability

Reducing Reactor Building Volume

The reactor building volume of ABWR designs has been reduced significantly. It means reduced construction cost and time. The schedule from rock inspection to commercial operation is projected as 48 months. The reactor building is shown in Fig.3.10.6. The RCCV (reinforced concrete containment vessel) Engineering Model is shown in Fig.3.10.7.

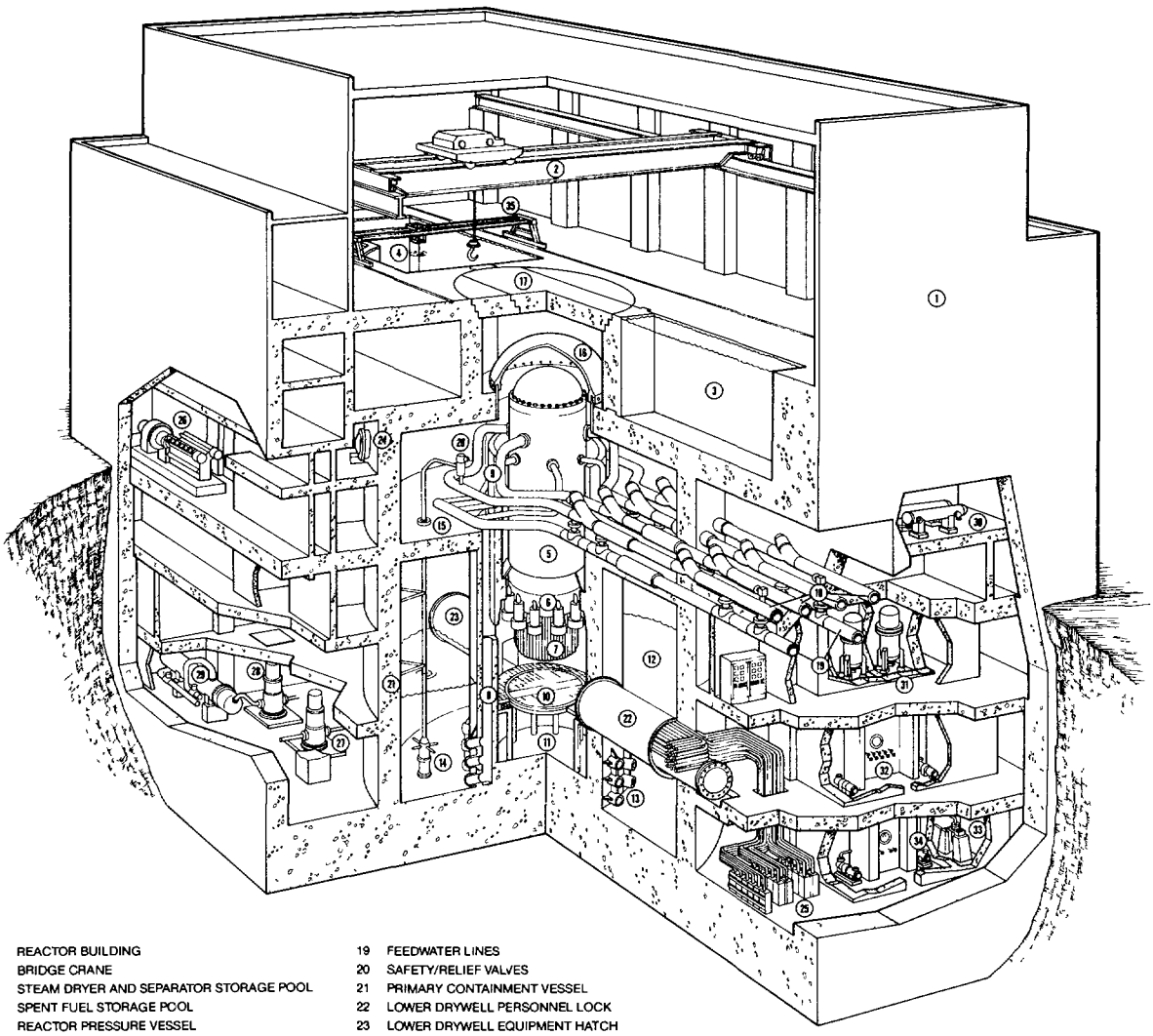

1 REACTOR BUILDING
2 BRIDGE CRANE
3 STEAM DRYER AND SEPARATOR STORAGE POOL
4 SPENT FUEL STORAGE POOL
5 REACTOR PRESSURE VESSEL
6 REACTOR INTERNAL PUMPS
7 FINE MOTION CONTROL ROD DRIVES
8 REACTOR PEDESTAL
9 REACTOR SHIELD WALL
10 LOWER DRYWELL EQUIPMENT PLATFORM
11 LOWER DRYWELL
12 SUPPRESSION POOL
13 HORIZONTAL VENTS
14 SRV QUENCHERS
15 UPPER DRYWELL
16 DRYWELL HEAD
17 SHIELD BLOCKS
18 MAIN STEAM LINES
19 FEEDWATER LINES
20 SAFETY/RELIEF VALVES
21 PRIMARY CONTAINMENT VESSEL
22 LOWER DRYWELL PERSONNEL LOCK
23 LOWER DRYWELL EQUIPMENT HATCH
24 UPPER DRYWELL EQUIPMENT HATCH
25 HYDRAULIC CONTROL UNITS
26 DIESEL GENERATOR
27 HPCS-PUMP
28 RHR-PUMP
29 RHR-HEAT EXCHANGER
30 FPC-HEAT EXCHANGER
31 RWCU-FILTER DEMINERALIZER
32 RWCU-HOLDING PUMP AND OPERATION ROOM
33 RWCU-PUMPS
34 RWCU/SPCU-BACKWASH PUMP AND OPERATION ROOM
35 REFUELING PLATFORM

FIG.3.10.6. ABWR reactor building.

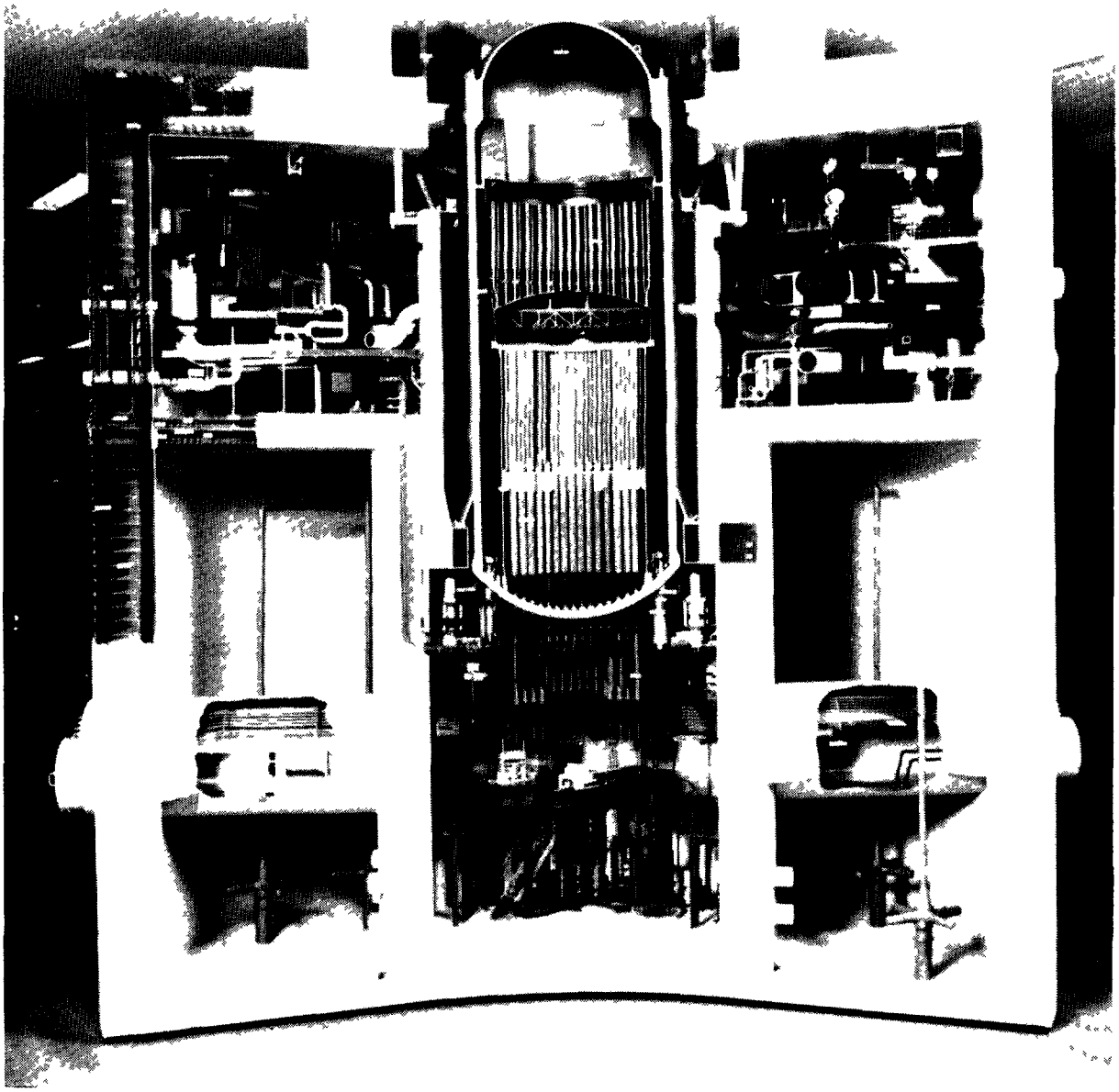

FIG.3.10.7. ABWR RCCV (reinforced concrete containment vessel) engineering model.

Solving the SCC (stress corrosion cracking) Issue

The SCC issue has been crucial. Many design improvements have been proposed not only for new plants, but also for operating plants. For many BWR plants, this problem has been overcome by replacing the materials. Plant manufacturers developed 316 nuclear grade stainless steel pipes, which are highly resistant to stress corrosion, and used a corrosion-resistant cladding (CRC). For elimination of welding induced residual stress, which has an adverse effect on SCC, Induction Heating Stress Improvement (IHSI) was developed using high-frequency heat treatment. A detailed systematic survey programme was developed including the small troubles of the plant. Special efforts are made to develop an inspection technology on test pieces which actually have SCC defects.

3.10.6 Cost Consideration

The capital cost target for ABWR is to limit capital cost of the 1356 MWe plant so as to not exceed that of an 1100 MWe BWR/5-type plant built in Japan. Features which contribute to a reduced capital cost include:

- elimination of the recirculation piping,
- multiplexing of control and instrument cables,
- less crowded containment, allowing a rapid construction schedule.

The fuel cost target for ABWR is a reduction of 20% from current BWR fuel costs. This would be achieved through extended burnup and hydraulic spectral shift control.

It is expected for Japan to be able to achieve plant availabilities of over 80% from the ABWR. Factors which contribute to high availability include:

- 12-15 month refueling cycle,
- elimination of inspection and maintenance of the recirculation piping,
- reduced refueling/maintenance outage,
- less crowded containment, facilitating maintenance,
- capability for achieving full power in two hours from hot standby (versus eight hours in present plants).

3.10.7 Safety Considerations

The overall safety philosophy of the ABWR is similar to that of the GESSAR. The ABWR has greater diversity of safety systems and more complete separation from operational systems compared to GESSAR. Each depressurization system valve is actuated by a dedicated air storage tank. There are sufficient on-site steam and power sources to keep the core covered up to 8 hours after a station blackout accident, giving the operations staff that time to restore feedwater flow.

The summary of the factors contributing to reduced risk is given in Table 3.10.4. They have performed a comparative PSA of ABWR versus BWR/6 for internal events. According to this analysis, the ABWR risk of severe acccident from internal events is about a factor of 10 better than BWR 5.

The ABWR should be improved relative to GESSAR in the area of personnel radiation exposure as well. Factors reducing exposure include:

- less frequent refueling,
- elimination of recirculation piping maintenance and inspection as a source of radiation,
- better layout for maintenance,
- more automated servicing.

Table 3.10.4
FACTORS CONTRIBUTING TO REDUCED ABWR RISK

Improved core cooling:
- More high-pressure coolant pumps
- Motor-driven and turbine-driven pumps
Lower initiating event frequency
- Fault-tolerant digital controllers
- Solid-state control logic
Reduced LOCA probability
- Elimination of recirculation piping and pump
Improved scram system reliability
- Diverse system (electrical + hydraulic drives)
- Scram discharge volume elimination
Improved heat removal capability
- More pumps and heat exchangers
Others
- Improved diesel generator* spatial separation
- Suppression pool feature retained

* Author's note: About 5 MW per redundant set of safety systems is required to drive core-cooling and emergency auxiliaries.

3.11 THE SIZEWELL-B REACTOR [59,65,66] (UK-USA)

The design of the Sizewell-B reactor is based on the SNUPPS (Standardized Nuclear Unit Power Plant System) plants. The reference design selected for the Sizewell-B is SNUPPS Callaway 1 Unit, a conventional Westinghouse 3425 MWt four loop reactor giving 1110 MWe net output. There are a number of modifications and important changes to improve safety and reliability, to accommodate UK practices and Sizewell site-specific requirements, which are posed in particular by the high population density in the vicinity of the site. The major influence, however, was the need to incorporate the reliability requirements of the Guidelines.

The limitation of the plant life is related to the design of the reactor pressure vessel, which in the standard practice is 40 years. As a measure of prudence, a central estimate life of 35 years has been adopted for economic calculation.

A target programme of 72 months from the start of work on main foundations to commissioning is adopted. The CEGB (Central Electricity Generating Board) regards such a programme as feasible both from the point of view of the construction logic and on the basis of experience in Britain.

3.11.1 Safety Criteria

The CEGB in UK has formulated a set of design safety criteria and the guidelines to be used as targets for the design of future nuclear power stations. These criteria have also been applied to the Sizewell-B plant.

The criteria and guidelines require the use of PSA (probablistic safety assessment) techniques in defining the design basis of the plant. One development of major importance was the use of numerical targets for determining the redundancy and reliability required of the engineered safety systems. The fundamental criterion is that the overall frequency of an uncontrolled release of radioactivity must be less than 10^{-6} per reactor year. This requirement was set recognizing inter alia the need to limit any additional risk to a member of the public to a level low compared with everyday risks. The Guidelines use this fundamental criterion as the basis for deriving the reliability targets for the safeguards systems.

The experience had shown that the greatest overall risk did not necessarily emanate from low probability, extreme accidents which apparently had the greatest potential for a release. More frequent accidents could dominate the risk unless suitably redundant and diverse safety systems were provided. It was in fact found necessary to consider the whole spectrum of possible accidents and the various sequences that could follow. In effect, the result is to ask the designers also to avoid having a core melt frequency appreciably greater than 10^{-6} per reactor year.

In particular, the criteria require that two independent and diverse systems be provided to protect against initiating faults with a predicted frequency greater than about 10^{-3} to 10^{-2} events per reactor year. Each of these systems has to be highly reliable (the target is 10^{-3} to 10^{-4} failures per demand) and capable on its own of preventing an unacceptable release of radioactivity resulting from the initiating fault. For accidents, the criteria provide targets such that the overall chance of an uncontrolled release of radioactivity should be around once in a million years with less remote chances for less serious releases.

Probability analysis has been undertaken for particular initiating faults to give confidence that sequences beyond the design basis are of acceptably low probability. The analysis has been performed on the engineered safety systems using fault tree methods to provide a quantified assessment of whether the degree of redundancy and diversity of major plant items in the reactor safeguards systems is sufficient, and if not, to indicate where improvements should be considered.

The frequencies of the following conditions outside the design basis have been assessed:

- conditions arising due to failure of decay heat removal systems, such that coolable geometry of the core may not be maintained; this is pessimistically termed a "degraded core" condition;
- the uncontrolled discharge of reactor coolant system inventory into the containment due to a LOCA, with failure either of the containment systems to maintain the containment within design basis conditions, or of isolation valves to close to prevent leakage to the environment; this is termed a "containment bypass" condition.

On the other hand, it is recognized that the PSA only plays a supporting role in the CEGB's safety case for licensing, and that the primary assurance of safety is sought in well-established engineering criteria and use of deterministic methods. As a result, very stringent requirements have been placed on the demonstration of the integrity of the primary circuit. These requirements are far and above the minimum acceptable level. It has been postulated that the pipework could fail at locations where the loadings are high and the plant is designed to tolerate

such failures. Although many of the pressurized components are likely to leak through a small crack or defect before a severe break occurs, no reliance at present is placed on this practical forewarning of leak-before-break.

The PSA for the Sizewell-B reactor gives a mean core-melt probability of 1.1×10^{-6} per reactor year. The risk is dominated by loss-of-coolant accidents. The probability of a large release of radioactivity is estimated to be 3×10^{-8} per reactor year. The cumulative impact of the measures designed to improve safety beyond that of the standard SNUPPS design has been estimated to increase the power plant capital cost about 20%.

3.11.2 Engineered Safety Systems

The application of the above requirements to the SNUPPS design has led to some changes to the extent of the reliability of the engineered safety systems being incorporated to prevent or limit the consequences of faults, and abnormal conditions. The design features of the engineered safety systems are the following:

1. construction of ring forgings with no major welds in the beltline region of the reactor pressure vessel to minimize the chance of vessel brittle failure due to irradiation and overcooling transients,
2. a microprocessor-based reactor protection system backedup by a secondary protection system based on solid-state switches,
3. four high-pressure safety injection (HPSI) pumps each with heads lower than 2000 psi (138 bar) and with higher flow volumes than Callaway's; the actuation of the HPSI pumps will automatically shutdown the higher head charging pumps, thus preventing overpressurization in overcooling transients;
4. four accumulators, any two of which are sufficient for core cooling at the 600 psi (41.4 bar) pressure range,
5. four low-pressure pumps to recirculate water for core cooling at low pressures and for the containment sprays; these pumps are dedicated to residual heat removal; in addition, the high-pressure HPSI suction is automatically switched to the containment sump instead of manually switching, when the refueling water level in the storage tank is low;
6. an additional steam-driven auxiliary feed pump, in addition to the two electric pumps used in SNUPPS, all the pumps are farther apart than at Callaway and are, therefore, less subject to common-mode failure;
7. four diesel generators (instead of two) to provide emergency power in the case of loss of off-site power,
8. an emergency boration system as a backup reactor trip system to cope with anticipated transients without scram,
9. an extra diesel-driven emergency charging pump to make up for pump seal leakage during station blackout,
10. an additional isolation valve between the high-pressure reactor cooling system and the low-pressure residual heat removal system to minimize the chance of the containment bypass accident sequence (the so-called V sequence),
11. connections to provide water from fire pumps to containment safety features,
12. a full secondary containment vessel over the pre-stressed concrete primary containment; the SNUPPS design has only partial secondary containment;
13. the inclusion of an auxiliary shutdown panel in a location remote from the main control room.

3.11.3 The design features for occupational dose reduction

For Sizewell-B, a target dose of 2.4 manSv/yr has been set which is comparable with that experienced on the British gas-cooled reactors, i.e. an average of 0.002 manSv/MWe/yr. The measures have been taken to reduce the occupational doses during normal operation and maintenance.

The adoption of a narrow cavity around the reactor pressure vessel to reduce radiation streaming. (The SNUPPS design has a wide cavity to allow external in-service inspection of the vessel. The British vessel will be inspected from the inside using standard proven equipment and techniques). The use of a multi-stud tensioner to allow remote and rapid removal of the reactor pressure vessel head for refueling. An increased diameter of the primary containment to allow improved shielding and better access and laydown areas. General improvements in the ventilation and contamination control arrangements. The incorporation of permanent platforms and accessways in the primary containment to allow the use of remote inspection and maintenance equipment. Particular attention is being paid to the use of remote in-service inspection techniques and permanent rails will be installed where appropriate to facilitate ultrasonic examination of primary circuit welds. Steam generator tube inspection and maintanance will also be done from outside the channel head using remote equipment.

3.11.4 Steam Generator

The Sizewell-B plant will use the latest Westinghouse F type steam generator which incorporates specific features to avoid the corrosion related problem of tube denting and crevice and stress corrosion which have occurred on early designs. These features include:

- stainless steel tube support plates with quatrefoil holes to reduce denting,
- full depth hydraulic expanson of tubes to tube sheet to reduce crevice corrosion,
- provision of a baffle above the tube sheet to reduce sludge and consequent tube dry-out and corrosion,
- thermally treated Inconel-600 tube material to reduce stress corrosion cracking.

As well as these features within the steam generator itself, the Sizewell plant will include the following additional provisions which it is confidently believed will reduce even further the risk of steam generator corrosion problems:

- titanium tubed condensers to reduce the risk of sea water (chloride) ingress,
- full condensate polishing to remove impurities,
- zero copper in the feed train (copper has been shown to be contributary to corrosion problems),
- deaerators in the feed train to reduce oxygen content.

3.11.5 Site layout

The layout of the plant buildings on the site is shown in Fig.3.11.1. Important buildings which are separated from the main power block are the cooling water pump house, the radioactive waste processing and storage buildings, the secondary diesel and emergency control building, together with workshops, offices, storage tanks, towns water reservoirs, etc.

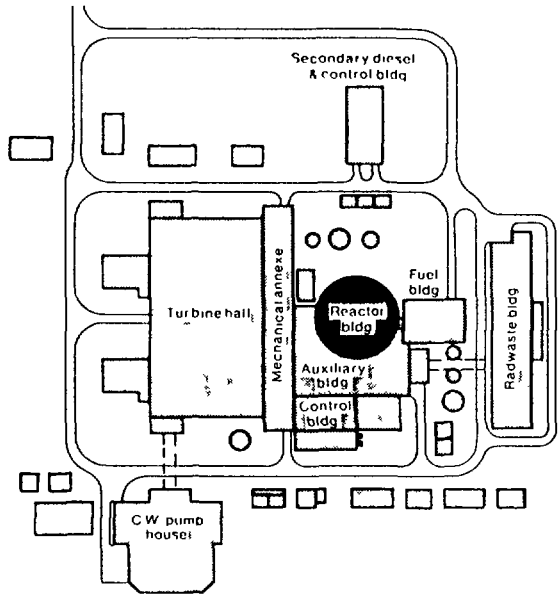

FIG 3 11.1 Site layout of Sizewell B

For reasons of safety, two mutually redundant sets of safety systems are sited well apart. For example, the secondary diesel and emergency control building and its associated essential auxiliary transformers and fuel tanks are situated about 140 m from the main control building and the diesel house on the opposite side of the reactor containment. In the main power block, the reactor building, auxiliary and control building, the fuel building and the turbine house have separate reinforced concrete foundations.

The containment is a prestressed concrete cylindrical structure with a hemispherical prestressed concrete dome roof and steel liner. The containment base is of reinforced concrete containing a keyhole shaped slot to accommodate the reactor pressure vessel and its instrument guide tubes at low level. Except where it abutts the auxiliary building the containment is enclosed by a steel-framed secondary containment building which provides for collection and filtration of leakages from the primary containment. The auxiliary building houses the majority of reactor auxiliary and safety systems.

3.12 STANDARD NULEAR POWER DESIGN (PUN) (ITALY)

The Nuclear Standard Design (ENEL, The Italian National Electricity Authority) makes use of the westinghouse pressurized water reactor nuclear system type PWR mod. 312 (985 MWe rated gross electric power). The design of the whole plant is developed so as to take the Italian context into account, although it is based on an already existing reactor currently in operation all over the world. The main characteristics of the PUN design is listed in Table 3.12.1. In Italy, three conditions must be met:

- more stringent requirements demanded by ENEA (the Italian Safety Authority) concerning safety and radiation protection,
- higher seismicity, often accompanied by a reduced soil bearing capacity, compared to Central European regions,
- additional protection criteria against external events, like missile impact or shock waves from explosions.

Table 3.12.1
MAIN CHARACTERISTICS OF STANDARD PLANT

Type of reactor	PWR-W-312
Reactor thermal power	2775 MWt
Rated gross electric power	985 MWe
Operating pressure of primary circuit	15.51 MPa
Steam pressure from full-power steam generator	6.6 MPa
Pressure vessel	
Total height	13 m
Internal diameter	4 m
Steam generators	
Number and type	3-vertical U tubes
Heat transfer surface	5144 m^2
Tube material	Inconel
Feed water temperature	266.7°C
Primary pumps	
Number and type	3 - vertical, single stage
Design flow	22.164 m^3/h
Pressurizer total volume	40 m^3
Core	
Number of fuel assemblies	157
Fuel rods per assembly	264
Rod o.d.	9.5 mm
Cladding material	Zr. 4
Height of fuel assembly	366 cm
Average equilibrium enrichment	3.2% U235
Total UO2 weight	82.2 t
Number of control rods cluster	48
Average specific linear power	178.5 W/cm
Total coolant flow	51.710 t/h
Inlet reactor temperature	291.7°C
Mean temperature difference in the core	36.9°C
Turbine	
Rated power	1021 MW
Number of casings	1 AP-3 BP double flow
Type of regulation	electrohydraulic
Speed	1500 rpm
Total length	430 m

The general adequacy of the plant design was eventually checked through a probabilistic safety analysis leading to further minor improvements but positively affecting the reduction of risk of damage to nuclear fuel. The ENEL Standard Design is substantially unique for the following reasons:

- double containment system,
- total separation among the various units,
- single foundation mat for nuclear buildings,
- physical separation of redundant emergency systems,
- seismic design with 0.24 g acceleration,
- protection against external human events,

- adoption of additional safety systems,
- forged reactor pressure vessel,
- increased discharge capacity of pressurizer relief valves,
- higher number of emergency electric generators,
- adoption of an advanced protection system,
- intermediate cooling circuit,
- upgraded control systems for water chemistry,
- ALARA (as low as reasonably achievable) design to reduce occupational exposure,
- upgraded ventilation and filtering systems.

As far as design basis accidents are concerned, the existing safeguard systems can avoid serious damage to the reactor core: radioactivity released to the environment is negligible and the dose to exposed individuals is far lower than the established limits. In particular, PUN makes use of the following safeguard systems to prevent core damage:

- one high and one low pressure emergency core cooling system, both of them consisting of two separate and redundant trains,
- an accumulator system to inject borate water,
- a pressurizer relief valve system,
- an emergency feedwater system consisting of two separate, redundant and diversified trains,
- a redundant borated water seal injection system.

In adddition to this, emergency systems can be powered by external systems (380 kV and 150 kV networks) or by internal systems (turbogenerator groups and 8 emergency diesel units for 2 Units). There also exist time allowances to detect malfunctions before the accident degrades to a "severe event".

It should however be recalled that severe core damage does not necessarily imply serious consequences for the outside environment. The containment and heat removal systems, along with adequate recovery actions to be taken within 40 hours, make it possible to manage even accident sequences involving core melt without any dangerous impact on the environment. Anyway, in order to further reduce the residual risk, some additional improvements have been included in the Standard Nuclear Plant Design, in line with the most recent Eropean trends, in order to limit the consequences to the public in the extreme hypothesis that "no active system" can be actuated. In this scenario there are two problems to face: containment overpressure and interaction of the corium with the concrete of the mat.

- For first problem, a filtered vented containment system has been included.
- For the second problem, the reactor cavity is made deeper in order to house a device capable of retaining and cooling down the corium (Fig.3.12.1).

These improvements make PUN a really safe design that could be implemented even in densely populated areas. The probabilistic safety study conducted for PUN before the above described improvements led to a core damage probability of about 5 x 10-6/yr. Later, in the light of the Chernobyl accident, ENEL performed some studies on containment behaviour in the presence of a corium. At the same time, ENEL has taken advantage of all the opportunities offered by a design still under development, and has prepared special procedures to be followed in case of severe accident in

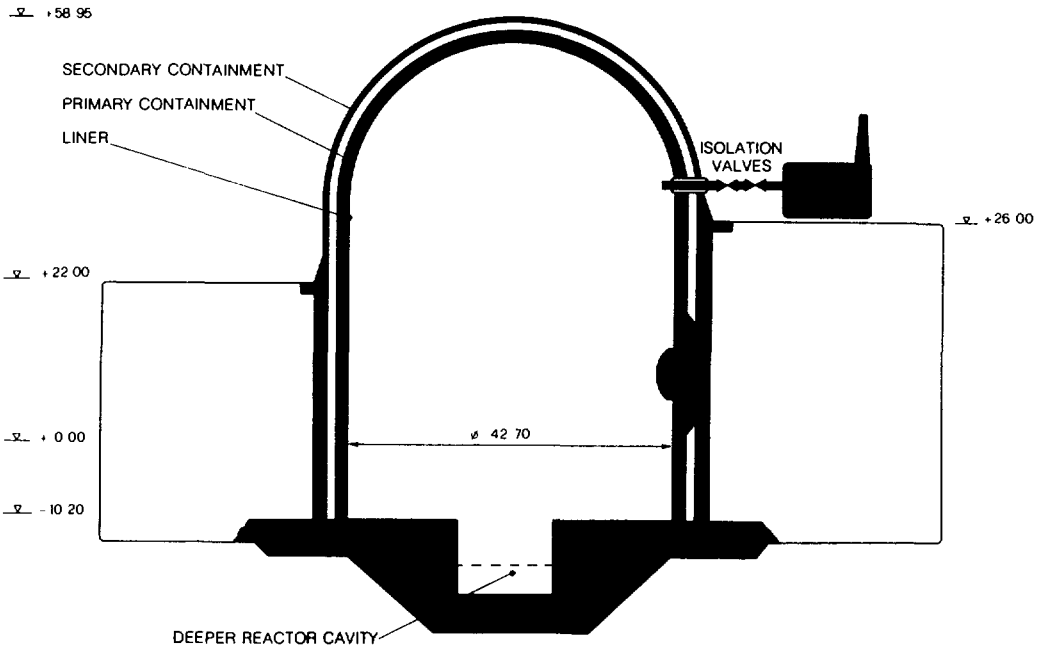

FIG.3.12.1. Conceptual solution for passive mitigation.

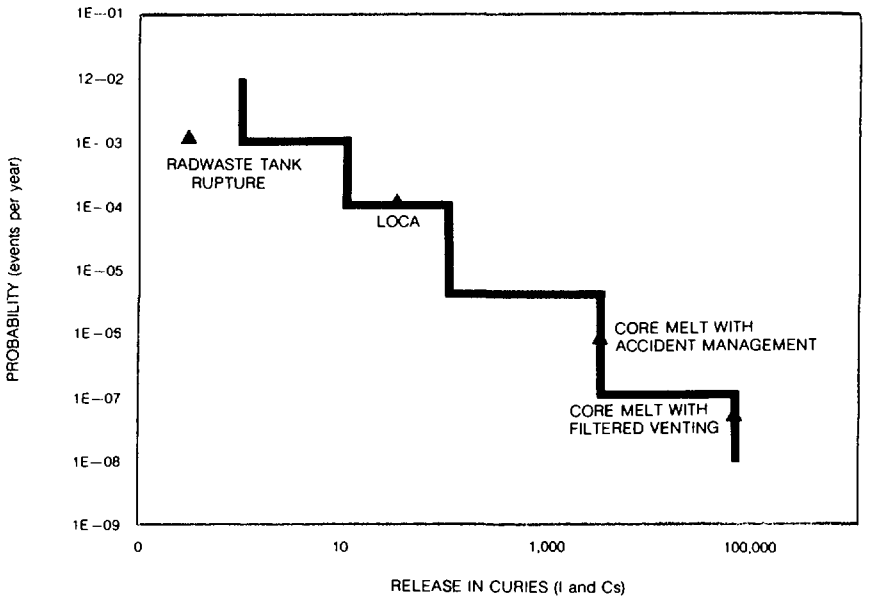

FIG.3.12.2. PUN — maximum allowable releases.

order to further improve the safety level achieved. The resulting severe core damage probability amounts to 1 x 10-6/yr. The results from the analysis performed for PUN are indicated in Fig.3.12.2 in the various hypothetical conditions.

3.13 Experience with Light Water Breeder Reactor development and operation (USA)

The Light Water Breeder Reactor, LWBR, was developed by the United States Department of Energy (DOE) to provide a vast alternative energy resource using existing light water reactor plant technology. A 60 MWe net

LWBR demonstration operated from 1977 to 1982 in the DOE owned reactor plant of the Shippingport Atomic Power Station in Shippingport, Pennsylvania. The Light Water Breeder Reactor uses plentiful thorium as fuel, under irradiation thorium is converted to fissile uranium-233. Operation of the thorium-uranium-233 fueled LWBR at Shippingport demonstrated that more new uranium-233 can be bred than is consumed to produce electricity. Breeding was confirmed by assay of expended fuel from the Shippingport reactor [67].

Breeding in LWBR is significant because it means that with existing light water reactor plant technology it is possible to expand the amount of energy which can be obtained from reasonably assured low and moderate cost nuclear fuel resources by two orders of magnitude, thereby fulfilling the world's energy needs for centuries. To accomplish this expansion of energy resources requires generating power in pre-breeder reactors to produce uranium-233 breeder fuel from thorium by burning naturally occurring uranium-235 or available plutonium from expended conventional commercial cores. It also requires building expended fuel reprocessing plants and remotely operated irradiated fuel fabrication facilities.

Initial LWBR development work indicated that self-sustaining breeding would be possible in a pressurized light water reactor if three conditions are present - 1) use uranium-233 fuel to provide sufficiently more than 2 neutrons per neutron absorbed in fissile fuel (thorium also was needed to be converted to uranium-233; 2) use zirconium clad uranium oxide-thorium oxide fuel rods in a closely spaced, triangular arrangement to minimize parasitic neutron capture; and 3) accomplish reactivity control without neutron poisons, again minimizing parasitic neutron loss. The latter condition was satisfied in LWBR using axially movable fuel assemblies in a seed-blanket core design.

To design, build, and operate the Light Water Breeder Reactor required major technological developments. Only a superficial knowledge of the properties of thorium-uranium-233 fuel existed when the programme began in the early 1960's; accurate and comprehensive design data for all the nuclear, physical, thermal, mechanical, chemical, and metallurgical properties of these materials had to be developed. This comprehensive technology has been documented in a book on the thorium oxide fuel system [68] which references many published LWBR technical memoranda with further details about this technology. The book also discusses thorium oxide fuel fabrication technology, fuel reprocessing technology and fuel performance under irradiation. The LWBR fuel element design was a major development to fulfill the demanding requirements of a practical breeder. A new fuel rod support system using AM-350 high strength stainless steel was developed for the closely spaced, triangularly arranged LWBR fuel rods. Reactivity control without parasitic neutron loss required developing a new control drive mechanism, a balancing system to ensure safe operation of the movable fuel reactivity control, and the associated core design concept.

Although LWBR is intended for large commercial light water reactor power generating stations, it was necessary to demonstrate the reactor in the relatively small Shippingport Atomic Power Station, which was the first commercial scale nuclear generating station in the United States. The Shippingport LWBR core, which is shown in Fig.3.13.1, and described in more detail in Ref.[69], was designed to breed while producing 60 MWe net for at least 18 000 equivalent full power hours. The central three modules were designed for direct use in a large LWBR. The surrounding nine modules for the Shippingport LWBR were designed with outer power flattening blankets to provide the three central modules with a nuclear environment similar to that

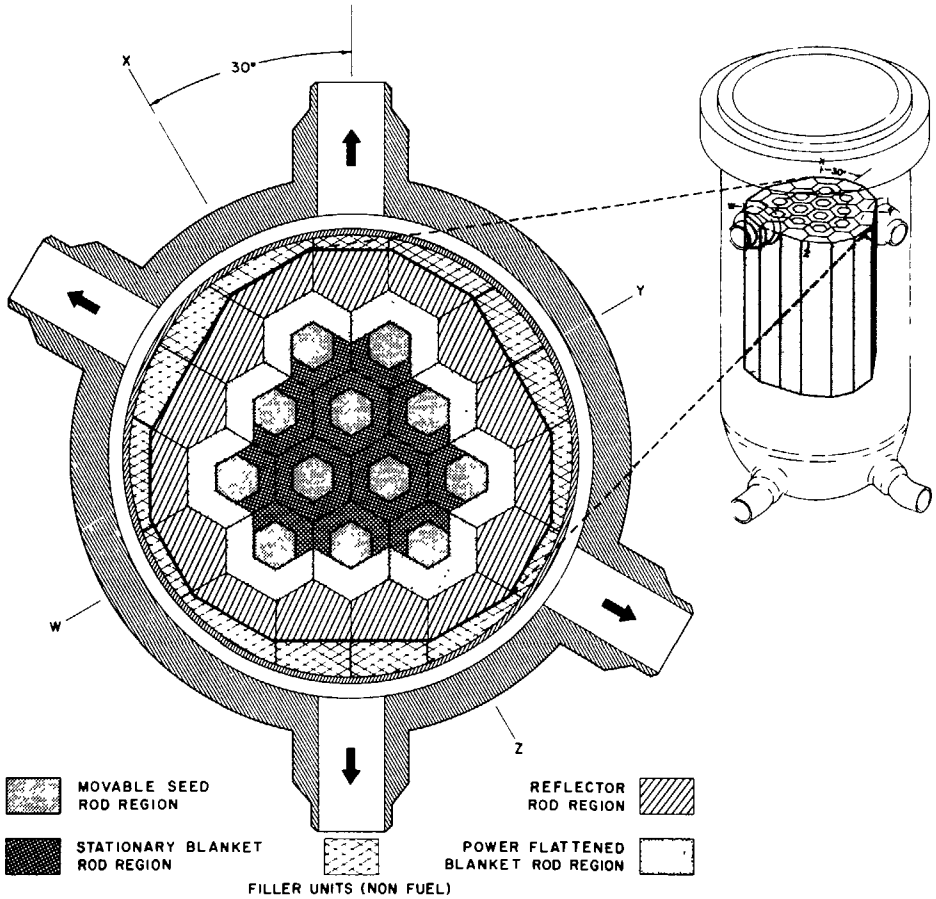

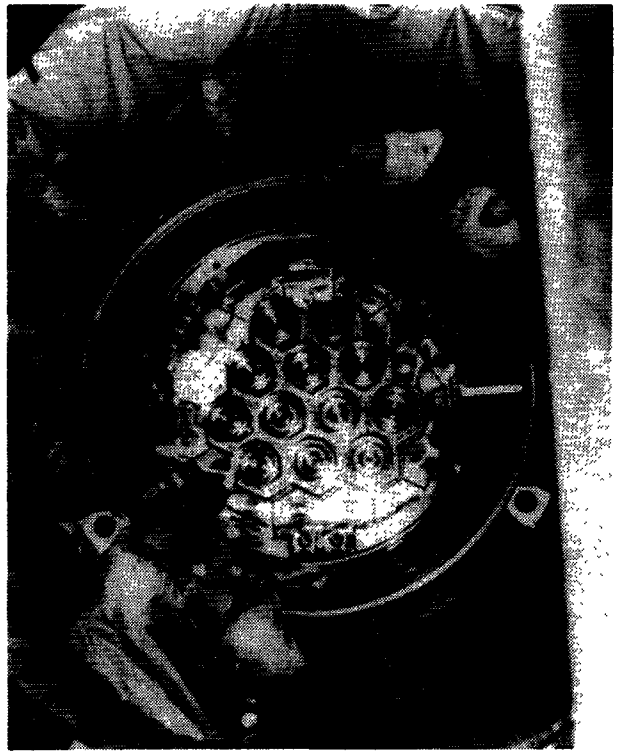

FIG.3.13.1. Shippingport LWBR core cross-section.

of a large LWBR. An outer reflector blanket fueled with only thorium oxide surrounded the twelve modules to reduce neutron leakage at Shippingport to that of a large LWBR, thereby enabling breeding in this small demonstration core. The reactor design permits either base load or load follow power operations, and both of these operating modes were demonstrated during Shippingport operation. Nuclear calculations of the more than 29 000 equivalent full power hours of actual operation in five years at Shippingport predicted that there would be 1.35% more fissile fuel in the expended core than was initially fueled into the core. Assay measurements of the expended Shippingport LWBR fuel showed 1.39% more fuel than the initial fissile fuel load. Engineering examinations of fuel assemblies and structurals demonstrated the conservatism and adequacy of the engineering design of LWBR.

The movable fuel reactivity control concept used in LWBR is illustrated, for one module, in Fig.3.13.2. The arrangement of the thorium oxide and of uranium oxide-thorium oxide high density fuel pellets in LWBR fuel rods enhances the worth of movable fuel and minimizes axial neutron losses by leakage. All required reactivity control functions are accomplished without the use of poison control rods, dissolved boron in the reactor coolant or burnable absorbers, any of which would have precluded breeding. Operation is much like that of a poison rod controlled core. All

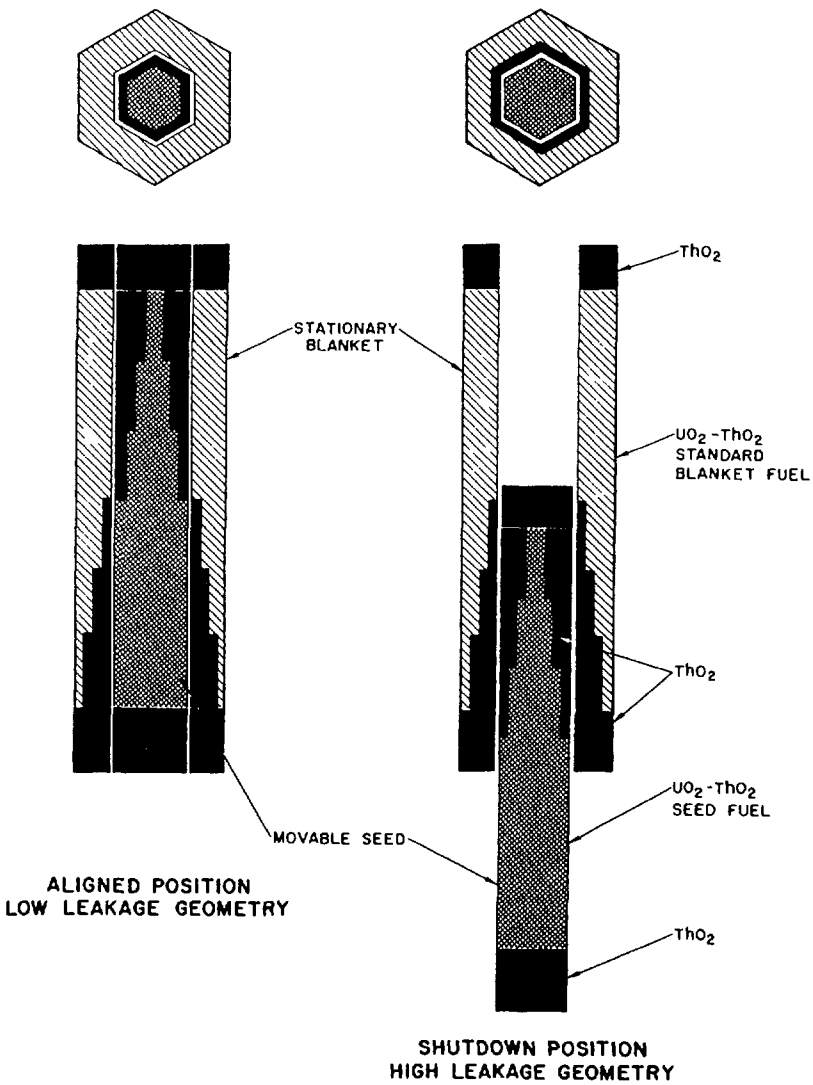

FIG.3.13.2. Control of LWBR by vertical movement of seed modules.

movable fuel modules are positioned in a uniform bank. The critical position of movable fuel gradually increases as the core depletes reaching its highest position at the end of life. Movable fuel is lowered for normal reactor shutdown or for protective scram shutdown.

Although the goal of the LWBR development programme was to develop, design, build, operate, and examine the Shippingport LWBR core, other studies were conducted to evaluate 1) environmental impact of LWBR both at Shippingport and in a large scale application [70], 2) conceptual designs of large scale pre-breeder cores for producing uranium-233 for LWBR's using either fuel assemblies configured like current commercial core [71] or higher performance movable fuel controlled pre-breeders, and 3) conceptual designs of scaled up breeders using the same design as Shippingport central modules [72] (Fig.3.13.3) and advanced water breeder core concepts [73]. Successful completion of the LWBR programme has provided a vast alternative energy resource for existing light water plants which is comparable in energy potential to that of the other breeder types without requiring development and use of new, more difficult reactor plant technologies.

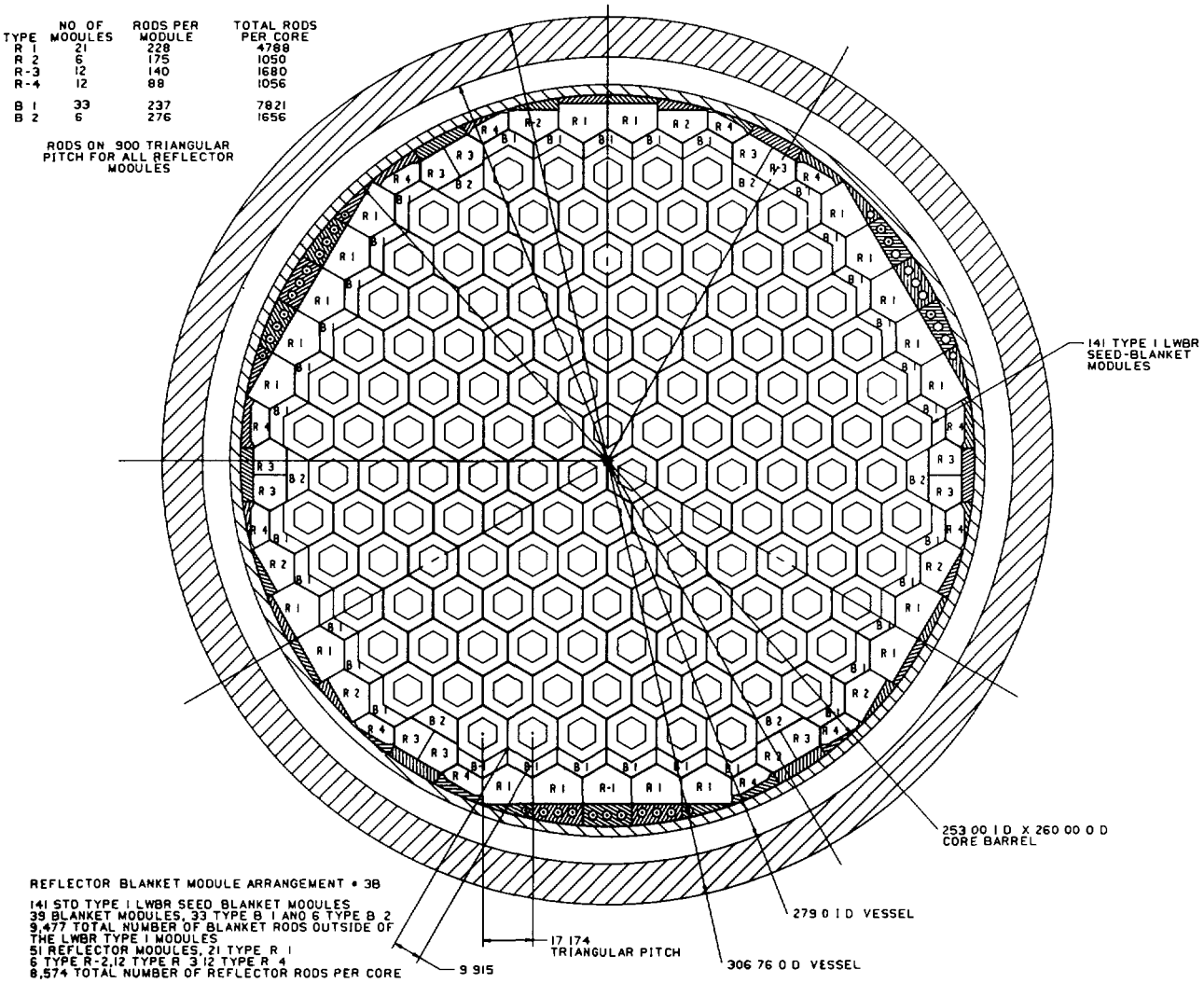

FIG.3.13.3. 900 MW(e) LWBR (all dimensions in inches).

4. MEDIUM SIZE ALWR DESIGNS (~600 MWe)

Besides technology and design improvements for large Water Reactors, there is considerable interest in some Member States in the development of advanced light water reactors in the medium size (MALWR) category (~ 600 MWe). The MALWR plant can be fit better on a relatively small grid or when load growth rate is expected to be low on a large grid. In the early stage of nuclear power introduction, many small and medium sized reactors were developed as intermediate steps to large size reactors, which were expected to be more economic.

The smaller sized plants may have advantages in terms of lower total capital requirements and potentially shorter lead times because the overall scope of the project is smaller. Smaller units are still in operation and there is good experience available from construction, operation and economics. The most recent 600 MWe class PWR plants were constructed in Korea and Yugoslavia.

In principle, there are two different directions for the design approach. In this chapter 4, the so called evolutionary approach is described. Concepts employing this approach are based on currently available technology. Another direction is reactors based on PIUS principles, they will be presented in chapter 5.

4.1 THE DEVELOPMENT OF MALWRs (MEDIUM ALWRs) [74,75]

4.1.1 The Development of MALWRs (Medium ALWRs)

Development of medium sized reactors is part of the advanced LWR programme in some countries. The choice of whether to build large or smaller plants is becoming more complex. Direct comparison of costs for different sizes of nuclear plants is difficult. Some studies show that the unit capital costs ($/kW) of plants ranging from 600 to 1300 MWe are generally independent of reactor size. Medium sized plants might cost as much as 20% more than large plants (in terms of overnight capital expenditures for construction, which ignore the time it takes to build a plant) and still be able to produce electricity at the same busbar price as a large plant due to the following reasons.

Bringing large plants on-line often creates substantial periods of having too much or too little generating capacity. During the period before a major plant is finished, for example, a utility may have to purchase power at high rates to meet rising demand. Then, suddenly, when the plant is finished, the utility may have excess capacity it cannot fully use. If a utility needs capacity growth of about 300 MW per year, for example, then bringing a 1200 MW plant on-line would create overcapacity for four years, while a 600 MW plant would match growth needs after only two years. Small units have a better ability to match reduced or uncertain load growth. For example, if 1200 MW is needed in 8 years, a 600 MW plant can be committed first and a second 600 MW plant can be committed four years later. If at that time, 1200 MW is not yet needed, the second unit could be delayed.

In addition, several MALWRs increase the operational flexibility. In case of one large plant, the whole generating capacity is not available during outages. In case of several smaller plants, the outage of one plant is not so significant. This is particularly important for small grids in some countries.

4.1.2 Design Features

Some important factors are favouring smaller reactors, for example, the potential for a greater degree of shop rather than on site fabrication of systems and components. In smaller reactors, use of passive safety systems is much easier. For removing decay heat, the use of a full-pressure, natural convection circulation system appears to be more practical. In this way, emergency equipment, which relies on power supply, can be reduced. It is probably easier to use large water tanks placed above the core to flood it during LOCA than in a large reactor.

Smaller power reactors could perhaps have some of the particular improved operational characteristics, for example:

- low power requirements for startup and decay heat removal,
- self-regulating control characteristics that are easier for an operator to comprehend and understand,
- minimum system and component stresses - structural, thermal, nuclear, and electrical.

But most of the industrialized countries have nuclear power programmes with large sized reactors, e.g. in France and the USSR. Today, most of the light water reactors in operation are in the range of 900 - 1300 MWe and although their technologies maybe considered mature, further development is taking place, as described in the preceding chapter. The view is generally accepted that generating costs of a larger NPP should be less than those of a smaller one. Plants above a unit size of 600 MWe are claimed to be competitive with coal in many areas. Experience also shows that simply downscaling large plants usually will not result in smaller reactors with favourable economics. The evolution for medium sized light water reactors nevertheless needs some additional R&D and of course needs time and investment for their development.

4.2 FINNISH ALTERNATIVE [76] (FINLAND)

A finnish design project was started January 1985, in order to study an alternative for the fifth nuclear power plant to be built in Finland, although after the Chernobyl accident the plan was changed. The plant to be designed was a modified Loviisa unit, with a VVER-440 PWR. The reactor has 1500 MWt and 6 horizontal steam generators and 6 primary coolant pumps. The plant has one 500 MWe turbine with 3000 rev./min.

4.2.1 Plant layout

The plant buildings and their description are listed in Table 4.2.1 and shown in Fig.4.2.1. The area important for nuclear safety can be divided into the vital area and the important area. In the vital area, an initial event leads automatically to some kind of an accident scenario, while an initial event in the important area will not necessarily affect energy production of the plant. The safety systems are arranged in different buildings next to the reactor building. For example, the emergency core cooling systems are located in the safety building. The residual heat removal system and the emergency feedwater system are in the steam cell, where containment isolation valves of main steam lines and the safety valves of steam generators are located.

The safety classified area will be kept as small as possible. The shape of the buildings will be as simple as possible and the size of the buildings will be kept small. All safety systems are arranged in three

TABLE 4.2.1
BUILDING CLASSIFICATION MATRIX

Building	Important area for nuclear safety I Vital area for safety	I Important area for safety	Activity controll.area	Clean area
Reactor building	X	X	X	
Steam cell	X	X		X
Control building		X		X
Safety building		X	X	
Diesel building		X		X
Auxiliary building			X	
Fresh fuel storage			X	
Nuclear service building			X	
Turbine building				X
Cooling water pump building				X
Water treatment building				X
Workshop-storage				X
Office building				X
Main transformer				X
Auxiliary transformers				X
110 kV transformer				X
110 kV transformer		X		X
Ventilation stack				X
Decontaminated condensate tanks				X
Raw water tanks				X
Fire fighting water tanks				X
Cooling water tunnels		X		X
Surge pool				X
Shelter				X
Plant cable tunnels				X
Plant fence				X
Switchyard				X

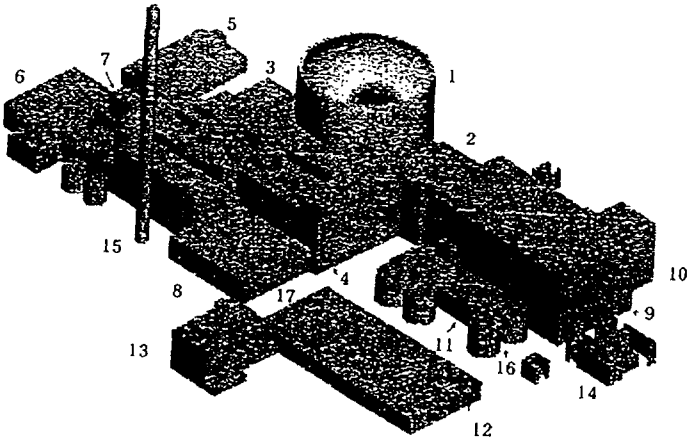

Reactor building (1), steam cell (2), safety building (3), control building (4), diesel building (5), auxiliary building (6), fresh fuel storage (7), nuclear service building (8), turbine building (9), cooling water pump building (10), water treatment building (11), workshop-storage (12) and office building (13). In addition in the plant area there are transformer shieldings (14), ventilation stack (15), water tanks (16) and plant fences. Underground structures are passage corridors, cable galleries and shelter (17).

FIG.4.2.1. Plant layout.

completely separated safety trains, which are separated physically from each other by reinforcing their boundaries. The turbine building contains no systems important to the nuclear safety. The plant is designed to withstand a small earthquake and a crash of a small-size airplane. The plant is analysed against severe reactor accidents.

4.2.2 Primary circuit

The arrangement of the reactor building is shown in Fig.4.2.2. The primary circuit will be made as compact as possible. The primary coolant loops will be made straight without any water seals. This is possible

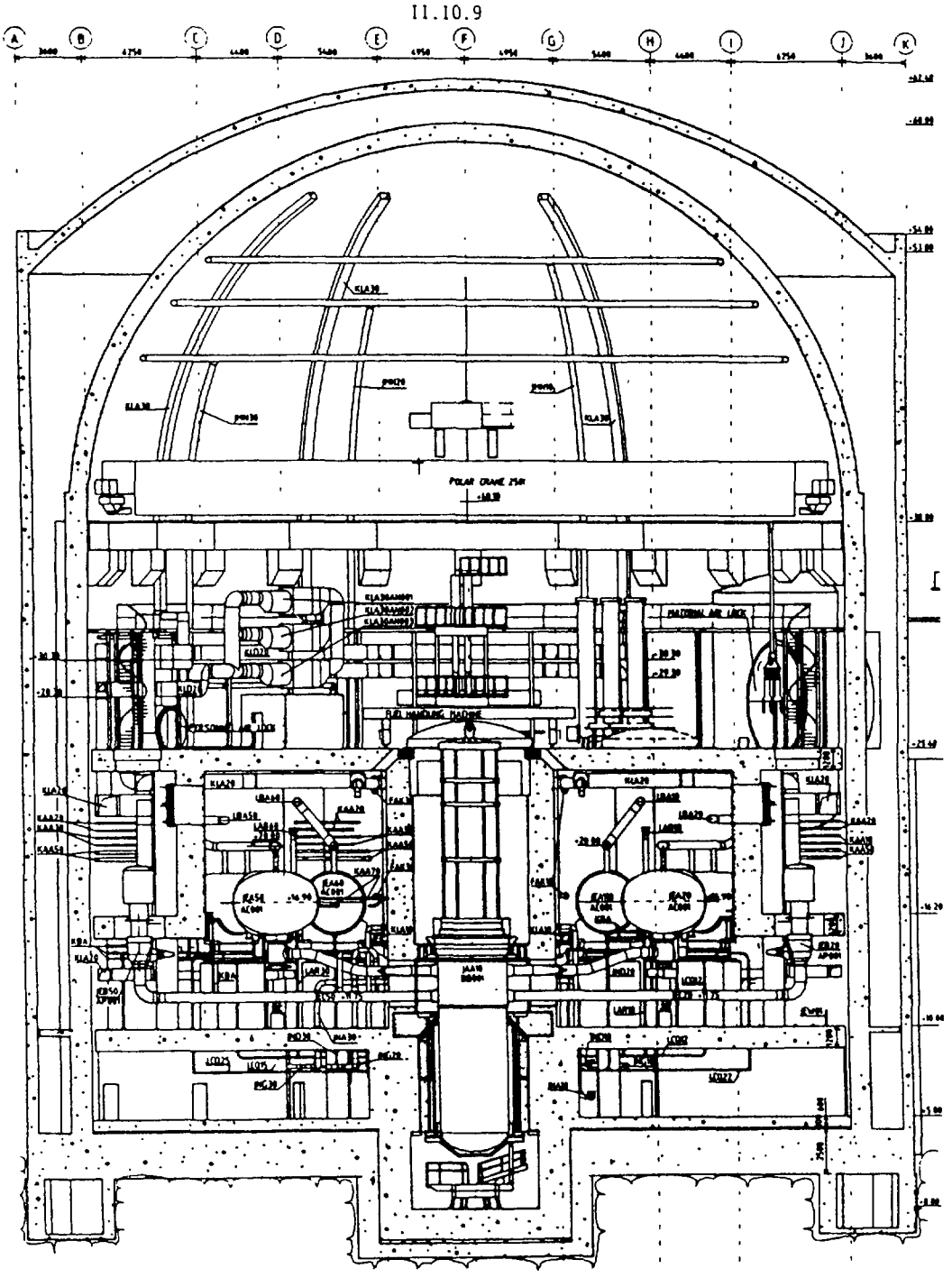

FIG.4.2.2. Section of reactor building.

because of the construction of the primary coolant pump, where pressure side is downwards and suction connection aside. The components of the primary circuit will be installed as low as possible in relation to the ground level. The components will be supported from below.

Leak-before-break principle will be adopted. The pipes are not supported against guillotine breaks. A leak area of 10% is taken into consideration. The structures will not be dimensioned against differential pressures, because the leak will not grow suddenly. The components of the primary circuit will be supported against guillotine breaks in the pipe joint. The loop connection area will be dimensioned against the differential pressure of 7.4 bar. In view of an earthquake, the location of the heavy component of the primary circuit have been chosen as low as possible in relation to the ground level. Supporting of components from two different levels is also possible. The structures will be made symmetric, so torsion loads will be eliminated in case of an earthquake. the dome shape of the containment is advantageous in view of an earthquake.

A reactor core melt accident is not the design basis of the containment. The design pressure of the containment exceeds 40% of the maximum calculated pressure in a loss of coolant accident. Below the reactor pressure vessel there are thick concrete structures above the containment liner but no core catchers will be designed. Spent fuel handling and spent fuel cask drop accidents will be taken into consideration. The transport route will be equipped with shock absorbers in places where the dropping height exeeds 9 metres.

4.2.3 Containment

The primary containment will be dry full-pressure type, equipped with spherical dome, made of prestressed contrete. The inner surface of the containment is lined with 6 mm thick carbon steel plates in order to secure tightness. The allowable leakage of the containment is 0.5 Vol %/24 h. The design leakage is 0.2%. Approval limit in the tests is 0.1% leakage. The maximum containment pressure and temperature in a cold leg break are 3.24 bar abs and 130.5°C. The design pressure of the containment is 4.5 bar abs and the design temperature corresponds to the saturation temperature of 148°C. The horizontal prestressing cables will be a full circular, and the vertical cables will be stressed from below. The cables are going from below over the dome and back to below. The prestressing cables will be grouted. The base slab will be without prestressing. The inside diameter of the inner containment is 42.0 m. The inner height of the containment is 59 m. the wall thickness in the cylinder part is 1.2 m and in the spherical dome 1.0 m.

The secondary containment serves as physical protection for the primary containment. The secondary containment will be made of ordinary reinforced concrete. The wall thickness is 0.6 m. The outer diameter is 49.2 m. The height of the outer containment is 62 m. The width of the intermediate space between the containments is 1.8 m and at the top the free height is 1.8 m.

A slight vacuum will be arranged in the containment and in the intermediate space between the containments so that a possible leakage will be always in the direction of higher activity, i.e. from outside to inside. A separate spent fuel storage will not be built. All spent fuel will be stored in the spent fuel pool of the reactor building. The space for reactor core evacuation and ten reloadings will be reserved. The instrument transmitters will be located in the intermediate space between the containments, but not the containment isolation valves. The decommissioning will be taken into consideration by making the plant easily maintainable, by

keeping the plant clean and by making a box-type neutron shield, which can be removed without breaking the structures.

4.2.4 Consideration for plant construction and operation

Only one floor will be constructed above the heavy components. To the floor above the heavy components, a full size maintanance opening will be arranged, through which the components will be installed and, for example, a steam generator can be changed during the plant life. The components will be brought in through the material air lock, which opens on the main floor of the containment. Temporary installation openings are unnecessary. The material air lock will allow the steam generator and the reactor pressure vessel to be transported through it.

The operating experiences of the Loviisa plant are taken into consideration. As few systems and components as possible requiring maintenance and inspection, will be installed in the primary circuit spaces. The radiation protected spaces, which are accessible during power operation, will be arranged below and beside the primary circuit. Inspection of the primary circuit components will be arranged as well as possible in relation to radiation level and mechanization changes. The heat insulations will be made easily removable to facilitate the inspections. The personnel air locks will be made voluminous and located in suitable places. Good personnel and material connections will be arranged.

Activity spreading will be prevented by separating the ventilation, for example, the reactor pit has its own ventilation system. The surfaces will be painted so that decontamination will be easy and practical.

4.3 B&W B-600 PWR [77] (USA)

The Babcock & Wilcox (B&W) B-600 PWR is a 600 MWe advanced PWR conceptual design. The particular design features of the B-600 are increased design margins, improved passive safety features, and glandless reactor coolant pumps.

4.3.1 Reactor Coolant System

Natural circulation of the reactor coolant is improved in the B-600 by placing the steam generators higher relative to the reactor vessel and increasing the primary piping diameters (Fig.4.3.1). The increased water volume above the core provides more water for core cooling during a loss-of-coolant accident. A significantly larger pressurizer minimizes the plant's sensitivity to upset and transient conditions. To reduce the fluence on the reactor vessel and extend lifetime of the B-600, the larger reactor vessel of the 900 MWe design was retained. The reactor core uses 145 B&W 17 x 17 Mark C fuel assemblies, which include the latest fuel cycle improvements from operating plant experience. The Mark C design has been successfully demonstrated in the Mulheim-Kaerlich reactor.

The B-600 concept uses the advanced B&W Integral Economizer Once-Through-Steam-Generator (IEOTSG) design that was developed for the B-205 and B-145 reactor. This advanced steam generator design has demonstrated superior performance in the Mulheim-Kaerlich plant by transferring 1900 MWt of heat (per steam generator) with over 70°F (21.1°C) superheat. The incorporation of an integral economizer allows a better utilization of the heat transfer surface. Additional improvements were made in the B-600 design to reflect B&W operating plant experience, and to reduce the impact of the small break LOCA design basis events.

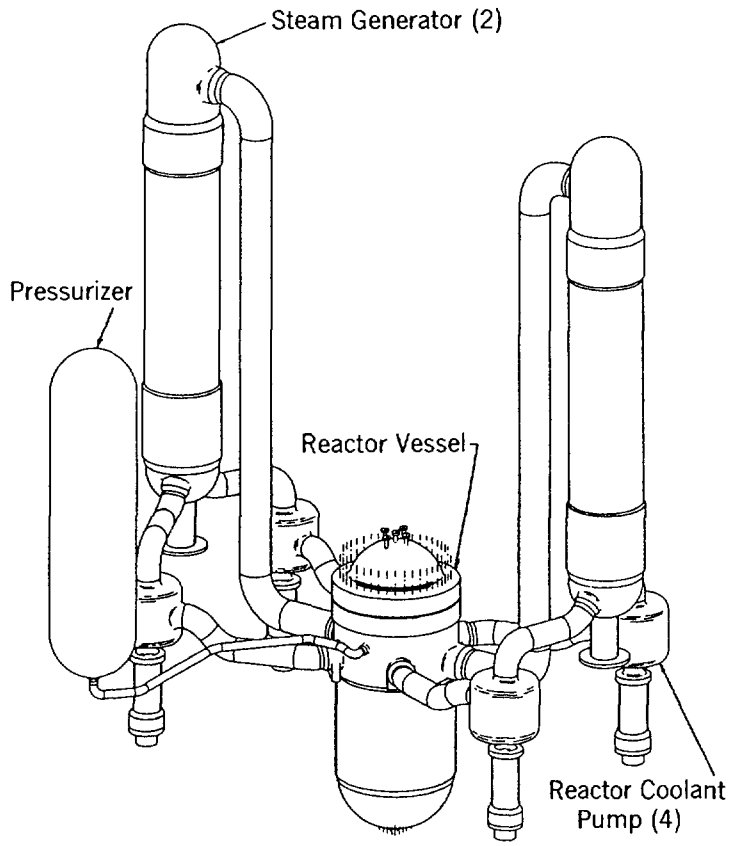

FIG.4.3.1. B-600 nuclear steam system.

To eliminate pump shaft seal problems and simplify the plant, glandless reactor coolant pumps which require no shaft seals or seal injection system are proposed for the B-600 plant. Either canned stator or wet motor pumps can be used, although both require additional inertia that can be achieved by electrically coupled flywheels or by an advanced internal flywheel. B&W has worked principally with Hayward Tyler Limited to utilize a wet motor pump that incorporates a flywheel inside the motor to provide the extended coastdown time required for PWR reactor coolant pumps. The wet motor pumps are arranged with the motor below the pump to ensure that the motor is properly vented and that water is always available for the water-lubricated bearings. An advantage of the water-lubricated bearings is the elimination of the oil system for bearing lubrication and motor cooling currently used in large reactor coolant pumps, which have been a source of maintenance problems and downtime in some plants.

4.3.2 Safety Features

The safety systems approach for the B-600 plant maximizes passive features and locates these features within, or adjacent to, the containment (Fig.4.3.2). This minimizes the need for external seismic structures to house safety systems. Systems that are safety grade in current operating plants, such as the containment spray and auxiliary feed system, are eliminated, while the decay heat removal system, the reactor makeup system, and the nuclear service water system do not need to be safety grade in the B-600 design resulting in less plant complexity and lower costs. Safety features of the B-600 concept include:

- four core flood tanks connected to the reactor coolant system,
- a pumped reactor injection and recirculation system,

- a passive emergency decay heat removal system connected to the secondary side of each steam generator,
- two passive emergency feedwater storage tanks,
- a containment incorporating a gravel bed heat sink and natural circulation air cooling.

The core flood tanks provide coolant to protect the core during and after a LOCA. The pumped injection system provides borated water after the core flood tanks have discharged. This occurs much later in the transient due to the large volume of water stored in the four flood tanks.

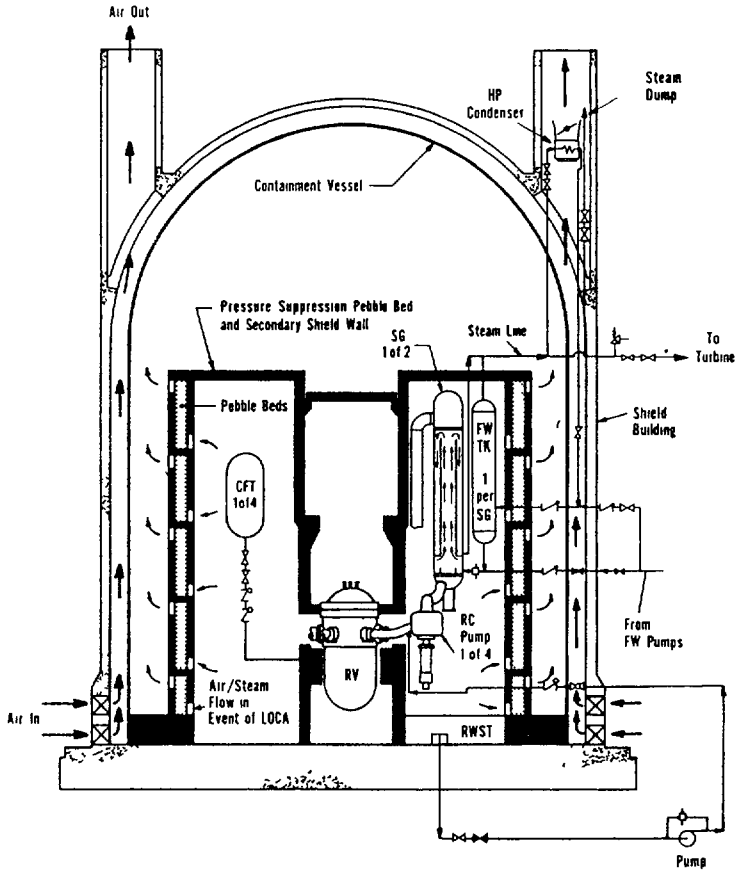

FIG.4 3.2 B-600 safety systems schematic.

Recirculation pumps provide the capability of pumping from the containment back to the reactor coolant system for long term make-up.

For loss-of-feedwater (LOFW) transients such as station blackout, the emergency decay heat removal system along with the emergency feedwater tanks, remove decay heat via the steam generators. The ultimate heat sink is a natural draft air condenser located outside the containment for long-term cooling. Core cooling is provided by natural circulation of reactor coolant. Thus, LOFW events are safely handled without the need for major active components.

Containment for the B-600 concept is a vertical free-standing cylindrical steel structure with a concrete shield separated from the containment vessel to form an annulus for air flow. During a LOCA, air flows by natural circulation in the annulus to remove heat from the containment. The containment houses a gravel bed heat sink which is designed

to effectively condense the LOCA blowdown steam and limit the containment temperature and pressure rise normally resulting from a LOCA. The condensed steam flows to the containment sump where it is available to be pumped back into the reactor. The natural circulation of air over the containment walls provides cooling of the gravel bed as well as post-LOCA decay heat.

Conceptual studies have been completed to evaluate the passive safety system concepts and to develop an improved integrated plant control system. The B-600 concept was incorporated into an overall balance-of-plant designed by United Engineers and Constructors. The result shows the potential for improving plant safety, operability, and maintainability, construction (48 month) and engineering schedules and plant costs. As a result, the B-600 plant can be economically competitive with large nuclear plants and 600 MWe coal plants.

4.4 CE MINIMUM ATTENTION PLANT [78-80] (USA)

Combustion Engineering has developed an alternate design, termed the Minimum Attention Plant (MAP) rated 900 MWt and 300 MWe.

The MAP concept utilizes a self-pressurized, natural circulation indirect cycle with once-through steam generators. A major departure from conventional PWR designs is the incorporation of all primary system components, including the steam generators, within a single pressure vessel. Fig.4.4.1 illustrates the internal configuration of the nuclear steam supply system.

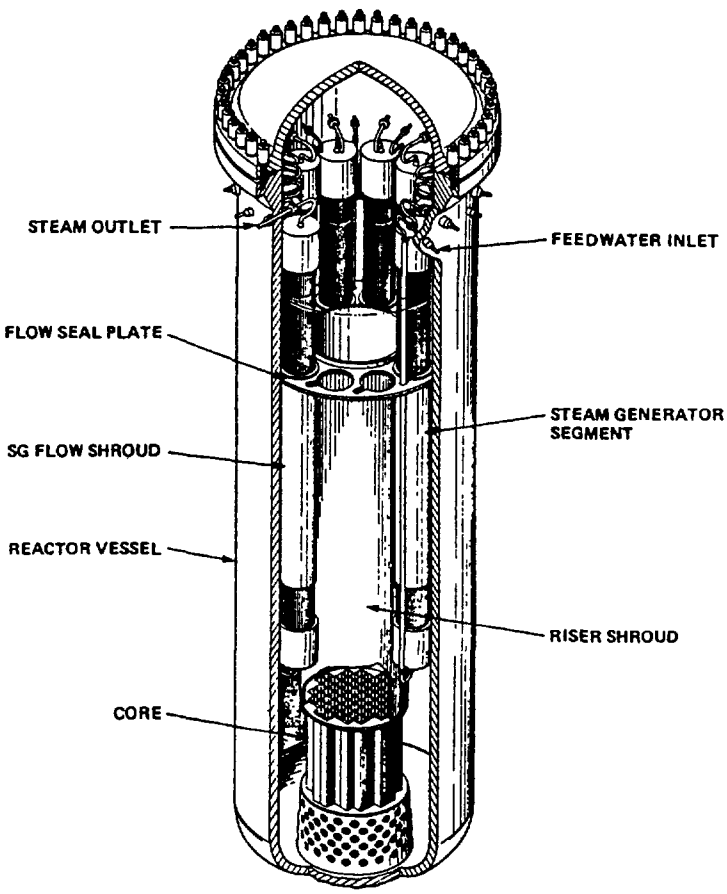

FIG.4.4.1. Minimum Attention Plant — nuclear steam supply system.

4.4.1 Reactor Core and Fuel Assembly

As shown in Fig.4.4.2, the assembly is configured in a 19 x 19 array comprised of four 9 x 9 fuel subarrays. These are separated by a water channel which accommodates a cruciform control element assembly. Each fuel assembly is fabricated with 16 unfilled lattice positions to accommodate fresh burnable absorber rods in its second cycle of irradiation.

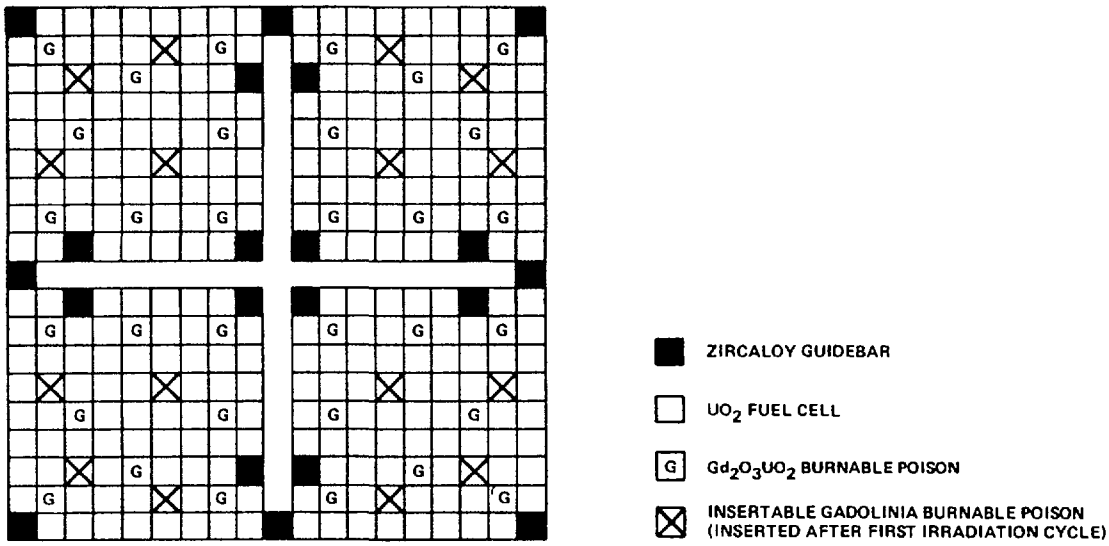

FIG.4.4.2. 19 x 19 fuel assembly layout.

Fresh fuel assemblies contain burnable absorber rods made of Gd_2O_3 in natural UO_2 which remain in the fuel through life. Once-burned reload fuel assemblies are provided with additional burnable absorber rods made of Gd_2O_3 mixed with a low-neutron-absorbing diluent, such as Al_2O_3 or ZrO_2. Once added to the fuel assembly, these burnable absorber rods also remain throughout life. Thus, there are no separate irradiated burnable absorber rods to handle during refueling. The MAP core rated at 900 MWt contains 137 fuel assemblies with an active core height of 136 inch. (3.45 m). The fuel cycling scheme for a two- to three-year cycle length places fresh and once burned fuel in the interior of the core and twice burned fuel on the core periphery. Typically, the fresh fuel would contain 32 Gd_2O_3-UO_2 absorber rods, and the once burned fuel would contain 16 fresh Gd_2O_3-Al_2O_3 absorber rods as well as 32 burned Gd_2O_3-UO_2 rods. Because of its relatively low reactivity, the twice burned fuel would have no fresh absorber rods.

The burnable absorber controls about 8% of the total fuel excess reactivity of 10%. Moderator feedback, discussed below, controls the remaining excess reactivity. This reactivity control permits a nominal cycle length of 10 MWd/kg, with a batch average discharge burnup of 20 to 30 MWd/kg. The fuel enrichment requirement is comparable to a conventional PWR with similar core size.

4.4.2 Reactivity and Pressure Control

A basic feature of the MAP concept is an intrinsic reactor control characteristic which compensates for both the long term effects of fuel depletion and short term power maneuvering requirements, without any

requirement for soluble boron or regulating control rods. This characteristic results from a strong intrinsic negative reactivity feedback of the reactor core to changes in average moderator density. Under all power operating conditions, the water exiting in the core is saturated. The core-average moderator density is therefore governed by the saturated system pressure.

The control mechanism is exemplified by the primary system response to increased heat removal by the secondary system, e.g., an increase in steam demand. For increased heat removal by the secondary system, additional cooling of the primary fluid occurs, which results in both a lowering of the fluid temperature and contraction of the fluid volume. This causes the average core moderator density to increase. Concurrently, the steam volume expands and primary system pressure decreases. The moderator density feedback causes a positive reactivity insertion which raises the core power level to meet the increased steam generation demand. This natural control characteristic similarly responds to a decrease in steam demand, and provides a high degree of inherent power stability as a result of the strong feedback effect.

The key to this unique behaviour is the much greater change of coolant water density with temperature in the temperature range employed in this concept (600-660°F) (315.5-349°C) compared with that normally encountered in present day PWR's and BWR's. This large density change permits large amounts of reactivity to be compensated with relatively small pressure changes. The large density variation also provides unusually high natural circulation driving heads without requiring significant boiling, with its concomitant high pressure drop.

The burnable absorber rods and the self-regulating primary system pressure control provide all required reactivity control throughout the cycle in the power operating range. The full power operating pressure for the MAP typically varies from a high of approximately 2200 psia (152 bar) at beginning-of-cycle to 1800 psia (124 bar) by end-of-cycle, with pressure changes of up to 600 psia (41.4 bar) to accommodate the full range of load following. For all operational transients (e.g., full load rejection), the intrinsic moderator and fuel temperature feedbacks are sufficient to maintain primary system pressure within design limits. The self-regulating feature can be supplemented by a control rod cutback capability, which enables "trimming" control by a small partial insertion of all control rods. Major insertion of control rods for control is required only for cold shutdown, and reactor trip is required only for a few hypothetical accidents.

4.4.3 Reactor Vessel and Nuclear Steam Supply System

A riser shroud located above the core provides a coolant flow path from the core exit to the upper region of the vessel, and also contains the guide structure for shutdown control element assemblies. The upper portion of the vessel provides an entrance for primary coolant to the steam generator in the region immediately above the riser, and contains a steam dome which provides pressure control in the primary system.

The steam generators are comprised of multiple once-through modules located in the annulus between the riser and pressure vessel wall. The generators are designed for removal and/or replacement in the unlikely event that substantial maintenance is required. In contrast to conventional PWR steam generator designs, the secondary coolant flows within the heat transfer tubes. This design has the advantage of placing the tubes under compressive

rather than tensile stress, which increases resistance to stress failure, and also eliminates secondary side features of conventional steam generator designs which can cause crud trapping.

The MAP vessel size enables sufficient height between the thermal centers of the core and steam generators to provide a full natural circulation cooling of the core. The primary coolant exiting the core flows upward within the riser, then flows on a downward path through the steam generators, returning to the core inlet. The major penetrations to the reactor vessel are limited to the relatively small feedwater inlet and steam outlet pipe connections located near the top of the vessel, and control element drive mechanism nozzles located in the vessel head. The MAP design eliminates entirely the external primary system loops and major NSSS components including reactor coolant pumps, pressurizer, steam generator shells, and moisture separators. For a power rating of 900 MWt the required overall MAP vessel dimensions are approximately 81 feet (24.7 m) in height and 18 feet (5.5 m) in outer diameter, with a vessel wall thickness of about 11.5 inch (29.2 cm). These vessel dimensions and gross weight (about 600 t) are well within current commercial manufacturing and shipping capabilities.

4.4.4 Operation

Startup

The MAP utilizes nuclear power instead of pump power to heat the primary coolant from room temperature to operating conditions. The core is initially maintained in a subcritical cold shutdown condition through the insertion of control elements, and without the addition of soluble boron.

Load Follow and Transients

The MAP will perform daily load following automatically. Because of the self-regulating control and inherent stability to xenon oscillations, no operator action is required to control the axial power distribution.

The MAP is designed to accommodate a total loss of load transient through self-regulating control. Additional margin for pressure control is provided by control element cutback when the pressure is above about 2500 psia (172.5 bar).

4.4.5 Safety Features

The MAP design provides significant safety and licensing enhancement features relative to conventional LWRs. These include elimination of the following most potentially serious accidents:

- major loss of coolant accident (LOCA),
- loss of flow accident (LOFA),
- major steam line break (SLB),
- major anticipated transients without scram (ATWS).

4.5 GE SBWR [81-83] (SIMPLIFIED/SAFE BWR)(USA)

The 600 MWe Reactor Island which includes the Reactor Building and the Service Buildings mounted on a common basemat with the Turbine Island (not shown) is shown in isometric view in Fig.4.5.1. The safety features are shown in more detail in Fig.4.5.2. The technical data are given in Table 4.5.1. A summary of the major new SBWR features is provided below.

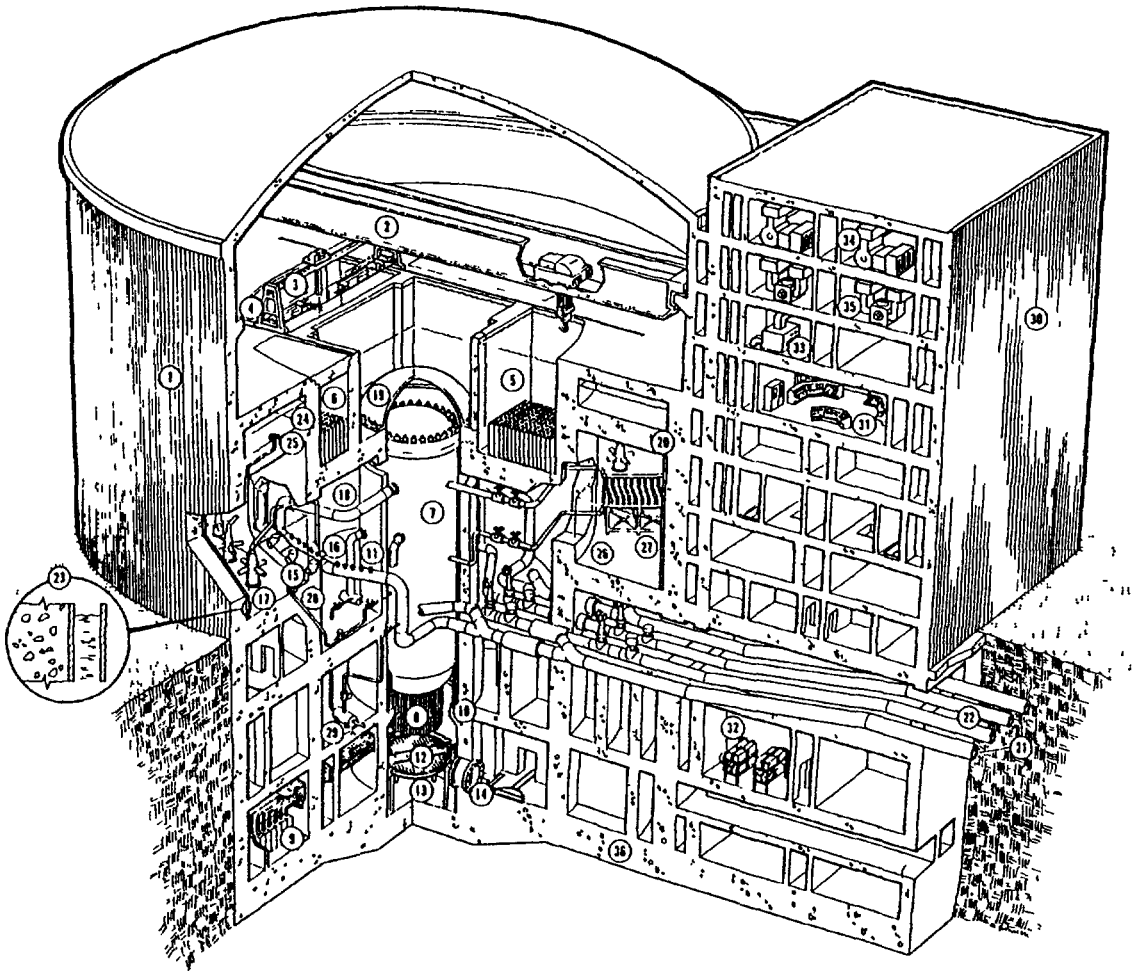

1 REACTOR BUILDING
2 BRIDGE CRANE
3 REFUELING BRIDGE
4 STEAM DRYER AND SEPARATOR STORAGE POOL
5 SPENT FUEL STORAGE POOL
6 NEW FUEL STORAGE
7 REACTOR PRESSURE VESSEL
8 FINE MOTION CONTROL ROD DRIVES
9 FMCRD HYDRAULIC UNITS
10 REACTOR PEDESTAL
11 REACTOR SHIELD WALL
12 EQUIPMENT PLATFORM
13 LOWER DRYWELL
14 EQUIPMENT HATCH
15 HORIZONTAL VENTS
16 DEPRESSURIZATION (DPV) AND SAFETY (SV) VALVES
17 DPV AND SV QUENCHERS
18 UPPER DRYWELL
19 DRYWELL HEAD
20 PRIMARY CONTAINMENT VESSEL
21 MAIN STEAM LINES
22 FEEDWATER LINES
23 PASSIVE CONTAINMENT COOLING (WATERWALL)
24 WATERWALL REFILL POOL
25 WATERWALL REFILL LINE
26 SUPPRESSION POOL
27 ISOLATION CONDENSER
28 GRAVITY DRIVEN CORE COOLING INLET
29 STEAM INJECTOR
30 SERVICE BUILDING
31 CONTROL ROOM
32 EMERGENCY BATTERIES
33 CONTROL AREA EMERGENCY HABITABILITY SYSTEM
34 REACTOR AND TURBINE ISLAND HVAC SUPPLY
35 REACTOR AND TURBINE ISLAND HVAC EXHAUST
36 COMMON BASEMAT

FIG.4.5.1. ASBWR (advanced simplified boiling water reactor) reactor island.

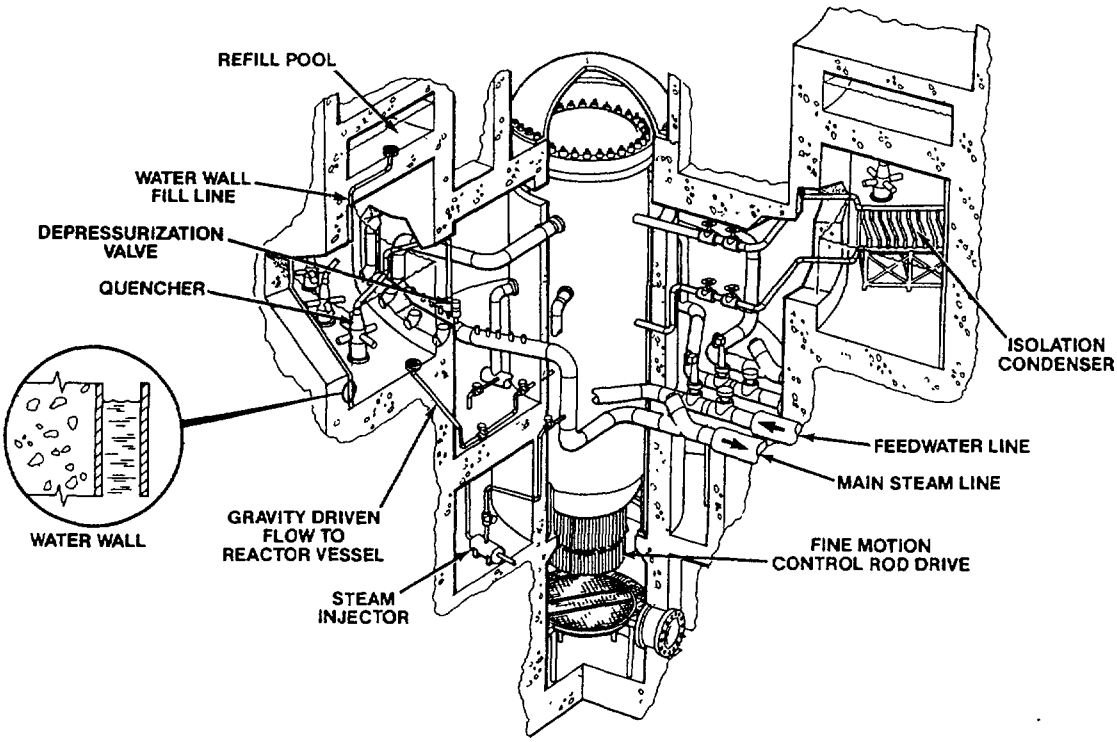

FIG.4.5.2. SBWR safety features.

TABLE 4.5.1
SBWR TECHNICAL DATA SUMMARY

Type	
Simplified/Safe Boiling Water Reactor	
Schedule	
First concrete to commercial turnover	42 months
Power	
Net electrical output	600 MWe
Gross thermal power	1800 MWt
Reactor core	
Active height	~ 2.7 m
Active diameter	5.2 m
Number of fuel elements	748
Average fuel rod power rating	~ 141 W/cm
Average core power density	~ 36.6 kW/L
Fuel assemblies	
Fuel material	UO_2,UO_2-Gd_2O_3
Average reload enrichment at equilibrium	3.2%
Number of rods per assembly	62
Array	8 x 8
Fuel rod diameter	12.3 mm
Cladding material	Zircaloy 2
Cladding thickness	0.86 mm
Control system	
Number of control rods	177
Form of control rods	Cruciform
Neutron absorber	B_4C
Control rod drive motion	Electric-fine motion Hydraulic-scram
Other control system	Burnable absorber (Gd_2O_3)

TABLE 4.5.1 (cont.)

Primary coolant system	
Type	Natural recirculation
Operating pressure	~ 72 kg/cm^{2}a
Steam outlet temperature	286°C
Number of recirculation pumps	None
Recirculation mass flow (100% rated)	~ 24 000 t/h
Reactor pressure vessel	
Internal height	~ 22 m
Internal diameter	5.9 m
Wall thickness, minimum	174 mm
Materials	Low alloy steel/ stainless steel cladding
Containment	
Type	Reinforced concrete containment vessel (steel lined) with passive cooling
Design pressure	~ 3.9 kg/cm^2
Turbine	
Type	TC2F-52in (132 cm)
Number	1
Maximum rating (at 722 mm Hg)	600 MWe
Speed	1800 rev./min
Turbine inlet pressure	9 kg/cm^2
Turbine inlet temperature	284°C

4.5.1 Low Power Density Core and Natural Circulation

The selection of natural circulation (with power density reduced to about 36 kW/L) as the means for providing coolant flow through the reactor provides a number of benefits to help satisfy the SBWR objectives. Compared to the option of forced circulation, the SBWR natural circulation reactor offers 7-15% lower fuel cycle costs, a reduced number of operational transients and increased thermal margin for the transients which are expected to occur. For example, the minimum critical power ratio (MCPR) margin is increased from the current 10% level to about 35%. In addition, elimination of the recirculation loops, pumps and controls needed for forced circulation substantially simplifies the design.

4.5.2 Isolation Condenser

An isolation condenser which was employed in many earlier BWR designs, is connected to the reactor vessel and submerged in suppression pool elevated above the reactor. When the reactor vessel is isolated from the turbine condenser, steam is diverted to the isolation condenser and its heat is released to the pool. In this way, the isolation condenser controls reactor pressure automatically without the need to remove fluid from the reactor vessel. Thus the conventional BWR safety relief valves, which open and close to discharge reactor vessel steam to the suppression pool, are not needed in the SBWR concept.

4.5.3 Gravity Driven Core Cooling System

The Gravity Driven Core Cooling System (GDCS) is a passive safety system which uses gravity to inject water into the reactor from the suppression pool. It provides a simple approach to Emergency Core Cooling eliminating the need for pumps or diesels, and does not need short term (defined as 3 days) operator action. It requires more water in the reactor vessel above the core and additional depressurization capacity, so the reactor can be depressurized to very low pressures and gravity flow from the elevated suppression pool can keep the core covered. The additional water provided also has other benefits, such as reduced pressure rates for transients and substantially more time before the core uncovers in multiple failure scenarios. Since this reactor is a natural-circulation design, there are no large pipes attached to the vessel near or below the core elevation, the design insures full core coverage for all design basis events. Preliminary LOCA analyses have shown the most limiting break to be a break of a small bottom head penetration, equivalent in size to a 2-in (5-cm) pipe.

The GDCS consists of an annular pressure suppression pool similar to that used in current commercial BWRs, but located at an elevation above the reactor core. The suppression pool is passively cooled. A plant design using the GDCS feature has the potential to be more economical to design, construct, and operate due to the reduction in safety system equipment and the resulting reduction in supporting systems. An integral GDCS test is being performed under the sponsorship of the U.S. Department of Energy to demonstrate the feasibility of the gravity-driven concept.

4.5.4 Passive Steam-Driven Feedwater Injector

The SBWR design includes a nonsafety steam injector system (SIS) which provides high pressure makeup water to the reactor for loss-of-feedwater transients and small-break accidents during which feedwater injection is lost. For these events, SIS maintains reactor water level for a few hours, thereby delaying reactor depressurization and activation of the gravity driven cooling system. During this time, station AC power could be restored and the reactor could be depressurized by normal cooldown methods.

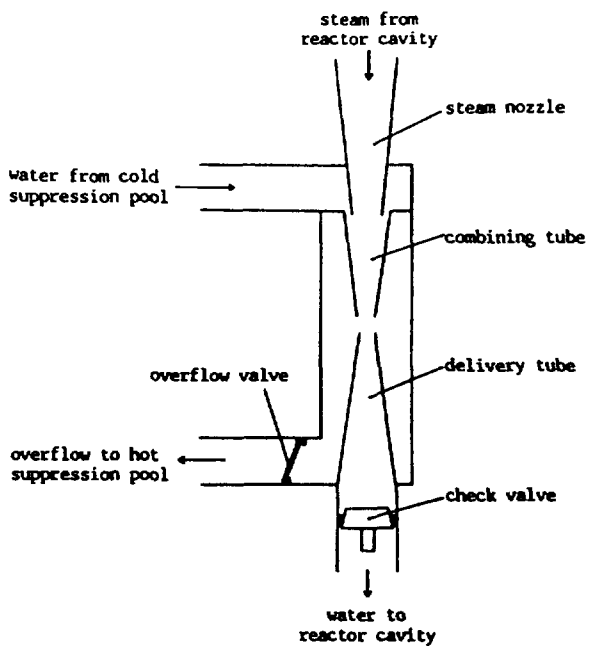

FIG.4.5.3. Schematic view of the steam-driven injector.

4.5.5 Passive Containment Cooling System

The heat that is transferred to the suppression pool during a loss of coolant accident can be removed automatically and passively for three days by the natural circulation water flow of the Passive Containment Cooling System (PCCS). The PCCS design includes a water filled annulus that is built into the side of the suppression pool wall (also the containment wall). The heat of the pool is transferred to this "water wall" which in turn is cooled by natural circulation of the water inside the annulus. The PCCS is capable of cooling the pool in this way for three days without the need for active pumps and standby diesels. Beyond 3 days, water makeup is all that is needed to continue the passive cooling functions. Containment venting is, therefore, not necessary to prevent pressure buildup or to retain containment integrity. This feature, together with drywell flooding for design basis and severe accident events, offers the potential of the site radiological consequences for design basis events or severe accidents being a very small fraction of licensing limits.

4.5.6 Simplified Control and Electrical System

In order to reduce or eliminate the need for electrical power during emergency events, the habitability of the control room is maintained by a system which removes heat passively, by natural convection. This feature, combined with the passive gravity driven core cooling system and the passive containment cooling system allows safety grade emergency diesel generators to be eliminated from the SBWR concept. The building space needed for the control complex is less than half of that required on conventional designs because of the advanced man-machine interface incorporated into the design as well as the use of a plant-wide, intelligent multiplexing system and extensive use of standard microprocessor based control and instrumentation modules. A steam injector in the feedwater system allows for passive high pressure makeup to the reactor system without use of AC power. These features allow the plant emergency power system to be supplied by batteries, with no need for safety grade diesel generators.

4.5.7 Simplified Power Generation System

A tandem double flow turbine with 52-inch (132 cm) last stage buckets reduces building size and simplifies the condenser and piping arrangement. A single string of feedwater heaters is employed to reduce costs and simplify the feedwater and condensate system arrangement. Variable speed motor-driven feed pumps provide reduced cost and simpler controls. The pumps used to pump forward the high pressure drains have been eliminated by regulating the feed pump suction pressure to allow the drains to be pressure driven into the feedwater cycle to reduce capital and operating costs. The separate steam seal system used in earlier applications is eliminated based on evaluations which indicate that the radiation exposure contribution of this system (particularly with modern BWR fuel) is insignificant. The main condenser is located under and to the side of the turbine, allowing the turbine pedestal to be lowered, thus reducing capital costs.

4.5.8 Cost Consideration

Reduced capital outlays can be expected compared to those needed for higher rated units. It is not likely to have reduced unit costs (dollars per kilowatt) but the initial capital investment by the utility is reduced.

4.5.9 Safety Enhancement

Operator actions

The passive safety approach adopted for SBWR places much less reliance on operator actions in emergencies, with no operator action needed for at least three days (and even then, very simple action). Therefore, the burden on the operator is substantially decreased.

Safety Margins

Safety margins are improved. The use of natural circulation, lower core power density and the gravity driven core cooling system increases transient and accident safety margins.

Public Acceptance

As the basic passive safety features and reduced reliance on operator actions becomes understood and accepted by regulatory authorities and other critical reviewers, it is likely that public acceptance will be improved.

4.6 WESTINGHOUSE AP-600 APWR [84,85] (USA)

The Westinghouse AP-600 plant is an Advanced Passive (AP) 600 MWe plant which incorporates passive safety features. The major design features are described below.

4.6.1 Reactor Core

The selected parameters for AP600 and the comparison with those of the conventional two loop plant are listed in Table 4.6.1. The reactor core consists of 145 fuel assemblies of 17 x 17 OFA (Optimized fuel assembly) with an active fuel length of 12 ft (3.65 m). The core power density is

TABLE 4.6.1
COMPARISON OF SELECTED PARAMETERS

Parameter	AP600	Plant Conventional 2 Loop
Reactor Power, MWt	1812	1876
NSSS Power, MWt	1818	1882
Gross Output, MWe	630	652
Number of steam generators	2	2
Number of cold legs	4	2
Number of hot legs	2	2
Number of fuel assemblies	145	121
Type of fuel assembly	17 x 17	16 x 16
Number of fuel rods	38 280	28 435
Nominal flow rate, gpm/loop	98 000	102 000
Maximum coolant temperature, ^{o}C	324.4	324.4
Linear heat rating, kW/m	12.6	17.6
Core power density, kW/L	73.9	107.9
Core loading, MtU	61.02	49.44
Reactor vessel i.d., m	3.99	3.35
Radial neutron reflector	Yes	no
Reactor vessel fluence, 10^{19} n/cm^2	< 2(60 yr)	4-5 (40 yr)

reduced approximately 30% to 73.9 kW/L, which in conjunction with a stainless steel and water radial neutron reflector reduces the amount of U_3O_8 requirements and separative work units (SWU) by around 25% when compared with the conventional one on an equal energy and constant burnup basis. Soluble boron and burnable absorbers are used for shutdown and fuel burnup reactivity control. Low worth grey rods (12 rod control clusters) are included for load follow and power regulation. The reference fuel cycle is for an 18 month period with a 3 region core. AP600 adopts forced convection due to the unattractive economics of enhanced natural convection designs, in which an attempt was made to have natural convection augment pump flow by having natural convection contribute significantly (50-60%) to the total primary flow during noraml full-power operation. For example, a reactor core which was sized to produce 600 MWe using forced convection cooling could only produce 100-150 MWe using natural convection and 200-300 MWe using enhanced natural convection.

The larger core and vessel provides increased primary water inventory and significant reduction in the reactor vessel neutron fluence. The vessel fluence on the AP600 is less than 2×10^{19} n/cm^2 (E >1 Mev) over the 60 year design life of the vessel, whereas, the 40 year fluence on the conventional two loop plant is about 5×10^{19} n/cm^2 (E >1 Mev). This reduction results from the combined effect of the low power density core, the radial neutron reflector and a somewhat larger spacing between the core and the vessel.

4.6.2 Nuclear Steam Supply System

The reactor vessel, internals and the steam generator are quite conventional, except for the fact that there are four cold leg nozzles and only two hot leg nozzles (Fig.4.6.1). This results because of features of

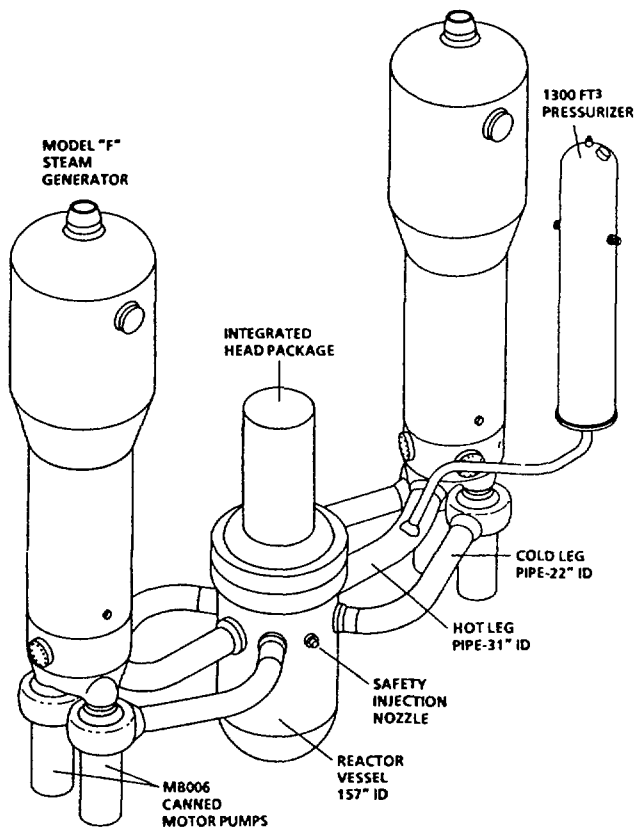

FIG.4.6.1. AP-600 reactor coolant system.

the loop layout which are somewhat different than a conventional PWR. The reactor coolant system, which has been simplified significantly (Fig.4.6.2) employs two coolant loops each consisting of one Model "F" steam generator, two 49 000 gpm canned motor pumps, a single hot leg pipe, and two cold leg pipes. The main coolant pipe legs employ very long radius bends which eliminate many welds. The pump casting suction nozzle is welded directly to an opening in the bottom of the steam generator channel head (Fig.4.6.3). The heavy wall, large diameter attachment weld effectively combines the two components into a single structure and eliminates the need for a separate set of pump supports. The combined weight of the steam generator and two attached pumps is only 14% greater than the steam generator alone.

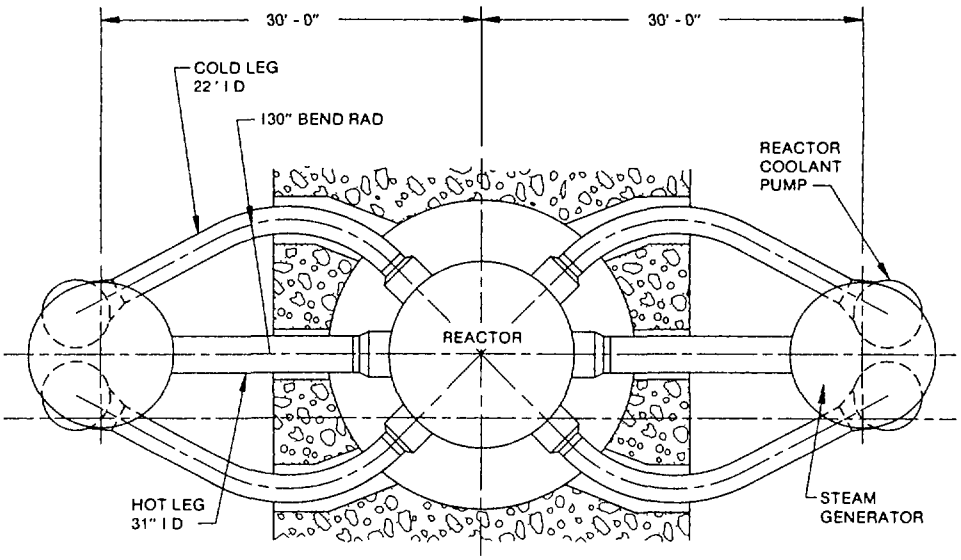

FIG.4.6.2. AP-600 primary loop piping plan view.

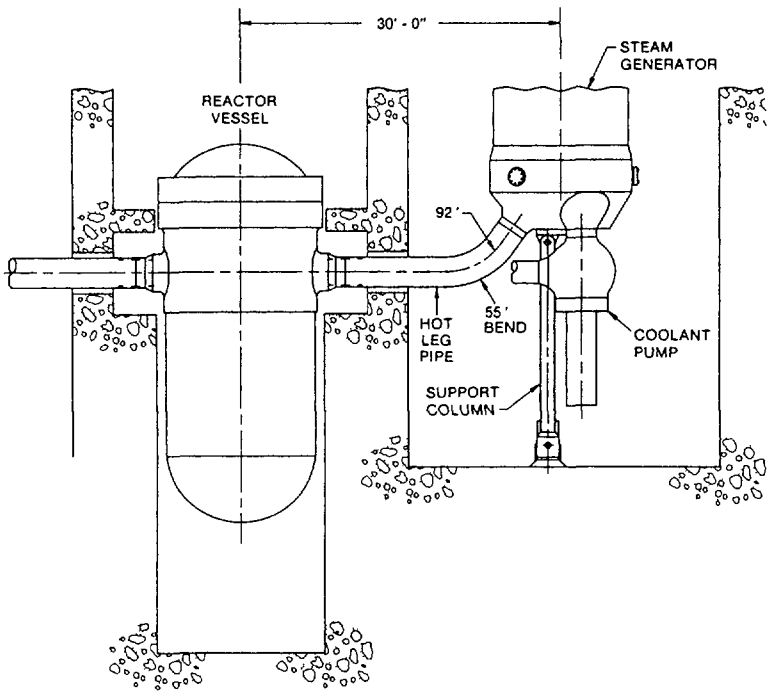

FIG.4.6.3. AP-600 piping arrangement.

The advantages of this configuration are significant. The auxiliary fluid systems needed to support a canned motor pump are much less complex than those needed for a shaft seal type pump. The canned motor pump has a demonstrated track record of high reliability, is more tolerant of off-design conditions than shaft seal pumps, and inherently reduces the potential for small LOCA. The close coupling of the pump suction to the bottom of the steam generator channel head eliminates the cross-over leg of coolant piping which improves the small break LOCA transient. It also reduces loop pressure drop, simplifies the foundation and support system for steam generator, pumps and piping, and reduces considerably the cost and complexity of primary loop piping. The use of two symetrical cold leg pipes in each loop provides lateral stiffness at the bottom of the steam generator eliminating the need for lower lateral supports for plants at moderate and low seismic ($\leq$ 0.3 g SSE) sites. The adoption of the Leak-before-Break philosophy effectively eliminates pipe whip restraints and shields. The simplicity of the supports in turn permits excellent access to the steam generators and pumps for inspection and maintenance functions.

4.6.3 Passive Safety Systems and Auxiliary Systems

The plant engineered safety system has been redesigned and simplified, using passive safety concepts for performing each of the necessary safety functions. As a result, the active systems such as component cooling water, AC power and HVAC (high voltage AC) are now non-nuclear safety grade. The design concept resulting from this approach shows considerable reduction in the size of the seismic auxiliary building.

4.6.3.1 Residual Heat Removal (RHR)

A passive RHR heat exchanger is provided to remove core decay heat in case the normal and startup feedwater systems are not available. The passive RHR heat exchanger is located in a natural circulation loop on the Reactor Coolant System (RCS)(Fig.4.6.4). The heat exchanger is located in the containment inside the in-containment Refueling Water Storage Tank (RWST) which serves as the heat sink. The bottom of the heat exchanger is located about 8 feet (2.4 m) above the loops. The passive RHR heat

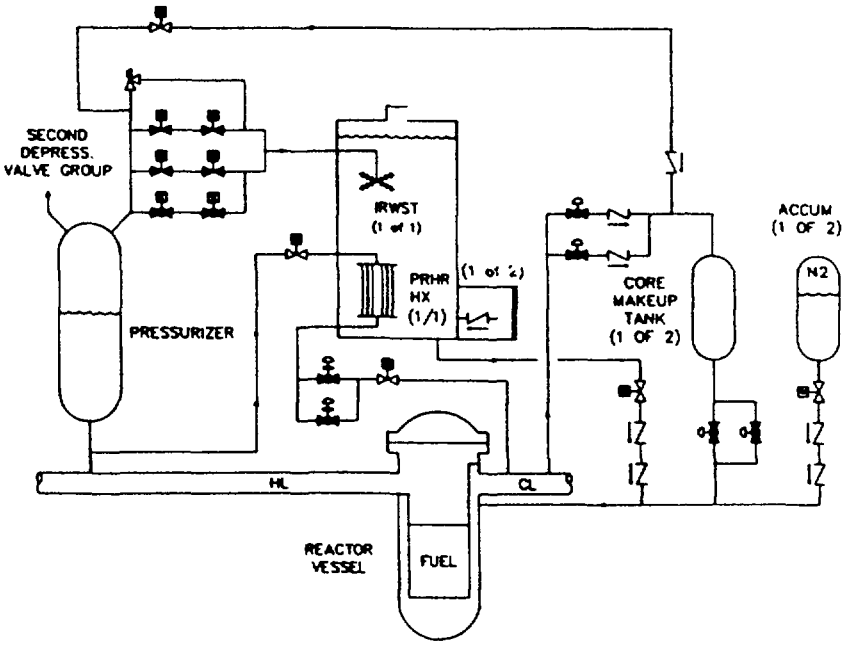

FIG.4.6.4. AP-600 passive safety injection system.

exchanger is actuated by opening either of the air operated valves, which fail and open on loss of power or signal. In case the reactor coolant pumps are not available, the flow will be natural circulation from the hot leg to the top of the passive RHR heat exchanger to the cold leg. The in-containment RWST will absorb decay heat for several hours before the water becomes saturated. However, it will take several days to boil off sufficient water from the in-containment RWST before the heat removal capability degrades. This provides ample time to recover main or startup feedwater or to align the normal RHR cooling equipment which is part of the AP600 spent fuel cooling system.

The passive RHR heat exchanger which replaces the safety grade auxiliary feedwater system does not rely on pumps, AC power, or air/ water cooling system. The functioning of the passive RHR heat exchanger is also not affected by failure of the steam generator pressure boundry, such as steam or feed line breaks or steam generator tube ruptures.

4.6.3.2 Passive Safety Injection

Passive reactor coolant makeup is provided to accommodate small leaks when the normal makeup system is unavailable and to accommodate larger leaks resulting from Loss of Coolant Accidents (LOCA). Safety grade reactor coolant makeup and safety injection are provided by a set of water tanks: two core makeup tanks, two accumulators and a in-containment RWST (Fig.4.6.4). The core makeup tanks are designed to provide makeup for small RCS leaks at any pressure and to provide safety injection for small LOCA. These tanks utilize gravity for their injection force; they are located above the reactor coolant loops and have a pressure balance line connected to the top of the tank to equalize pressures. Each of the core makeup tanks has a capacity of 2000 ft^3 (56.6 m^3) and is maintained full of borated water. The tanks are designed for the same pressure as the RCS. The discharge from the core makeup tank is routed from the bottom of the tank to a separate safety injection nozzle on the reactor vessel; the injection water enters the cold leg downcomer region. This discharge line is normally isolated by two parallel air operated valves that fail and open on loss of air pressure or control signal. The accumulators are required for large LOCA's because of the need for very high makeup flows to refill the reactor vessel downcomer and lower plenum. The accumulator tanks contain borated water with an overpressure of nitrogen.

For the longer term source of makeup water, in order to get injection from the in-containment RWST, the RCS pressure must be reduced to about 10 psig (0.7 bar) above containment pressure. An automatic depressurization system is provided to accomplish this function. A series of valves connected to the pressurizer provide a phased depressurization capability. The RCS depressurization valves are also shown in Fig.4.6.4. After about 10 hours, the in-containment RWST will also empty; however, by that time, the containment will be flooded up to above the reactor coolant loop level and the water in the containment will drain by gravity back into the RCS. A stable long term core cooling/makeup to the RCS is thus established. The passive containment cooling system supports this operation by removing heat from the containment; steam released from the RCS is condensed and the condensate drained back down so that it is available for recirculation back into the RCS.

This passive safety injection system eliminates the need for high and low head safety injection pumps as well as the need for the matrix of safety grade/ redundant active support systems such as the diesel generators, and cooling water systems.

4.6.3.3 Passive Containment Cooling and Radioactivity Control

The passive containment cooling system (Fig.4.6.5) utilizes the steel containment vessel as a heat transfer surface. The surrounding concrete shield building is used along with a baffle to direct air from the top-located air inlets down to the bottom of the containment and back up along the containment vessel. In addition, a water storage tank is supported by the shield building at an elevation suficient to allow gravity drain of the water on top of the steel containment vessel. The air and the evaporated water exhaust through an opening in the roof of the shield building.

The passive containment cooling system is initiated automatically by indications of inadequate containment cooling such as high containment pressure or temperature. The elevated passive containment cooling system water storage contains sufficient water for three days of operation. In the unlikely situation that the operator did not take any action and the water storage tank emptied, the natural convection of air would be sufficient to prevent containment failure although the pressure would rise slightly above the design pressure. Since the normal containment fan coolers are not required for accident mitigation, they will not be safety grade or covered by technical specifications in the AP600.

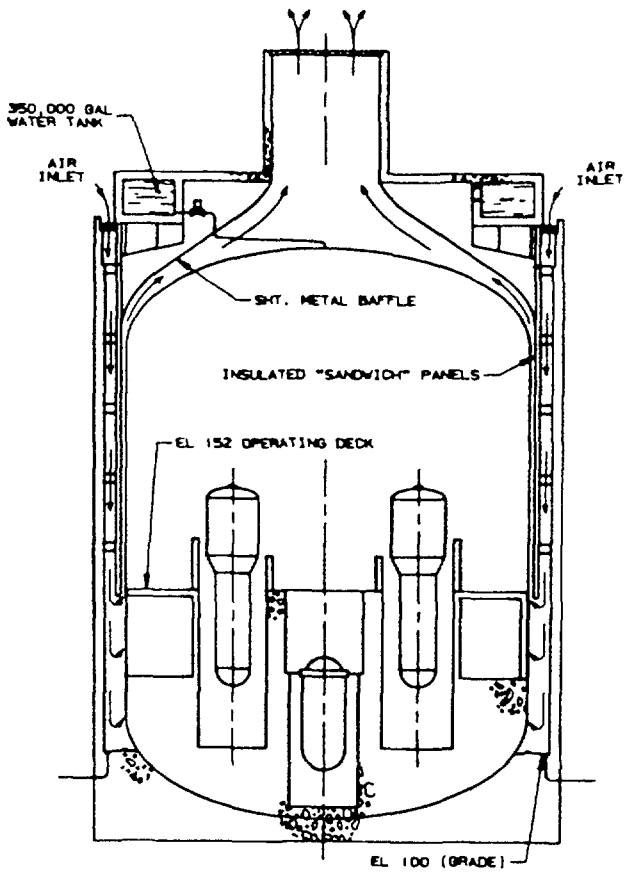

FIG.4.6.5. AP-600 passive containment cooling (air/water evaporative cooling).

In order to reduce the off-site doses for design basis accidents, it is necessary to reduce the concentration of iodine and cesium that is in the containment atmosphere. The AP600 has an accumulator type containment spray system, whch consists of two tanks containing borated water and several tanks containing compressed nitrogen. These tanks are located outside of the reactor containment. The system is actuated by the presence of high activity in the containment. The passive spray system will provide a spray flow of 1100 gpm for at least 30 minutes with the spray continuing for another 15 minutes at reduced flow rates. Spray additive tanks are not required.

4.6.3.4 Non-Safety Systems

The design of the AP600 passive safety systems has eliminated some of the systems that are currently used in PWR's. The auxiliary feedwater system, the residual heat removal system, the essential service water system, and the boron recycle system have been eliminated. The non-safety functions of the auxiliary feedwater system and the residual heat removal system are provided by the startup feedwater system and a modified spent fuel cooling system. The non-safety functions of the essential service water system are met by the normal service water system. The recycling of boron and water back to the chemical and volume control system has been eliminated by a reduction in effluents produced and taking credit for better fuel performance (fewer fuel failures). The effluents have been reduced by providing plant load follow with control and grey rods, longer fuel cycle, and by the use of canned reactor coolant pumps. The main design simplifications that have been made to the AP600 systems associated with the nuclear island, relative to current plants are summarized in Table 4.6.2.

TABLE 4.6.2
AP600 PLANT DESIGN SIMPLIFICATIONS RELATIVE TO CURRENT TWO LOOP PLANT

Equipment	Current Plants	AP600
Pumps-Safety	25	None
-Non-Safety	23	22
Tanks	42	27
Heat exchangers	14	8
Valves-Remote	350	130
-Manual > 2" (5 cm)	700	250
Pipe Length > 2" (5 cm)	9400 m	3400 m
Evaporators	2	None
Diesel Generators-Safety	2	None
-Non-Safety	None	1

4.6.4 Plant Arrangement and Construction Methods

A major objective of the AP600 program is to evaluate methods for minimizing construction schedules and cost. The most direct means for reducing construction time and capital cost is to reduce the required building volumes. A significant step towards obtaining this objective will be accomplished with the application of the passive safety systems. The passive safety systems play a major role in reducing the total building

volumes required since many of the conventional mechanical and electrical safety systems are eliminated from the plant's overall systems.

The plant design also utilizes many of the features of the Westinghouse Advanced Control Room, Integrated Protection System, and the Integrated Control System. The application of these advanced designs which incorporate distributed logic cabinets, multiplexing, and fiber optics is also instrumental in significantly reducing building volumes.

Another method of achieving building volume reduction, as well as shortening the implementation is to modularize a major portion of the plants systems and building structures by utilizing the modularization concepts that have been developed by the ship building and process industries. The concept of fabricating a major portion of a nuclear power plant in an offsite facility and transporting the prefabricated, pretested, preinspected modules to the plant site by barge, rail, or truck for integration with the onsite construction is being evaluated to establish the capital costs and design and schedular impacts.

The savings were achieved through the improved labor productivity and stable working environment at the offsite fabrication facilities and the overall construction schedules were shortened through parallel onsite and offsite activities. Ongoing efforts are the development of detailed engineering drawings, fabrication/construction techniques, construction schedules and cost estimates which will estabish the feasibility and cost/schedule benefits for the modularization approach to the construction of a nuclear power plant.

Fig.4.6.6 depicts the plant arrangement evolved at the end of the conceptual design study completed in 1986. There is significant reduction in the building volumes compared to previous 600 MWe plants. In particular, the seismic building volumes have been greatly reduced (60%). It is anticipated that the combined effects of plant simplification and modularization will enable a 3-4 year construction schedule to be attained.

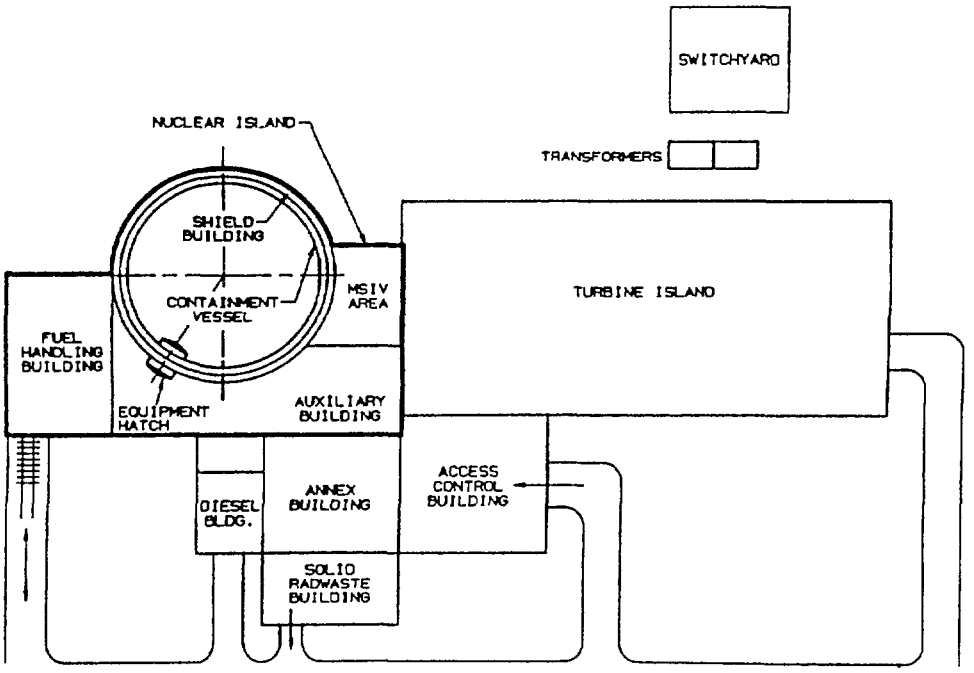

FIG.4.6.6. AP-600 overall plant layout.

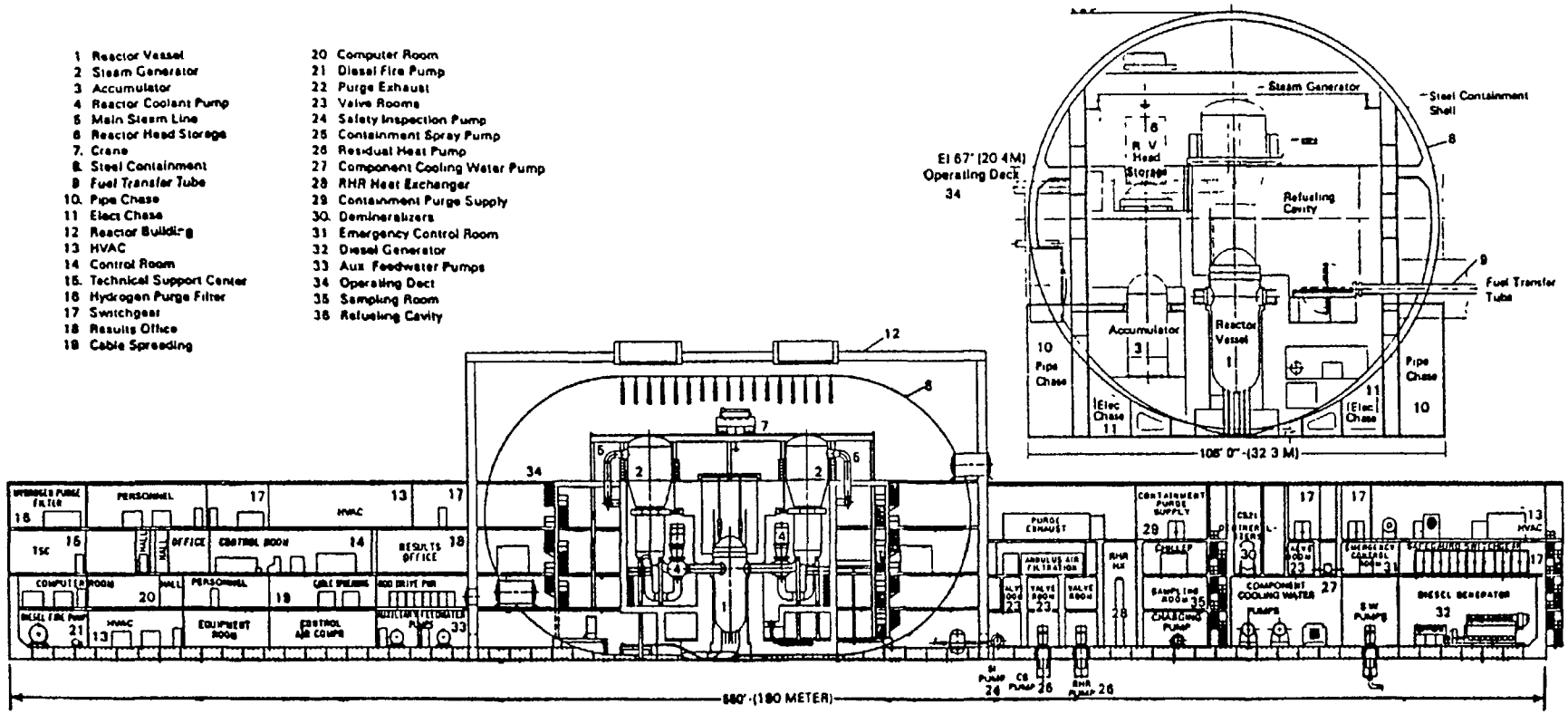

FIG.4.7.1. NUPACK general arrangement.

4.7 WESTINGHOUSE NUPACK PLANT [86] (UNITED STATES OF AMERICA)

The NUPACK modularization concept is based on the proven technology of the two-loop 600 MWe PWR plant, updated to the current safety criteria and instrumentation and controls. The Westinghouse two-loop plants of 500 - 600 MWe rating have had exceptionally good performance relative to other Westinghouse and other LWR plants generally. Both capital cost and overall power cost experience have been favorable relative to experience with larger plants, in apparent defiance of scaling laws. (One factor responsible for the good performance may be the coincidence that these plants were purchased by utilities that have displayed high-quality management and operation). The objectives of this approach are: low cost, short construction schedule (four years), factory quality assurance (at a shipyard), and low risk to the buyers. The plants would be built to a prelicensed standard design.

The NUPACK concept divides the "scope of supply" in two: (a) factory (shipyard)-built reactor plant module and (b) conventional site-constructed balance-of-plant (BOP). The shipyard module and site BOP proceed on parallel 3-yr schedules. The tested and prelicensed NUPACK module is barge-delivered for installation with the BOP basemat and containment. Interconnection, completion, and startup testing in 1 yr. yields a 4-yr. schedule. High quality and efficiency are achieved from the division of work forces, factory (shipyard) specialization, prelicensed standardization, and learning curves with productivity enhancing quality assurance systems.

The NUPACK module contains reactor, steel containment, and most safety-related systems ("nuclear island"). This module (Fig.4.7.1) is built into a floatable barge, sized for shallow draft inland and coastal waterway transport to site. Over ocean or movement along the coasts, the NUPACK module is on a transporter or floating drydock, as has been utilized for chemical process modules. This combination can reach all coasts, great lakes, and the central U.S. river system accessing - 80% of the connected electric load.

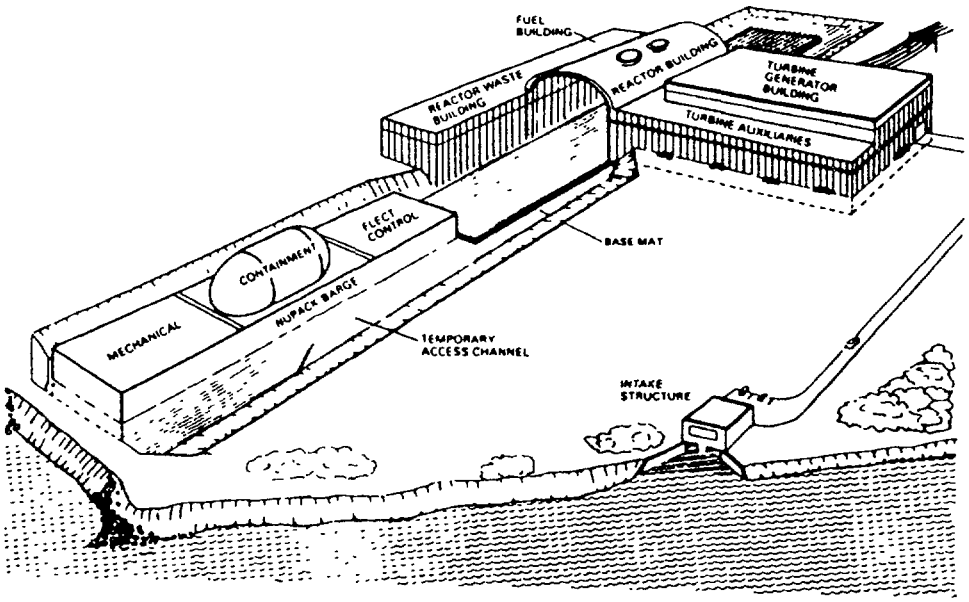

FIG.4.7.2. NUPACK pre-installation at site.

The reactor basemat and shield building (and the BOP) are constructed on-site. Installation of the barge-mounted NUPACK calls for a temporary basin and earthworks to receive, raise, and move the module onto the basemat under the shield building, as may be inferred from Fig.4.7.2. The NUPACK barge is floated over the basemat in the shield building and fixed to the basemat and finished to achieve conventional installation, ready for final tests and startup.

5. PIUS TYPE REACTORS

In this chapter, reactor designs that are radically different from current technology and reactor concepts are described. These designs are in the category of "developmental" designs.

In this context, PIUS type reactors means various adaptions of the ABB-ATOM PIUS design philosophy and principle (PIUS is an acronym for Process Inherent Ultimate Safety). This philosophy aims at protecting the core against overheating and subsequent fuel damages in accident situations, as this will guarantee absence of significant releases of radioactive matter to the environment (the "ultimate" safety), i.e. there will be no severe accident within a given time. The design principle further requires that the safety shall be based on process functions which rely on simple immutable natural laws (such as gravity and thermo-hydraulics).

5.1 SECURE-P REACTOR CONCEPTUAL DESIGN [87-90] (SWEDEN)

The PIUS design philosophy was established when ABB-ATOM started the development of the SECURE reactors for district heating, and the implementation of the PIUS design principle can be expressed in two ground rules [9]:

Rule 1:
- The core shall under all credible circumstances remain submerged in water for a long enough time period following any incident that outside intervention to correct the situation can be counted upon even under the most extreme conditions. For design purposes this "grace period" has rather arbitrarily been set to one week.
- At no time during the "grace period" following the initiating incident shall reliance be placed on operator action or function of active, potentially failure prone devices such as pumps, valves, etc. for supply of cooling water to the core.

Rule 2:
- The power generation in the submerged core shall be limited to prevent appreciable cladding damage due to insufficient cooling capability of the submerging water (as in operation during dryout conditions).

which shall be fullfilled:

- in spite of unfavourable combinations of operator errors (including total absence of operators - walk away situations);
- in spite of reasonably conceivable actions by saboteurs or terrorists, preferably including even total station take-over for a limited period;
- assuming all reasonably conceivable external events, including non-nuclear military attack using standard weapons.

It should in this context be noted that the "non-reliance" on active mechanical devices excludes the use of control rods as ultimately responsible for safe shutdown of the reactor.

The development work at ABB-ATOM on the SECURE type reactors has been going on for more than a decade, and work on the conceptual designs of the SECURE-P (or often simply PIUS) reactor, the version for generation of electric power, has been in progress since the early 1980s. One of the early design versions was a 1600 MWt, 500 MWe plant, with one core and four steam

generator/coolant pump loops, installed inside a large concrete vessel. This version was followed by several versions comprising modular concepts, and in 1987 a design version of 2000 MWt, 640-650 MWe plant, employing one core and four steam generator/coolant loops outside the concrete vessel has been thoroughly studied. Some key design data for the latter version are listed in Table 5.1.1, together with data for the early four-loop design.

TABLE 5.1.1

SOME KEY DESIGN DATA FOR THE SECURE-P REACTOR

Thermal power	MW	1612	2000
Electric power (net)	MW	500	640
Core exit temperature	^oC	293	289.8
Core inlet temperature(full power)	^oC	261	260
Core coolant flow	kg/s	9980	13000
Primary system pressure (pressurizer)	MPa	9.0	9.0
Number of fuel assemblies		193	213
Number of fuel rods/assembly		232	316*
Fuel enrichment, reload fuel	%		3.5
Core height (active)	m	1.97	2.50
Core diameter (equivalent)	m	3.84	3.76
Core pressure drop (dynamic)	MPa	0.027	0.039
Number of steam generators		4	4
Steam pressure (steam generator exit)	MPa	4.0	4.0
Steam temperature	^oC	255	270
Number of reactor coolant pumps		4	4
Pool temperature (normal operation)	^oC	50	50
Concrete vessel cavity diameter	m	13	13.4
Concrete vessel cavity total height	m	35	34
Concrete vessel cavity volume	m^3	4350	3820

* Up to 32 fuel rods containing BA (Gd_2O_3)

5.1.1 Prestressed Concrete Pressure Vessel

For keeping a sufficiently large quantity of water directly available to the core without the need for the functioning of pumps, valves etc. and to exclude leakage, the only way is to use a multibarrier prestressed concrete pressure vessel. The inner surface of the concrete vessel is covered by a leak-tight stainless steel liner. However, it must in principle be assumed that cracks can occur in this liner. For this reason, another steel membrane is cast into the concrete about one meter behind the liner. This is a feature adopted from the containment structures for the BWR reactors supplied by ABB-ATOM. No leakage of these membranes has ever been found. With these provisions, loss of water inventory for core cooling is not physically credible during a "grace period" of at least one week following any conceivable incident or accident. For a 2000 MWt reactor, the prestressed concrete vessel is a massive structure, with a 29 m x 29 m cross section, 45 m height and a cavity diameter of 13.4 m , and a total weight of 85 x 10^6 kg. In the early design version the vessel "head" was actually like a drawer in a chest. There was an elastic (toroid) seal between it and the upper opening of the cavity, and when pressure was applied inside the latter the force on the "drawer" was transmitted to the upper support structure of the

prestressed concrete vessel and from there to the vertical tendons that are wrapped around the whole structure. After opening of the elastic seal, the head could be slid out of position and full diameter access was obtained to the cavity for fuel handling, vessel internals maintenance etc.

In the most recent version, the upper support structure (the yoke) has been removed, and the concrete vessel cavity diameter reduced at the upper end (a bottleneck structure) to make a conventional vessel cover design possible. A steel extension is structurally interconnected with the concrete vessel, and a pressurizer dome is located at the top of this extension. The intermidiate section is provided with nozzles for the pipe connections to the steam generators (coolant in- and outlets), which are installed in pairs on two sides of the concrete vessel. Being in many ways the key component, the concrete vessel has been thoroughly analyzed. Detailed stress analysis by finite element calculations, seismic response analysis for different siting conditions, construction sequence studies and costing have been carried out. It can be confidently said that this vessel can be constructed without any need for additional R&D work beyond that carried out in the comprehensive decade-long programme at the Studsvik research centre. To protect against over-temperature in the concrete, cooling pipes are arranged on the concrete side of the liner in the upper part of the cavity, and on the pool side the walls are provided with a heat shield of cooling coils that during normal operation are used for removing heat transferred from the hot primary system to the pool, and at coolant pump trips (or other transients) for removing heat from displaced primary system water.

The detailed design and construction of such a vessel could be at a fixed price without further development work. This is due to the very extensive use of prestressed concrete structures (e.g. for reactor containments) and to the experience of the concrete vessel project. This had as its main item the construction and testing of a large (internally 4 m x 2 m) model for 85 bar steam pressure and a long sequence of tests with it, culminating in hydrotesting at 215 bar without failure. The thermal insulation tests referred to above were carried out in this vessel. Thus, the cornerstone of the PIUS design rests on a solid foundation. It can also be noted that the feasibility of the concrete vessel design has been confirmed by the other companies.

The location of the steam generators inside the prestressed concrete vessel made a special design necessary. Maintenance activities, such as leak testing and plugging, had to be made from above, and the special design made all critical parts directly accessible from above to service personnal, after removal of the vessel head. With the steam generators located outside the concrete vessel, these concepts are no longer valid, and a rather conventional once-through steam generator with straight tubes may be used.

5.1.2 Reliance on the Laws of Thermohydraulics and Gravity for Safety Functions

For implementation of the PIUS principle, it is required that only the laws of thermohydraulics and gravity can be relied upon in situations with system failures, without any dependence on active devices, or operator action. The way to achieve this is to keep an all-fluid system in gravitational non-equilibrium balance (See Fig.5.1.1). In this context, it should be noted that other factors also contribute to the safety, e.g. a suitable choice of the moderation ratio for the core to achieve negative reactivity coefficients. In this aspect, there are important differences between the stringent PIUS philosophy and other safety concepts relying on

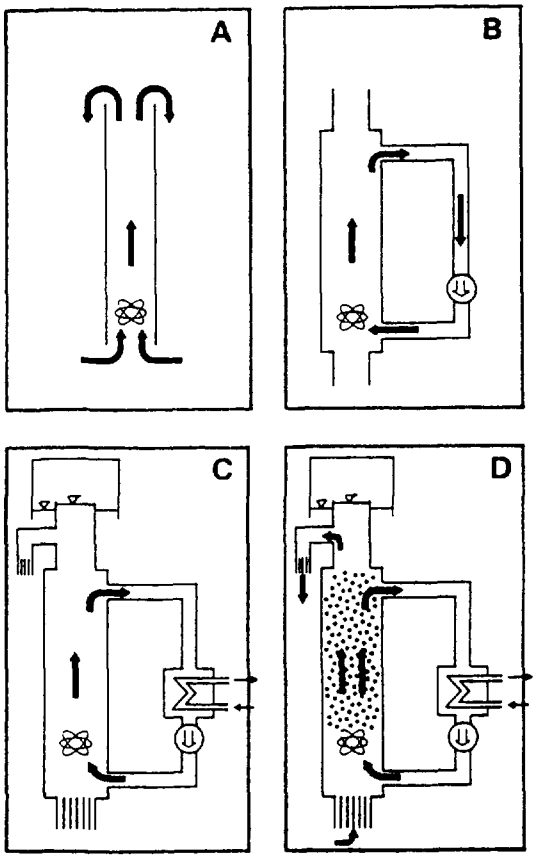

FIG.5.1.1. Operating principles of the PIUS primary system.

the movement of some solid bodies (e.g. check valves) which can be frustrated anyhow. In the SECURE type reactors employing the PIUS principle no such components are involved.

5.1.3 The Principle of the SECURE-P Flow Arrangement

The principle of the SECURE-P flow arrangement is shown in Fig.5.1.2. In the primary system, the temperature is high enough for power generation. The pool water temperature is kept low(about 50°C). Therefore, a stable layering of hot water from the primary system above cold pool water can be accomplished at both the lower and the upper interface levels between the primary system and the pool. The dynamic pressure drop across the core and adjacent sections of the circuit must be equivalent to the product of the level difference between the upper and lower hot/cold interface level (H), the difference in density between the hot and cold fluids ($\rho_c - \rho_h$) and g, in order to have a pressure balance between primary system and pool at both interfaces. The vertical position of the lower hot/cold interface is measured by temperature instrumentation that controls the speed of the pump(s). If the interface tends to move upwards, the pump speed is increased to reposition the interface to its intended level. The upper interface is not directly controlled in this way, but its vertical position is monitored, and adjustments are made by controlling the reactor water withdrawal rate in the reactivity control system.

Should the core tend to approach dryout conditions, e.g. through loss of the secondary side heat sink (feedwater) or overpower, the primary circuit first heats up and may reach the boiling point. The resulting

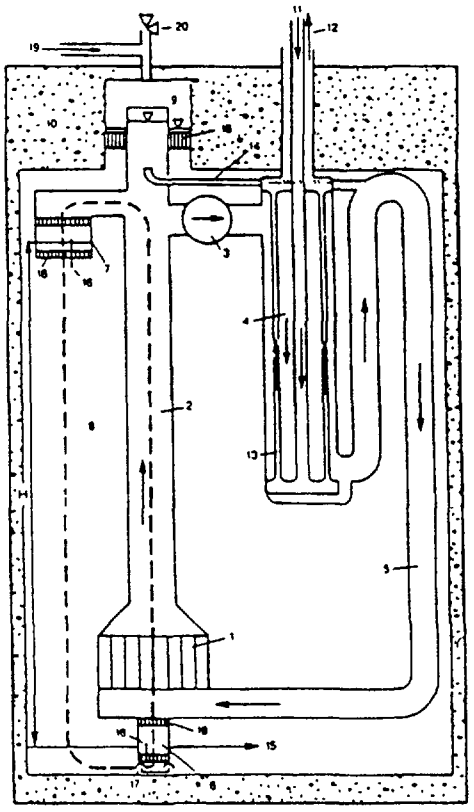

Key: 1 - Core, 2 - Riser, coolant density ρ_h, 3 - Primary recirculation pump (wet motor), 4 - Once-through steam generator, 5 - Downcomer, 6 - Lower hot/cold interface, 7 - Upper hot/cold interface, 8 - Cold (about 50°C) pool water containing 2200 ppm boron, density ρ_c, 9 - Steam volume of pressurizer, 10 - Prestressed concrete pressure vessel, 11 - Feedwater to steam generator, 12 - Steam to turbine, 13 - Steam generator tubes, 14 - Siphon breaker pipe, 15 - Water to purification and separation by distillation, 16 - Temperature sensors for locating hot/cold interface level, 17 - Gas lock arrangement for startup, 18 - Honeycomb structure to prevent horizontal flow, 19 - From electrical boiler, 20 - Pressure relief valves

Dashed line indicates always open natural circulation circuit. Core pressure drop is approx. $H \cdot g \cdot (\rho_c - \rho_h)$.

FIG.5.1.2. Principal flow arrangement used in SECURE-P.

decrease in density, particularly in case of occurrence of steam bubbles in the riser above the core, further increases the buoyancy of the primary coolant relative to the cold pool water and forces more flow through the core and the riser. The pump speed control tries to counter this by increasing the coolant return flow to the core inlet. The flow control has a range of only a few percent, however, and after having attained its maximum flow rate, the pump can no longer prevent inflow of borated water from the pool through the lower hot/cold interface region. As a result of this inflow the reactor is shut down or its power limited to a safe value. Thus the thermohydraulics of the system provide self-protection against unsafe conditions, as required by the PIUS principle.

5.1.4 The Reactor Core

The core is nuclearwise a low-rated PWR core which uses open lattice 18 x 18 PWR type fuel assemblies that are only about half the height of those of a conventional PWR. The fuel rods are 9.5 mm o.d. as in other PWRs, with a linear heat rating of 11.9 kW/m. The core power density is 72.3 kW/L. The core coolant flow velocity is low, and the resulting core pressure drop at full power is about 0.5 bar, including inlet orificing. Control rods in the normal sense are not considered compatible with the PIUS design philosophy and are not used. The reactor power is controlled by means of the coolant boron content and temperature only. For this purpose, a relatively strong negative moderator temperature reactivity coefficient, and a rather constant boron concentration in the primary circuit at full power throughout the cycle are needed. Each fuel assembly comprises eight burnable absorber (gadolinia) rods, which serve to suppress excess reactivity at the beginning of a fuel cycle, and the use of gadolinia instead of boric acid for burnup compensation makes it possible to keep the primary system water boron content at full power low throughout the cycle.

Because of the negative moderator temperature coefficient, a nuclear startup procedure can be performed, and very rapid power changes can be accomplished quite simply. During normal operation, the core outlet water temperature is maintained constant by means of the reactivity control system, whereas the inlet water temperature varies with the power level. By increasing the feedwater and steam flow rates, the core inlet water temperature will decrease, and so will the average temperature of the coolant in the core, resulting in an increase in reactor power. The cooling down of the primary system water inventory provides the extra energy needed for the rapid response. By means of the reactivity control system (the boron content control) the reactor power can be varied with a rate of change of about 2% per minute. Utilization of the negative moderator temperature reactivity coefficient makes much more rapid changes possible. A 20% increase in turbine output can be accomplished with a time constant of 10 seconds.

Neutron absorbers which can be dropped into the core by application of hydraulic pressure could in principle be suspended above the core. Such rods are not foreseen in the present design, however, since there is no need for them. They may possibly be included for the first SECURE-P (demo) reactor in which the basic PIUS self protective properties shall be finally verified which in turn implies no need for neutron absorbers.

5.1.5 The Nuclear Steam Supply System

The primary system pressure is 9.0 MPa instead of 15.0 MPa in a conventional PWR plant, and the secondary side steam pressure is correspondingly lower, 4.0 MPa compared to about 7.0 MPa. This gives a penalty of about 2% units in thermal efficiency in the turbine cycle (typically 32.0 vs 33.5%). This penalty in terms of fuel cycle costs is expected to largely be compensated by lower power plant operation and maintenance costs.

The core exit flow passes through the long vertical riser to an annular opening (the upper conduit opening referred to above) which connects it to the pool via the upper hot/cold interface. During operation, the flow exiting the riser is sucked into a plenum immediately above the riser's upper end and there is no net flow through the opening. From this plenum the flow passes the outlet nozzles and continues to the four steam generators, which are suspended at the external walls of the prestressed concrete vessel. The flow is sucked through the tubes of the steam generators into the main coolant (recirculation) pumps, one at the lower end of each of the four steam generators, and then pumped back to the reactor vessel inlet nozzles. From there it passes through a siphon breaker and down through the downcomer to the core inlet plenum, which is directly connected to the pool via the lower hot/cold interface region.

The steam generators are of the once-through type, with feedwater entering at 210°C and superheated steam of 4 MPa and 270°C leaving. Steam generation is on the outside of the tubes. Each of the four steam generators has 6348 tubes with 15.9 mm o.d., 14.0 mm i.d., and 15 m long, and delivers 253kg/s steam at full power. On the shell side the tubes are spaced by passing through tube support plates.

The main coolant pumps are of the wet motor type used by ABB-ATOM in all BWR plants delivered by the company even though the pump size is significantly larger.

An undesirable aspect of locating the primary system in the pool is the necessity of providing thermal insulation in high pressure water. It is necessary to base this insulation on stagnant water rather than stagnant air (or gas), which is usually the case. It may consist of fine mesh stainless steel gauze interlayered with thin sheets as used in French gas cooled reactors. Thermal performance and corrosion characteristics of this insulation have been tested in water in the large model concrete vessel at the Studsvik research centre, and satisfactory results have been obtained. In the SECURE-P design, the insulation will be placed on all hot surfaces of the primary system.

5.1.6 Modular Design

The multi-loop configuration of the 1600 MWt reactor involved a crowded arrangement of the components inside the concrete vessel. The large number of components and the amount of primary circuit piping in the concrete vessel lead to excessive space obstruction for fuel handling and maintenance and to a large surface needing expensive wet thermal insulation. To cope with this problem, and in addition due to cost consideration, the modular approach was attempted. In this, one core was served by one steam generator and one reactor coolant pump. An initial design (with a cold leg pump), and a modified module design (with a hot leg pump) was used for a detailed design study of a 600 MWe power plant unit, comprising three such modules (without interconnecting piping) in a common concrete vessel of about the same dimensions as those for the 1600 MWt unit. This design study is documented in a six file PSID (a preliminary safety information document) which was compiled for a possible review by the US NRC (the Nuclear Regulatory Commission in the USA).

Supplementary cost information on the prestressed concrete vessel, obtained later, indicated that it would not be more expensive to build three smaller vessels, one for each module, than to build one large vessel containing three modules, and for that reason it has been decided that a design version with a single module, utilizing a steam generator with steam generation inside the tubes should be studied. The power level of this module would be 1000-2000 MWt, corresponding to an electric power output of 300-600 MW.

5.1.7 External Loop Design

During 1987, a design version of PIUS with external steam generators and reactor coolant pumps has been studied in a joint effort by ABB-ATOM and ANSALDO Spa of Italy, in an attempt to utilize proven components and technology as far as possible, with the aim of reducing the amount of required components and equipment development and verification, i.e. to make an early commercial introduction possible.

Some aspects of this design have been mentioned above. Similarly to the 1600 MWt version there is a single core and there are four steam generator/reactor coolant pump loops. The reactor core power is 2000 MWt, and the external loops comprise conventional once-through steam generators and standard, glandless type, wet motor reactor coolant pumps. The general arrangement is outlined in Fig.5.1.3, and some key data are listed in Table 5.1.1. For refuelling, the components above the core are first removed and placed in a storage pool, as in a BWR.

The piping of the external loops and the steam generators with the pumps are installed within a containment structure, which is designed to minimize releases to the environment in the event of a major pipe rupture.

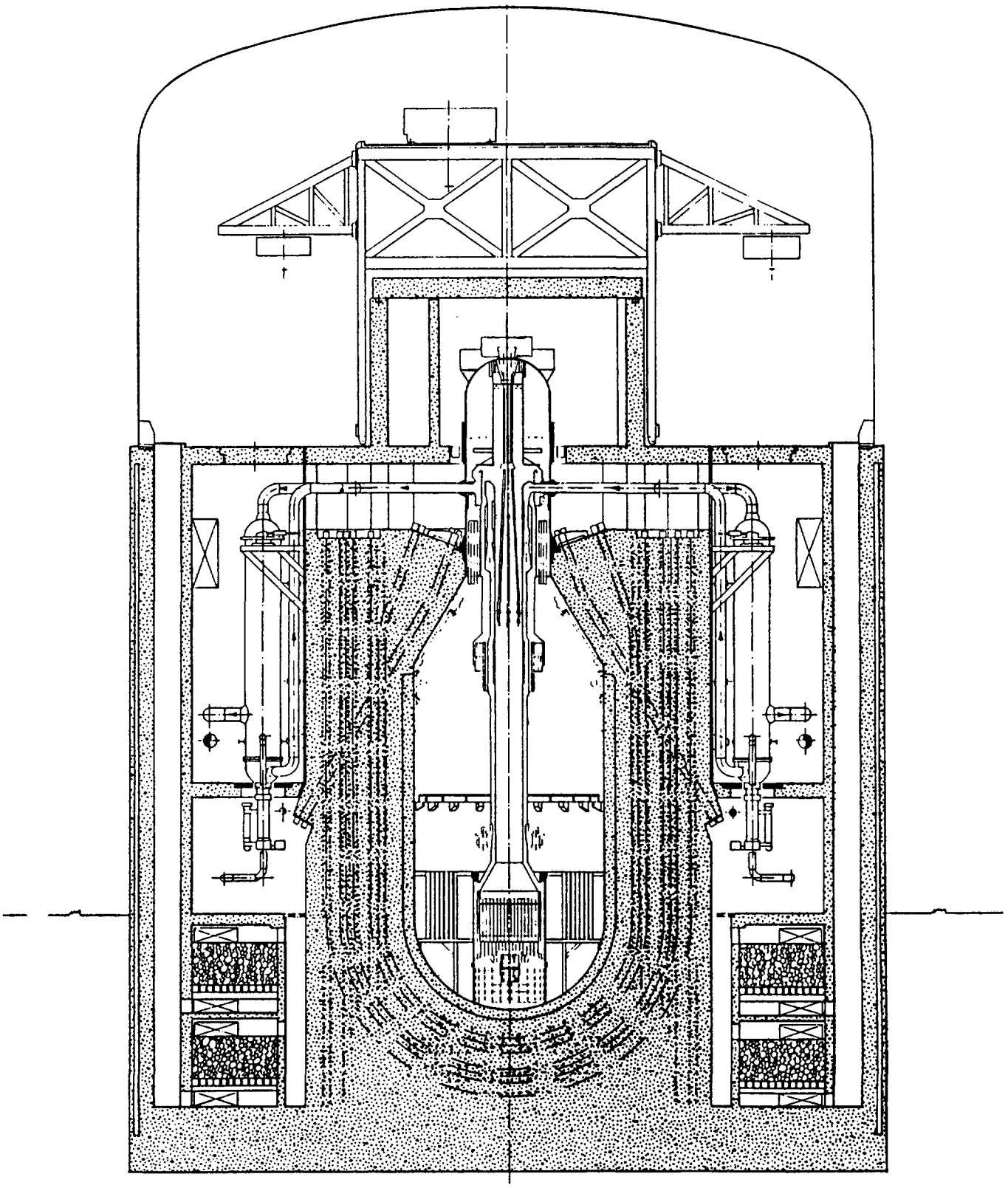

FIG.5.1.3. General arrangement of the 2000 MW(th) reactor with external loops.

The containment is a pressure-suppression type containment, with the secondary volume (the wetwell) arranged at the bottom of the building, i.e. quite similar to typical BWR containments. The wetwell comprises a condensation pool and a compression volume, and the condensation pool water is kept cool by a separate cooling circuit.

In the event of a pipe rupture inside the containment the steam and gases will flow down into the condensation pool via vent pipes, and the noncondensable gases will collect in the compression volume. In this way the peak of the containment pressure will be limited to less than 0.3 MPa (3 bar abs.), and any radioactivity release will be small even if all isolation valves were to fall. (The self protective features of the plant will shut down the reactor and cool the core; a major LOCA will not cause any fuel damage). The "containment" structure and a superstructure, enclosing the upper part of the reactor vessel and some water pools, are made strong enough to withstand earthquakes and the impact of a crashing aircraft whereas the upper "dome" of the building, which encloses the reactor service room and service pools, is designed to withstand earthquakes only. The auxiliary systems and the balance of plant systems are designed and built as non-safety-grade systems. The reactor water cleanup and the reactivity control systems, together with the systems for handling of radioactive waste, are installed in a building with strong roof and walls, whereas the other buildings are relatively light structures.

A typical turbine plant incorporates moisture separation and steam reheating between the high and low pressure turbines, a feedwater tank, and forward pumping of feedwater drainage. At a circulation water temperature of 15-20 ^{o}C the net electric output of the plant will be about 640 MWe (about 650 MWe at 7°C cooling water temperature).

5.1.8 Cost Considerations

Comprehensive internal cost estimates have been made for several of the design versions. The 500 MWe plant with the 1600 MWt core was found to be competitive with a conventional LWR of the same size, and the 600 MWe plant with three modules was found to have lower specific costs than a 700 MWe standard BWR plant. The external loop version requires inclusion of the containment structure, which quite obviously involves increased costs, but still the costing analysis has indicated lower specific costs than for the ASEA-ATOM standard 700 MWe BWR plant. The construction shedule that has been worked out for the external loop plant shows a construction period of 49 months, in fact shorter than for the BWR plant, and thus the specific investment cost including IDC would also be lower.

5.1.9 Component Development

Component development activities so far have centered on the two items which are basic to the PIUS concept, namely the "density locks" and the wet thermal insulation. As mentioned above, the prestressed concrete vessel is not considered an item needing further development work.

5.1.9.1 Density Locks

In the density locks (or thermal barriers) hot primary system water with a more or less low boron content is layered above the "cold" highly borated pool water. The function of the density locks is to give unrestricted access of the latter to the core in emergencies while minimizing the ingress of boron during normal operation. The principle of

stable layering of hot water above cold is of course well established and used e.g. in hot water storage vessels for district heating grids. However, the use of this principle for the PIUS reactor entails some problems that must be evaluated experimentally before practical feasibility can be considered proved. The principal purpose of this evaluation is to show that the rate of transport of boron (i.e. boric acid dissolved in the water) across the thermal gradient is low enough to constitute a tolerable burden on the cleanup system provided for removing boron from the coolant.

The experimental program carried out during a period of more than three years has covered the following stages:

1. Laboratory bench scale experiments, using salt solutions for creating a density gradient, to study basic hydrodynamic phenomena.
2. Conservative theoretical computation of turbulence in the pool and primary system adjacent to the density locks.
3. Full scale study of the impact of this turbulence on the density locks, indicating the extent of vertical oscillating motions taking place in the tube bundles constituting them. (These vertical oscillations are the cause of the transport).
4. Full scale, full temperature and pressure study of the actual amount of transport across a density lock tube subjected to the oscillatory motions.

As a result of this programme, the phenomena (some of them quite unexpected) taking place in a density lock are now well understood and a quantitative base for their design exists. It has indeed been confirmed that the amount of boron transport across them in practice will be much less than what could be tolerated by the water cleanup system.

5.1.9.2 Wet thermal insulation

For thermal insulation of the hot circulating reactor coolant from the "cold" (about 50°C) pool water at the high (nearly 100 atmospheres) pressure prevailing in the concrete vessel, a water filled insulation appears to be the only possibility. The use of gas filled insulation structures resisting the pressure and subject to the thermal gradient has not been considered feasible. In water-soaked insulation, the lower limit of effective thermal conductivity is that of stationary water. Even a moderate amount of natural convection causes strong deterioration of the insulating properties, and the insulation therefore must be designed with sufficiently narrow water pockets to prevent natural convection.

A very extensive test programme with a wet thermal insulation was carried out in Sweden during the 1970's in connection with the Scandinavian prestressed concrete vessel programme (mentioned below). An insulation material used in the French gas cooled reactors was tested. It consists of mats of stainless steel mesh interposed between thin stainless steel foils. The PIUS design has up to now been based on the results of this programme, which proved the feasibility of this type of insulation. Presently, a complementary programme using the insulation employed in the British AGR type reactors is being planned at the ABB-ATOM laboratories. This insulation consists of specially arranged packages of thin sheets of stainless steel. A special test rig has been built and tests are to be initiated in the near future.

5.1.9.3 Steam generator

In most of the design alternatives that have been studied, it was considered necessary to use a steam generator of rather special design. Recent work on the "300 MWe" module indicates that this may not really be necessary, and in the external loops version the steam generators may definitely be of quite conventional design. As a consequence, testing work may be much more limited than was earlier thought necessary and may possibly be deferred to the project stage.

5.1.10 Overall System Simulation

A special computer simulation programme, RIGEL, has been developed to study the PIUS system response in all conceivable (and some practically inconceivable) transients. By means of RIGEL it has been confirmed that, as far as can be determined on the basis of computation, all transients are terminated in a state where the core is shut down and cooled in natural circulation or stabilized at a safe power level without having experienced damage.

Some simulated transients for the 3 module 600 MWe plant are presented here as typical examples. No corrective action is assumed in any of the cases, neither by the operator, nor by any automatic safety system. For each transient, the least favourable initial conditions are assumed, and the following controllers are assumed to be active:

1. pressure controller (opens the pressurizer relief valve if pressure exceeds 10 MPa),
2. the main coolant pump speed controller (designed to keep the lower hot/cold interface in place). The controller can cause a maximal 5% increase or decrease in the pump revolution rate.

The controllers tend to exacerbate the transients. For example, the pump controller tries to prevent the borated pool water from entering the loop and thus delays the shutdown by boron ingress from the pool caused by thermohydraulics.

Main Coolant Pump Trip

When the pump pressure head is lost, the pressure on the loop side of the lower density lock decreases. It ceases to balance the hydrostatic pressure in the outer pool, and the borated pool water starts flowing into the loop. As a result, the reactor is shutdown within seconds. Because of the temperature transient involved, the pump trip is not envisioned as a standard shutdown procedure. Normally, the reactor is shutdown by means of boron injection, and in transient situationa a scram is accomplished by opening a valve between the pool and the primary loop, close to the reactor inlet plenum. In all the other transients described below, the pump is assumed to keep running and no scram is assumed to occur.

Feedwater Pump Trip Without Scram

After a loss of feedwater supply, the secondary side of the steam generator boils dry in ~ 20 s. The heat extraction from the primary loop drastically deteriorates after 10 s. About 30 s after the loss of feedwater, hotter water reaches the reactor, depressing its power due to the negative temperature reactivity coefficient. The water temperature in the riser section of the loop increases until the buoyancy of the water

overrides the coolant pump controller. The borated pool water enters the reactor core at 70 s and shuts the reactor down. No boiling occurs at any time. (A brief void formation in the riser could occur, as symbolized in Fig.5.1.1.D).

Main Steam Line Break Without Scram

A sudden loss of pressure on the secondary side of the steam generator results in flashing and a drop in the water temperature. The heat extraction from the primary side increases. This episode is brief, however, since the secondary side flashes dry in ~ 20 s. The plug of colder water in the primary loop causes a short reactor power excursion, but there is no dryout (DNB). Afterwards, the transient progresses similarly to the feedwater pump trip, since this pump is turbine driven and stops immediately following loss of steam pressure.

Depressurization Without Scram

The pressurizer relief valves are assumed to open and remain stuck open. Steam from the pressurizer escapes at an initial rate of 100 kg/s. Flashing begins in the riser at 40 s and spreads gradually to most of the loop. The effect of increased buoyancy in the riser on the inflow of pool water is counteracted by an overpressure in the loop due to flashing (relative to the pool pressure). The pressure difference across the lower density lock changes sign several times, leading to an intermittent inflow of borated water. The void in the core is alternately extinguished and produced by flashing. Initially, the reactivity effect of the increased boron concentration in the loop is insufficient to compensate for the coolant temperature drop. Finally, the boron content in the loop increases enough to shut down the reactor permanently.

Continuous Boron Dilution (Uncontrolled Power Increases) Without Scram

Continuous boron dilution without scram corresponds to a control rod withdrawal accident in a conventional reactor. Under normal operation, the reactor power is controlled by injecting either highly borated or fresh unborated water into the loop. In this transient, it is assumed that fresh water is continuously injected into the loop at a rate of 50 kg/s (=200% of the design maximum). Boron concentration in the loop decreases and the reactor power rises. After a 16% rise in reactor power, the water buoyancy in the riser overrides the pump controller and the borated pool water enters the loop at 500 s. The inflow of the pool water is periodical, following oscillations in the reactor power and in the riser temperature. The power oscillates with a period of 22 s about a main value of 107%. The excess power is deposited into the pool through the density locks (the heat sink in the steam generator is limited by a constant feedwater supply). The external inventory of fresh water will generally be exhausted before a dangerous rise in pool temperature can occur.

Unintentional Startup from a Cold Critical State

As previously mentioned, there are no control rods in the PIUS design; reactivity control is by coolant composition and temperature only. Cold startup is achieved by blocking off the primary coolant circuit from the pool by means of a gas bubble (the temperature-differential method normally used does not work because pool and primary circuit are nearly isothermal after a long shutdown, e.g., for refueling). Nitrogen gas or a nitrogen-hydrogen mixture is bubbled into an inverted-bowl volume above the

lower density lock so that the pipes emerging from the latter have their upper end in the gas bubble. The main coolant pumps are started and run at the lowest speed permitted by the hydrodynamic bearings (~ 20%). This will cause a level difference across the two sides of the above pipe endings. Dilution of the boric acid in the primary system can now start by adding fresh water and removing an equal flow of coolant. When approaching criticality, the rate of dilution is normally decreased and criticality is passed in a controlled way with surveillance of neutron flux and manual control of the freshwater flow and constant coolant pump speed. Once the reactor has gone to power, and the primary coolant is heated to a certain level, the gas bubble can be removed. (Failure to do so has no consequences safetywise).

At cold startup the moderator temperature coefficient of reactivity is completely different from that at operating temperature, being initially slightly positive. In the "cold startup accident", it is assumed that boron dilution is carried out with maximum fresh water injection rate (25 kg/s) through criticality, inspite of the positive coolant temperature reactivity coefficient, and that no surveillance at all of the core behavior is carried out. No heat extraction from the steam generator is assumed. The reactor

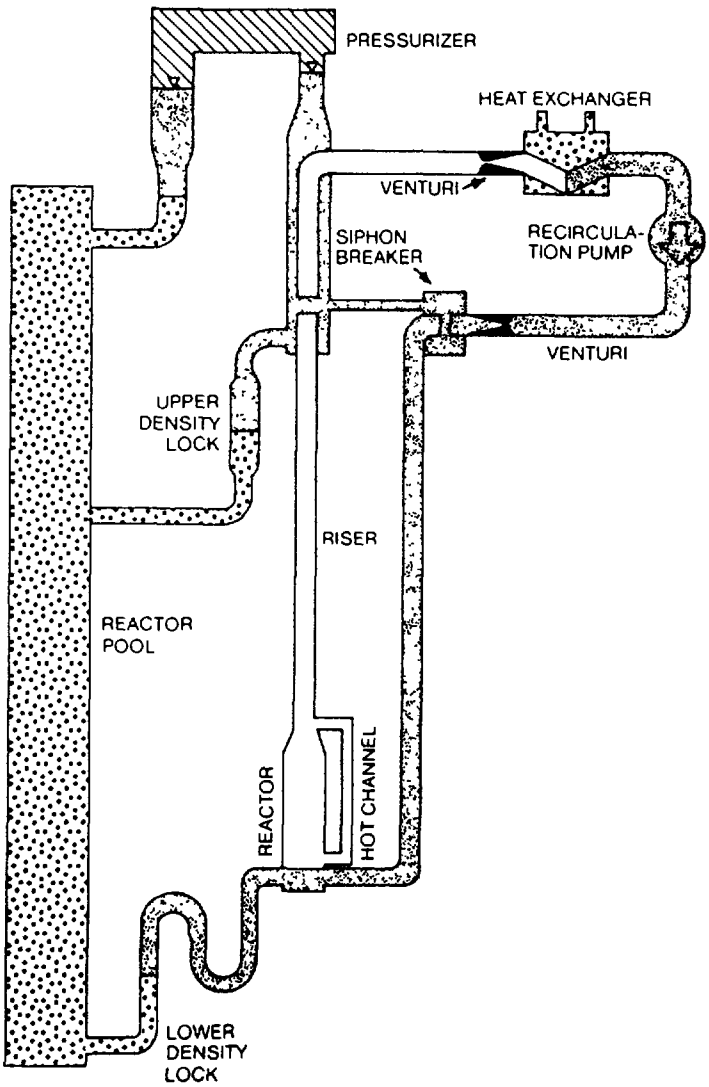

FIG.5.1.4. The ATLE test rig, schematically.

power rises with decreasing boron concentration until it is checked at app. 35% of full power by increasing fuel and coolant temperatures. The temperatures rise further and the power decreases. At 500 s the gas lock is broken and the ingress of pool water shuts the reactor down. Thus, even the most malicious handling of the reactivity control system in a cold reactor startup with boron dilution will not result in a dangerous situation.

There can be no serious doubts that the computer simulations of system behaviour are reasonably correct, but there is obviously a limit to the confidence that can be placed in them. In other words, some sort of physical demonstration is needed for credibility. To this end, ABB-ATOM has built a large test rig, named ATLE, for nonnuclear demonstration of system behaviour. The heart of this rig is a full scale electrically heated simulated fuel assembly of the SECURE-H reactor design (the heat-only generating version of SECURE operating at 2.0 MPa). This contains 60 thinwalled 12 mm diameter, 2 m long stainless steel tubes directly heated by up to 40 000 amperes DC

The ATLE rig represents a multi-million-dollar investment and is a highly complex and advanced facility. Fig.5.1.4 shows the principal arrangement (the rig simulates a plant design with the heat transfer circuit outside the concrete vessel). A large number of transients have been run with ATLE and the agreement between the measurements and the results from the RIGEL calculations have been very good. Thus, the predictive capability of RIGEL has been verified.

5.2 ISER REACTOR [91] (Japan)

The ISER developed under the leadership of the University of Tokyo, is a design based on the PIUS concept and follows the same inherent safety principle: passive reactor shutdown through ingress of borated pool water into the core via interface and passive decay heat removal by natural circulation. However, the important deviation from the PIUS is that the ISER employs a SRPV (steel-made reactor pressure vessel) enclosed in the reactor pit instead of the PCRPV (prestressed concrete reactor pressure vessel) of the PIUS. The benefits are, by employing the SRPV, it provides siting versatility, including a barge-mounted plant, lower costs, standardization and series production of the total NSSS through weight reduction and compaction of the primary system, as well as the widespread possibility of utilizing current LWR technology, which minimizes R&D efforts. The ISER characteristics are listed in Table 5.2.1.

5.2.1 The Primary System

The latest ISER concept is shown in Fig.5.2.1. The primary system with the reactor vessel consists of two parts, i.e. the primary coolant loop and the borated water pool, which are connected together via upper and lower interfaces. They are divided by the outside of core internals covered with thermal insulators. A 645 MWt reactor core is installed in the bottom of the core internals which are supported together with the steam generator bundles at the upper edge of the reactor vessel. The primary coolant from the core ascends in the riser, then enters into the main circulation pumps and flows through the steam generators to the core. The four primary coolant pumps are located at the upper part of the reactor vessel with their motors placed outside the vessel. A pressurizer integrated in the reactor vessel is located above the top of the riser to maintain the primary coolant in a subcooled condition and to absorb the volume change in a transient state. Two upper interfaces are located outside the pumps as shown in Fig.5.2.1 (VIEW A-A).

TABLE 5.2.1
ISER PLANT CHARACTERISTICS

Parameters	ISER
General	
Thermal power	645 MWt
Electrical power	210 MW
Thermal efficiency	32.5%
Core outlet temp.	323°C
Core inlet temp.	289°C
Pressure at core outlet	15.5 MPa
Core pressure drop (dynamic)	0.015 MPa
Mass flow	3254 kg/s
Pool water temp.	100°C
Secondary system	
Steam press. at S.G. outlet	5.7 MPa
Steam temp.	300°C
Steam flow	1280 t/h
Feed water temp.	226°C
Pressure vessel	
Material	Steel
Inside diameter	6 m
Height	26.4 m
Thickness	0.15 - 0.30 m
Outside diameter	7 m
Inside volume	600 m^3
Weight	1400 t

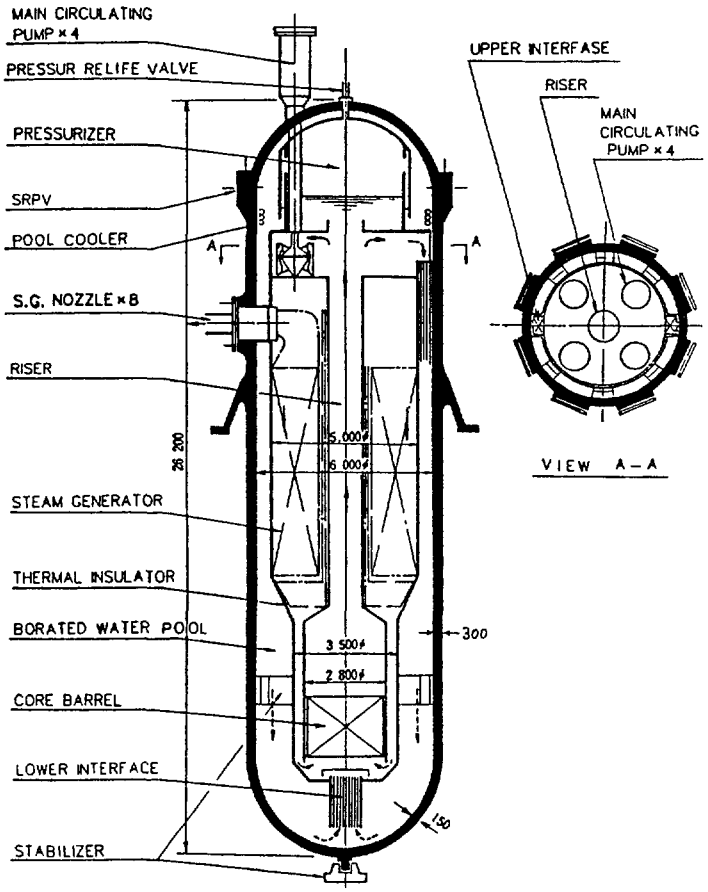

FIG.5.2.1. Concept of the ISER 645 MWt.

The ISER has the following characteristics:

1. Operational pressure and temperatures are the same as those of modern PWRs to improve the plant thermal efficiency.
2. By employing the reactor vessel, the pool watertemperature is raised from 50°C to 100°C.
3. The weight of the reactor vessel is approx. 1400 tons which can be fabricated in the existing factory and allows siting versatility.
4. The use of the reactor vessel makes it possible for a barge-mounted plant.

5.2.2 Operation

Reactor power is controlled using almost the same PIUS principles as follows:

1. Under normal conditions, including startup and shutdown: by adjusting the boron concentration in the primary coolant.
2. For load changes: by the caused moderator temperature coefficients. (by flow rate of the primary coolant.)
3. During abnormal conditions: by borated pool water entering through the interfaces into the primary coolant loop.

Decay heat removal is achieved by the following means:

1. During normal reactor shutdown: through the secondary system via the steam generator.
2. Under abnormal secondary system conditions: the amount of water above the core level - approx. 350 tons - becomes a heat sink, the heat is then dissipated through the pressure relief valves and the core is submerged for about two days.

   Employing the reactor vessel offers the potential of prolonging core submersion days by natural heat dissipation through the vessel wall and by additionally injecting the cooling water outside the vessel.

Core refuelling is conducted by:

1. Removing the reactor vessel top cover, consolidated together with the pressurizer structures and the main circulating pumps.
2. Fastening the refuelling basin above the vessel flange.
3. Exchanging the fuel by a remote-operated machine through the riser.

5.2.3 In-service Inspection

In-service inspection of the reactor vessel and steam generator tubes are conducted by accessing from the outside without opening the vessel. This profits in reduced working days and radiation exposure dose to personnel. The internals such as thermal insulator, riser, interfaces are removable to the outside of reactor vessel for inspection and repairing.

5.2.4 Design Features of the Key Components

5.2.4.1 <u>Thermal Insulation of Internal Structures</u>

The thermal insulation is extremely important in the ISER design to minimize transfer of heat from the primary coolant to the pool water, which

differs in temperature of approx. 200°C. A ceramic material like sintered zirconium oxide (ZrO_2) tile or brick was proposed for this thermal insulation.

In another deliberation, a double tube structure containing the insulator was discussed, including integration of internal structures such as the riser, steam generator, core barrel and interfaces.

5.2.4.2 Steam Generator

The ISER adopts the once-through helical coil-type steam generator similar to that used in the nuclear ship "Otto Hahn" reactor. Secondary water is fed inside the tubes and converted to superheated steam. Heated primary coolant is sent from the top of the steam generator, that is, the hot leg of the riser, by four main coolant pumps.

5.2.4.3 Pressurizer

By containing the entire pressurizer inside the reactor vessel to prevent primary coolant loss, the vessel pressurizer offers higher safety than in modern PWRs. At the same time, it also maintains basic design principles and control methods of modern PWR pressurizers.

The ISER pressurizer forces both the primary coolant and the pool water to reduce the amount of water level in transients, without preventing natural circulation of the primary coolant. The pressurizer comprises electric heaters, a dome, a top part of the riser, and a spray. Although at this stage, optimization of the ISER pressurizer has not been reached, it is expected to be possible to reduce its size by increasing the volume control functions of the primary coolant and pool water treatment systems, and by analysing transient phenomena of the primary system in detail.

5.2.4.4 Interface

Interface between the primary coolant and the pool water is one of the key and peculiar components of the ISER, because the inherent safety of the ISER rests on it. The design requirements of the interface are:

1. Mixing of the primary circuit water and boric water (entry of boric water into the primary circuit) when the pump flow is more or less than the hydraulically balanced core flow. The mixing should take place so as to decrease the core output and to cool down the core within the designed time lag.
2. Conversely, no mixing of the primary coolant water and the boric water (no entry of boric water into the primary circuit) when the main circulating pump flow is equal to the natural circulating core flow.
3. Automatic function without human action
4. No conceivable failure (i.e. reliability)

Since the interface is a new component not currently used by operating LWRs, these conceptual designs require further R&D for verification. For compromizing stable core output at normal operation, quick adjustment of the core output at the main circulating pump malfunctions, and cooling down of the core in an emergency, full mock-up tests of the interface may be required.

5.2.4.5 Water Treatment System

The water treatment system is one of the key systems of the ISER, because the system has a function of controlling the reactivity of the core and the operability of the ISER rests on it. Since the system has similar objectives and conditions as PWRs, specifications and treatment methods for chemical and volume control system (CVCS) of PWR primary coolant can be successfully applied to the ISER water treatment system. However, since the 210 MWe ISER has 240 m^3 of primary coolant and 300 m^3 of pool water, the water quantity per unit power is eight times more than that of PWRs, which means higher construction cost. The ISER water treatment system design can reduce its construction costs while it still maintains superior safety.

5.3 PIUS BWR AND PECOS-BWR [92,93] (USA)

5.3.1 PIUS BWR

A conceptual design of a 750 MWe PIUS BWR is shown in Figs 5.3.1.1 and 5.3.1.2. The conceptual design has been developed under the leadership of Oak Ridge National Laboratory. The reactor is located in a large prestressed concrete pressure vessel (PCRV), with an internal diameter of 13 m and an internal height of 35 m. The PCRV and its special internals replace the steel pressure vessel, emergency core cooling system (ECCS), diesel generators, spent fuel storage ponds, and containment structures of a conventional BWR. In addition to the reactor, the PCRV contains a volume of cool, borated water sufficient to cool the reactor core by boiling for a period of one week after shutdown without the addition of water from the outside. By placement of the reactor and all safety systems inside the PCRV, the critical safety systems are protected by a vessel with walls 7 m thick. All penetrations into the vessel are near the top to prevent water leakage out of the PCRV. This particular vessel design is that developed originally for the SECURE-P reactor (see Section 5.1). The 750 MWe rating is the reactor size that could use this size of PCRV. Also shown in Fig.5.3.1.1 for comparison is the cross section of an existing British advanced gas-cooled reactor (AGR) PCRV.

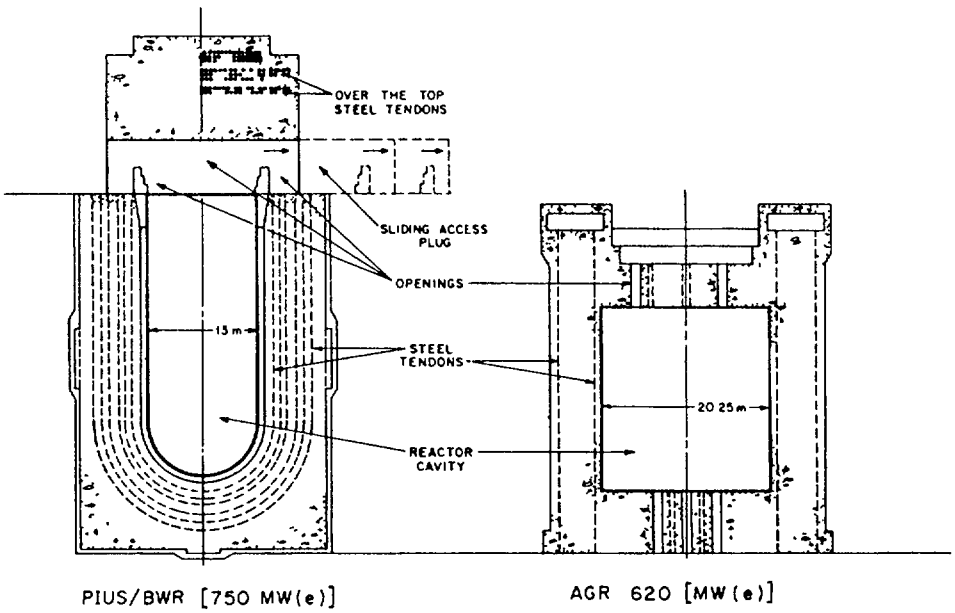

FIG.5.3.1.1. Process inherent ultimate safety boiling water reactor (PIUS/BWR) and British advanced gas cooled reactor (AGR) prestress concrete reactor vessel designs.

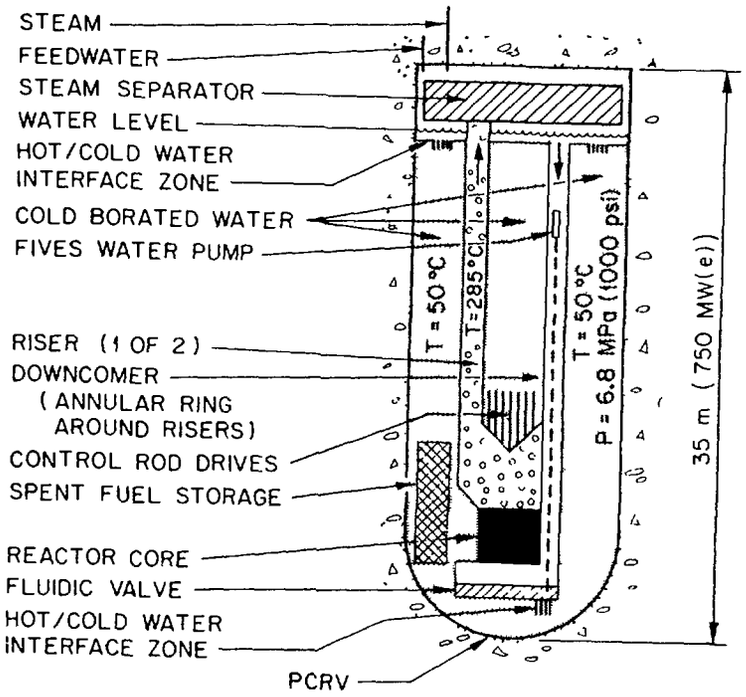

FIG.5 3 1.2 Schematic of process inherent ultimate safety boiling water reactor.

The PIUS BWR operating conditions (285oC, 6.9 MPa) are similar to current commercial BWR designs. For a 750 MWe reactor, the PCRV is sufficiently tall to allow operation of a natural recirculation BWR, thus eliminating BWR recirculation pumps and simplifying the reactor circuit. For smaller PIUS BWRs with smaller PCRVs, recirculation pumps would be required. Such pumps would be located in the downcomer, as are existing recirculation pumps for certain BWR designs.

A top entry control rod drive system would be used for the PIUS BWR. The PCRV has no bottom or side penetrations to minimize the possibility of a water leak; thus, the control rod drives must be in the PCRV in the cool, borated water zone. For a PIUS BWR, the conventional bottom entry BWR control rods have two undesirable features: lack of easy access below the reactor core for maintenance and space consumed by the control rod drives. If the control rod system is under the reactor core and raises the elevation of the core in the PCRV, a larger PCRV is required to provide the same quantities of water above the core elevation for emergency cooling. Top entry control rods have in the past been used in BWRs such as the Elk River power plant in the United States. They are currently being investigated by several reactor vendors for future BWRs.

To create a PIUS BWR with passive safety, two features are required:

1. A mechanism herein called the Fluidic In-Vessel Emergency Core Cooling System (FIVES) to ensure that cooling water is always available in the reactor core.
2. A mechanism herein called the Low Excess Reactivity Core (LERC) to limit reactor power levels to within the available cooling capacity.

FIVES

FIVES consists of three components (Figs 5.3.1.2 and 5.3.1.3).

1. Water pump in the downcomer;
2. Fluidic valve;
3. One week supply of emergency core cooling system (ECCS) water at reactor pressure.

The reactor vessel contains the reactor circuit and borated ECCS water in separate compartments at the same pressure. The hot reactor water and cool ECCS water are in contact with each other through a hot/cold water interface zone near the top of the PCRV. They are separated by a fluidic valve near the bottom of the PCRV. If the fluidic valve opens, the higher density borated water flows into the reactor core shutting it down and cooling it. The fluidic valve, containing no moving parts, separates the cool, borated (ECCS) water from the reactor coolant and maintains itself in a closed state if it receives a steady flow of high-pressure water from the FIVES water pump.

Protection against a low water level in the reactor vessel is provided by positioning the FIVES water pump high above the reactor core in the downcomer (Fig.5.3.1.2). If there is a loss of feedwater, the pump will go dry before the reactor core is uncovered; thus no water will be sent to the fluidic valve. This lack of water triggers the valves to open, flooding the reactor with cool, borated water. The volume of reactor water in the downcomer between the elevation of the water in the steam separator and the water pump is sized so that normal plant transients would not trip FIVES. FIVES would self-activate only when there was a major threat to core integrity-an event expected less than once per reactor lifetime. Recovery from FIVES activation would take several days for boron removal from the reactor water.

The central component of FIVES is the vortex fludic valve assembly (Fig.5.3.1.3), which is a modified vortex fluidic amplifier operated as a valve. This is similar to a conventional centrifugal pump with a blocked exit line. The incoming FIVES water is injected tangentially at high velocities into the vortex casing, causing the water to move in a circle.

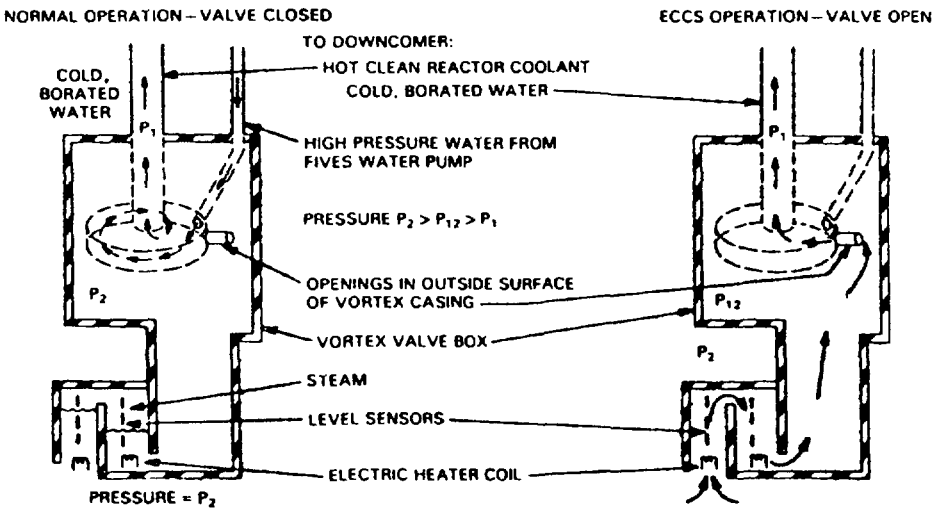

FIG.5.3.1.3. Vortex fluidic valve assembly.

The centrifugal forces create higher pressures near the outside surface of the vortex valve casing and lower pressures near the inside. The outside surface has holes (short lengths of tubing) that connect it to a zone of clean, higher pressure reactor water, which, in turn, is in contact with the borated water zone at the steam vapor lock. The center of the vortex casing is connected to the downcomer and exhausts FIVES water to the downcomer. By adjusting FIVES water-pump output, pressures across the vortex valve can be made to match the pressures of the two water zones. In effect, a failsafe valve exists that uses the dynamic forces of water rather than pieces of metal to prevent flow through the valve from the borated water zone to the reactor core during normal operation.

Below the fluidic valve is a steam vapor trap that separates borated water from reactor coolant. Electric heaters maintain steam in the vapor lock steam dome, and water level sensors determine water level interfaces. These sensors are used to control the speed of the FIVES water pump system during normal operation.

LECR

The PIUS BWR uses a low excess reactivity core with relatively low power densities to assure excessive power levels cannot occur.

5.3.2 PECOS-BWR

PECOS-BWR (Passive Emergency Cooling Systems for Boiling Water Reactor) is one of the variants between the PIUS-BWR and commercial BWR technology. The preconceptual design was developed by Oak Ridge National Laboratory. Except for the safety systems, the technology is that of current BWRs. The basic safety approach for PECOS-BWR is the same with that of the PIUS-BWR, but the emergency core cooling water supply provided is only for the first day after an accident.

By reducing the ECCS water supply stored in the pressure vessel from seven days to one day, a steel rather than concrete reactor vessel can be used. The PECOS-BWR assures passive core cooling beyond one day by using a passive air cooling system. The 1-day ECCS water supply in the pressure vessel provides core cooling until the reactor decay heat is sufficiently low for passive air cooling to become a viable option. The design here considers a power plant with a rated capacity of 750 MWe.

5.3.2.1 Basic Features

The PECOS-BWR (Fig.5.3.2.1) has three major interrelated systems: (a) a reactor primary system, (b) a passive emergency cooling system, and (c) a containment structure. These components are tightly coupled compared to systems in current-generation BWRs. This is a direct result of the ECCS design that includes storage of a 1-day supply of ECCS water inside the pressure vessel. The use of the reactor pressure vessel to contain the reactor core and ECCS water implies (a) a very large pressure vessel (36 m high) and (b) a pressure vessel with no penetrations in the bottom 90% of the pressure vessel, which is necessary to eliminate the possibility of pipe breaks and subsequent loss of the ECCS water.

5.3.2.2 Reactor Core and Control

The reactor core is similar to existing BWRs. Reactor power control would be achieved with the use of control rods and variations of recirculation flow pump speed. The primary difference compared to most

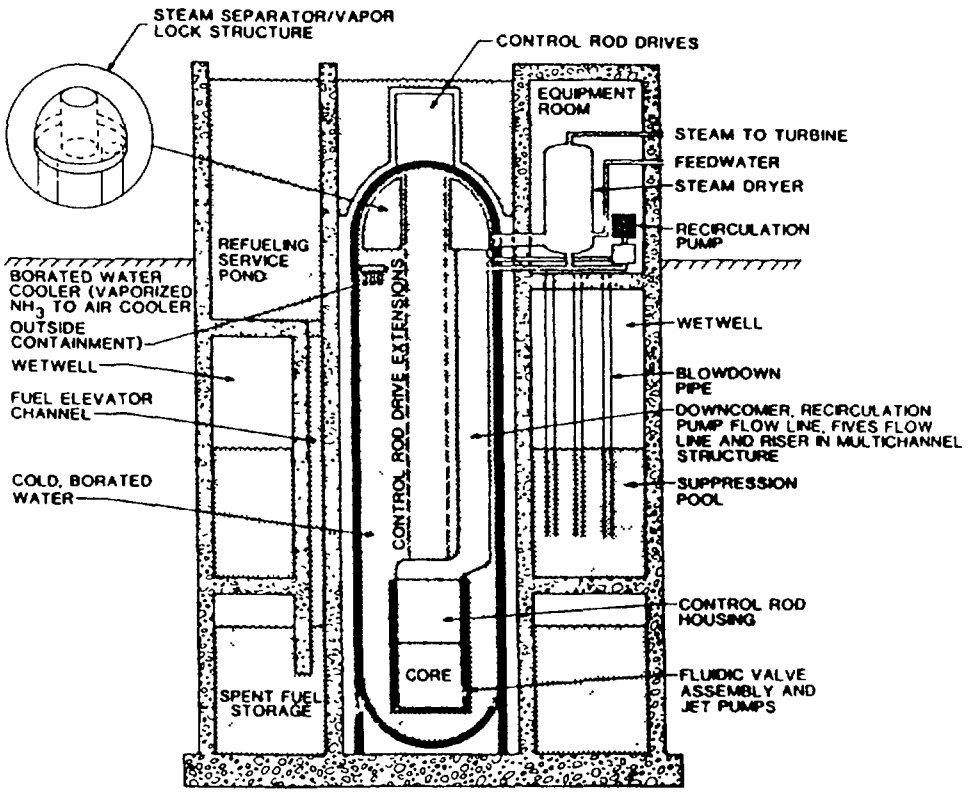

FIG.5.3.2.1. PECOS-BWR containment schematic.

commercial BWRs is the use of top entry rods. This is necessary to minimize maintenance difficulties, avoid penetrations in the bottom of the pressure vessel, and to place the reactor core low in the pressure vessel (See Section 5.3.1).

5.3.2.3 Primary System

The primary system layout (Fig.5.3.2.2) and many other design features are similar to current BWR design. In the PECOS-BWR, the steam-water mixture from the core flows up multiple risers in the main pressure vessel to steam separators. The steam exits the main pressure vessel and enters the steam dryer pressure vessels. Steam is then sent to the turbine. Water from the steam separators, dryers, and feedwater pumps is divided into two streams. One stream returns to the reactor core via downcomer and jet pump. The other stream goes through the recirculation pumps (not shown) and then to the jet pumps where its higher pressure boosts the pressure of all the recirculation water before it is sent back to the reactor core. The option exists to include steam dryers and other components inside the primary vessel but with less access for maintenance and refueling operations.

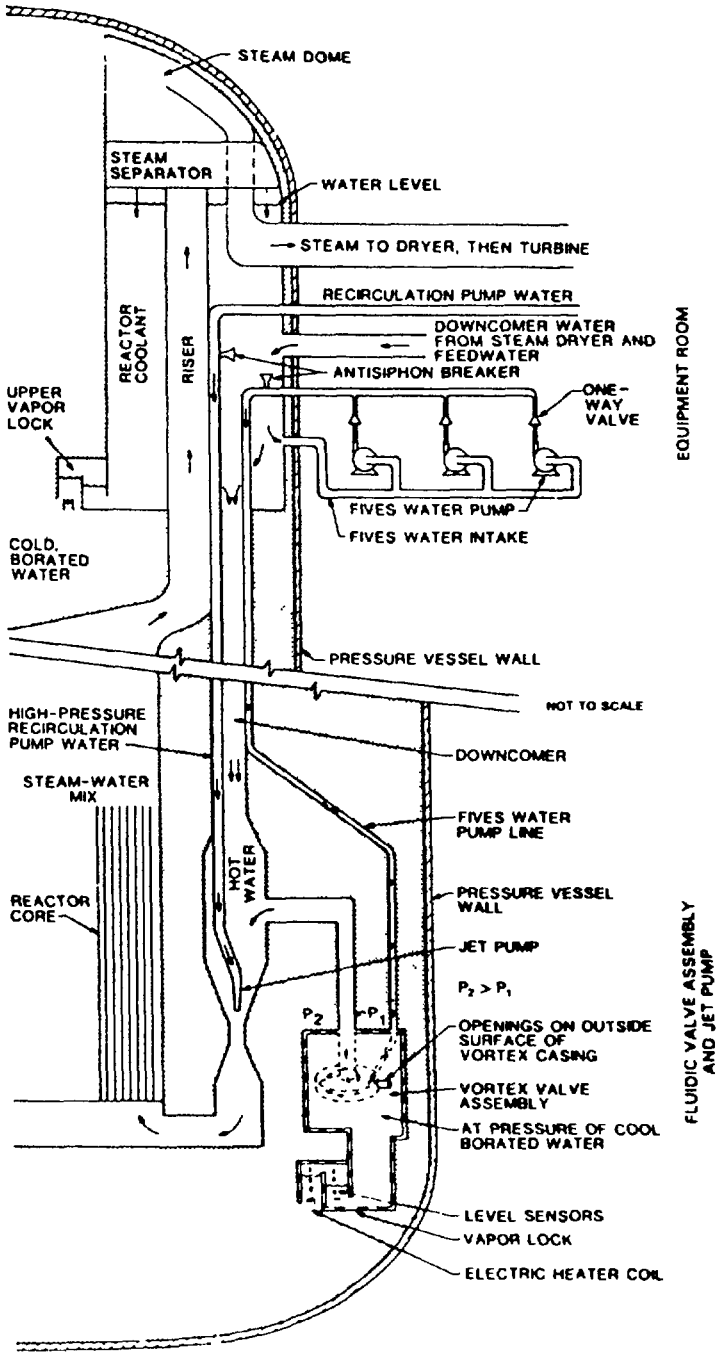

FIG.5.3.2.2. Schematic of fluid flow in reactor vessel.

5.3.2.4 Containment Design

A major feature of containment design is the location of the long-term spent fuel storage in an annular zone around the reactor vessel near the bottom of the containment structure. Locating the reactor core and stored spent fuel at low points in the containment has several advantages:

1. Passive safety is enhanced since any free water naturally drains toward the spent fuel and provides cooling.
2. Space is available for a 40-yr spent fuel storage capability. The potential for water flooding and the inaccessibility for maintenance makes space low in containment undesirable for locating heavy mechanical equipment or other uses.

3. Resistance to earthquakes is improved by removing the heavy fuel from near the top of the structure.
4. Safety is improved because the water in refueling ponds and other atmospheric pressure storage tanks may be used for emergency cooling by gravity-induced drainage into the reactor after reactor depressurization (see below) or into the spent fuel pond by the simple operation of valves.
5. The arrangement provides additional space near the top of the containment structure for equipment rooms, steam separators, and other components.

5.3.2.5 Emergency Core Cooling Systems

5.3.2.5.1 Design Criteria

The PECOS-BWR has three systems that function for ECCSs: (a) the fluidic in-vessel emergency core cooling system (FIVES), (b) the natural-draft, air-cooled heat removal system, and (c), as a secondary system, the refueling pond dump system. Each system has a different purpose and different design criteria. All the systems are passive and do not have the pumps or diesel generators of conventional ECCSs.

The FIVES design criteria include reactor shutdown and reactor core cooling for one day upon activation by low water level in the pressure vessel where all required safety components are (a) passive, (b) located in the pressure vessel below the lowest vessel penetration,and (c) cannot be shut off by operator actions. Passive safety implies that no moving parts (valves, motors, or pumps) or electronics are required for system activation. These criteria also require the location of the 1-day supply of ECCS borated water in the pressure vessel. The 1-day cooling period is specified to provide sufficient time to (a) mobilize all facility personnel for repairs, (b) allow decay of the most dangerous short-lived radioisotopes, and (c) reduce decay heat levels to less than 1% of full-power levels so that other ECCSs can passively handle the decay heat load.

The design criteria for the natural-draft, air-cooled heat removal system provide for reliable cooling of borated FIVES water in the pressure vessel during normal operations and passive long-term core cooling within 12 to 24 h after activation of the FIVES. This system has limited heat removal rate capabilities; hence it depends on FIVES to cool the core when decay heat levels are high immediately after reactor shutdown. The air coolers and FIVES are complementary. While the air coolers have limited heat removal rates but can operate indefinitely, FIVES has a very high heat removal rate, although the total heat removal is limited by the water inventory.

The refueling-pond dump system design criteria provide for a multiday supply of ECCS water delivered to the reactor core. The criteria allow for use of valves and instruments in this safety system but no high-energy-consuming equipment such as pumps. This system provides protection against extreme events such as common mode failures or major pressure vessel leakage.

5.3.2.5.2 Fludic In-Vessel ECCS

The PECOS-BWR has a Fluidic In-Vessel Emergency Core Cooling System similar to the PIUS-BWR (see Section 5.2.1). The primary difference is that with the PECOS-BWR, only a 1-day supply of cool, borated emergency core cooling water (approximately 1.0 m^3/MWe) is in the reactor vessel zone.

5.3.2.5.3 Natural-Draft, Air-Cooled Heat Removal System

This system is designed to maintain borated ECCS water temperatures in the primary pressure vessel at 60°C during normal operations and to assure long-term passive core cooling in most emergency situations. The cooling system chosen for the borated ECCS water is a two-phase heat transfer loop where (a) ammonia vaporizes inside the borated water coolers in the primary pressure vessel, (b) vapor is transferred to the air coolers, (c) the vapor is condensed rejecting heat to the atmosphere, and (d) the liquid ammonia is returned to the borated water coolers. This system is designed as a natural-circulation loop, a common practice with such systems. The air coolers are conventonal chemical industry air coolers with a natural-draft-assisted fan cooling system. System parameters are summarized in Table 5.3.2.1.

TABLE 5.3.2.1
AIR COOLING SYSTEM PARAMETERS

System Parameters	Normal Operation[a]	Emergency Cooling[b]
Operational mode	Fan augmented natural draft	Natural draft
Air condenser total area (m^2 (ft^2))	500 (5400)	500 (5400)
Heat load (MWt)	22.5	41.4[c]
Temperature (°C)		
Borated water	60	100
Heat transfer fluit	55	95
Ambient air	40	40
Exit air from condenser[d]	51.19	88.06
Heat transfer fluit	NH_3	NH_3
Cooling tower height above coils (m)	25	25
Cooling manufacturer	Höterv	Höterv
Design	Plate fin	Plate fin
Air cooler thickness (cm)	15	15
Tube rows in direction of flow	6	6
Air flow rate ($kg/m^2.h$)	14 426	6151
Air velocity [c](m/s)	3.47	1.48
Heat rejection (kW/m^2)	45.0	82.8

a Normal borated water cooling system performance assuming 1% of thermal power rejected through vessel cooling system.

b Reactor depressurized to atmospheric, cooling system with no power.

c Power level matches decay heat power level 35 min after shutdown.

d Based on air side heat transfer coefficient; heat transfer resistance of wall and condensing liquids assumed insignificant.

e Measurements with respect to frontal area of air cooler. Air coolers mounted in tent fashion where cooler frontal area is at angle of 60° to the horizon.

One characteristic of natural-draft-assisted, air-cooled systems is that their heat removal capabilities are a very strong function of heat rejection temperatures. If there is a total loss of station power, the reactor depressurizes and the borated water temperature increases from 60 to 100°C. With cooling fans off, this system's heat removal capabilities exceed reactor decay heat within 35 min of shutdown. If the reactor does not depressurize and cooling fan power is not lost, this system's heat rejection rate exceeds decay heat rejection rates within a few minutes. Small air coolers have very high heat rejection capabilities as operating temperatures increase.

Recent work on advanced PWRs has included consideration of air coolers to condense steam generator steam during station blackout-type accidents and thus provides long-term core cooling; however, these systems require mechanical valves and instruments for activation. The use of the two-phase heat transfer loop with FIVES eliminates many of these problems for BWRs. The FIVES mechanism allows the cooling coils to be in a zone of cold water in the reactor pressure vessel during normal operations but exposes the cooling coils to higher water or steam temperatures in an accident situation. This basic mechanism of isolating the cooling coils from hot reactor water during normal operations could be applied to any LWR whether or not borated water was used or large volumes of emergency cooling water were stored in the primary pressure vessel.

5.3.2.5.4 Refueling Pond Dump System

The refueling pond dump system consists of (a) valve mechanisms to open the pressure relief valves and depressurize the reactor and (b) valves to drain refueling pond water into the reactor vessel. Because the refueling pond is used only during refueling operations and not for long-term spent fuel storage, the water is available for cooling. In most emergencies, this system would not be activated due to the capabilities of FIVES and the air coolers.

5.3.2.6 Pressure Vessel

The PECOS-BWR concept requires a very large steel pressure vessel similar in size to that required for ISER (see section 5.2). For a 750 Mwe reactor, the reactor vessel characteristics are: inner diameter 8.3 m; height 36 m; wall thickness 0.19 m; and operating pressure 7.0 Mpa.

5.3.2.7 Options

There are two major design options for the PECOS-BWR that may offer major cost and/or safety advantages but would require significant additional research.

1. The high pressure vessel height allows the option of a natural circulation BWR with fewer mechanical components. With this option, the jet pumps would be replaced with large fluidic valves to control power levels by varying total core water flow rates. The recirculation pumps would be replaced with smaller downcomer flow control pumps that would provide water to control flow through the fluidic valves. Fluidic valves can be designed to assure minimum flow regardless of control pump water flow. The FIVES with its fluidic valves would remain unchanged. With a natural circulation reactor, core power density would decrease and downcomer size would increase to minimize system pressure drops. There are many options

on the choice of fluidic valves for this appplication since absolute flow cutoff is neither required nor desired.

2. With the pressure vessel compartment flooded, the spent fuel storage, spent fuel handling, and suppression pools can be combined. In effect, the entire primary system and major safety auxiliaries can be placed underwater in a large atmospheric pressure pool. The advantages of this concept include potentially lower costs, protection against catastrophic pressure vessel failure, and additional ECCS heat removal capabilities. The large pressure vessel may allow more than half the decay heat to be conducted through the vessel wall to cold pool water. This option only exists for reactors where the pressure vessel will normally operate in a cold condition (40 to 90°C). Current LWRs have hot pressure vessels that would cause boiling on the pressure vessel surface if the pressure vessel exterior was flooded.

5.3.2.8 Economics

It is too early to provide reliable cost estimates for PECOS-BWR concepts; however, preliminary evaluations indicate the potential for cost reductions compared to the costs for building existing reactors. Although the PECOS-BWR requires a large pressure vessel, it eliminates most of the mechanical and electrical components of the ECCSs and the emergency diesel generators. This radically reduces the number of safety-grade electrical and mechanical systems. Less quantifiable but perhaps more important, passive safety systems should simplify licensing, improve public acceptance and allow plant operators to focus on operations rather than safety.

Annex I

SUMMARY TABLES FOR ALWRs

1.	Reactor:	The N4 Model
2.	Country:	France
3.	Reactor Supplier:	Framatome
4.	Type:	PWR, 4 loops
5.	Power:	1400 MWe
6.	Core:	205 advanced fuel assemblies (AFA) instead of 193 AFA in a 1300 MWe plant (P4 series), fuel burnup increased up to 50 000 MWd/t from 36 000 MWd/t.
7.	Reactor Coolant System:	reactor pump efficiency increased by 2%
8.	Steam Generator:	triangular pitch tube bundle with increased heat exchange surface to 7300 M^2 instead of 6900 M^2 for P4, steam pressure increased from 72 to 73.3 bar.
9.	Safety System:	improvement of redundancy on the main components of the SG auxiliary feedwater supply systems and of the components cooling systems.
10.	Power Generation System:	new ARABELLE turbine increased efficiency by 1%, impulse type instead of reaction type (P4).
11.	Fuel Cycle Length:	
12.	Commercial Status:	commercial operation 1991
13.	Remarks:	

x x x

1.	Reactor:	Convertible Spectral Shift Reactor (RCVS)
2.	Country:	France
3.	Reactor Supplier:	Framatome
4.	Type:	PWR, high conversion
5.	Power:	900-1400 MWe
6.	Core:	spectral shift control with movable fertile depleted uranium rods, moderator-to-fuel volume ratio 1.1 for MOX core 1.65 for uranium core, standard French PWR fuel rod o.d.=9.5 mm, hexagonal lattice.
7.	Reactor Coolant System:	
8.	Steam Generator:	
9.	Safety System:	
10.	Power Generation System:	
11.	Fuel Cycle Length:	
12.	Commercial Status:	commercial offering near terms
13.	Remarks:	

x x x

1.	Reactor:	Convoy
2.	Country:	Federal Republic of Germany
3.	Reactor Supplier:	Siemens/KWU
4.	Type:	PWR, 4 loops
5.	Power:	about 1369 MWe, 3765 MWt,
6.	Core:	193 assemblies with 18 x 18 array, 300 rods per assembly, fuel rod o.d. 9.5 mm, 61 control rods.
7.	Reactor Coolant System:	Spec. rod power 164 W/cm, pressure 158 bar, coolant temperature at RPV inlet/outlet 291.3/326,1^{o}C, single-stage centrifugal coolant pump
8.	Steam Generator:	Incoloy 800 tubes, 20 MnMoNi55 shell and tube sheet.
9.	Safety system:	4 train redundancy of the reactor protection system, emergency and RHR systems, and emergency feedwater system; controlled pressure relief facility for the containment, coupled to a portable filter unit for core melt accident
10.	Power Generation System:	One single turbine generator set
11.	Fuel Cycle Length:	Flexible cycle length, up to 18 months.
12.	Commercial Status:	One is commercially operating, second will be handed over in summer 1988, the third is under construction

13. Remarks:

x x x

1.	Reactor:	Advanced PWR (Siemens)
2.	Country:	Federal Republic of Germany
3.	Reactor Supplier:	Siemens
4.	Type:	PWR, 3 loops
5.	Power:	990 MWe, 3086 MWt
6.	Core:	18 x 18 fuel rod array assembly, 177 fuel assemblies,
7.	Reactor Coolant System:	reactor vessel inner diameter 487.8 cm, wall thickness 24.5 cm, pressurizer inner diameter 220 cm, height 1380 cm, volume 45 M^3
8.	Steam Generator:	incaloy 800 tubes
9.	Safety System:	3 trains connected to each loop without interconnections
10.	Power Generation System:	
11.	Fuel Cycle Length:	18 months
12.	Commercial Status:	ready for offering
13:	Remarks:	

x x x

1.	Reactor:	High Converter Reactor (HCR)
2.	Country:	Federal Republic of Germany
3.	Reactor Supplier:	Siemens
4.	Type:	PWR, high conversion
5.	Power:	up to 1500 MW
6.	Core:	super-tight hexagonal lattice high fissile material recovery rate, high burnup (total burnup ~ 70 000 MWd/t) high potential for flexible adaptation in current PWRs, fully compatible with advanced fuel management (Gd_2O_3 burnable poison, low leakage, axial blanket)
7.	Reactor Coolant System:	Siemens-Standard
8.	Steam Generator:	Siemens-Standard
9.	Safety System:	Siemens-Standard
10.	Power Generation System:	Siemens-Standard
11.	Fuel Cycle Length:	12-24 months
12.	Commercial Status:	licensability 1990
13.	Remarks:	-

x x x

1.	Reactor:	BWR 90
2.	Country:	Sweden
3.	Reactor Supplier:	ABB-ATOM
4.	Type:	BWR, 4 loops
5.	Power:	3000 MWt, 1050 MWe net (typical), plant efficiency 35%
6.	Core:	Fuel weight 120 000 kgU, average power density 25 kW/kgU, fuel burnup 45 000 MWd/tU, electric-hydraulic fine motion control rod drives
7.	Reactor coolant systems:	8 internal recirculation pumps
8.	Steam generator:	None
9.	Safety systems:	4 completely separated subdivisions (ECCS, power supply, control equipment)
10.	Power generation system:	turbine generator with MS/SRH, deaerator, and feed forward pumping of condensate
11.	Fuel cycle length:	12-24 months
12.	Commercial status:	available for commercial offers, construction period 54-60 months.

x x x

1.	Reactor:	VVER-1000
2.	Country:	USSR
3.	Reactor supplier:	Atomenergoexport
4.	Type:	PWR, 4 loops
5.	Power:	1000 MWe, 3000 MWt
6.	Core:	163 hexagonal fuel assemblies with 312 fuel elements each, 12.75 mm fuel element pitch, 9.1 mm fuel element diameter. 40 MWd/kg average fuel burnup 4.4% enrichment
7.	Reactor Coolant System:	primary pressure 157 kg/cm^2, reactor temperature outlet/inlet 320/290°C, 432 W/cm maximum linear heat generation rate, 1.73 minimum DNBR
8.	Steam Generator:	horizontal single-shell, steam pressure 62.7 kg/cm^2 at steam generator outlet
9.	Safety System:	4 independent hydraulic accumulators, actuation pressure 60 kg/cm^2
10:	Power Generation System:	
11:	Fuel Cycle Length:	7000 h operating time between refuelings
12.	Commercial Status:	in operation
13:	Remarks:	

x x x

1.	Reactor:	VVER 1800
2.	Country:	USSR
3.	Reactor supplier:	Atomenergoexport
4.	Type:	PWR, 4 loops
5.	Power:	1800 MWe, 5250-5800 MWt
6.	Core:	In comparison with VVER-1800: more control elements, optimal reactivity coefficients, reduction of power peak, Zr allow spacer in fuel assembly
7.	Reactor coolant sytem:	70 years life time of reactor pressure vessel. Increase in the distance from the inlet nozzles in RPV to the core.
8.	Steam generator:	Headers of steam generator immersed below the water level. Use of "vented" spacer boards for heat-exchange tubes
9.	Safety sytem:	Higher reliability of safety injection system. Passive decay-heat removal.
10.	Power generation system:	
11.	Fuel cycle length:	
12.	Commercial status:	Under design
13.	Remarks:	

x x x

1.	Reactor:	System-80
2.	Country:	The United States
3.	Reactor Supplier:	Combustion Engineering
4.	Type:	PWR
5.	Power:	3817 MWt
6.	Core:	16 x 16 fuel rod array assembly, 241 fuel assemblies, power density 95.9 kW/L
7.	Reactor Coolant System:	larger pressurizer, full load rejection does not require actuating pressure relief valves
8.	Steam Generator:	2
9.	Safety System:	two fully redundant injection trains
10.	Power Generation System:	
11.	Fuel Cycle Length:	18-24 months
12.	Commercial Status:	commercial offering ready
13.	Remarks:	approved by the NRC as a standardized design, three units licensed and operating at Palo Verde nuclear generating station, Arizona, USA, and two units (2825 MWt) under construction at Young Kwang, Republic of Korea

x x x

1.	Reactor:	System-80 Plus (80+)
2.	Country:	The United States
3.	Reactor supplier:	Combustion Engineering
4.	Type:	PWR
5.	Power:	3817 MWt
6.	Core:	Increased overpower margin, reactivity control without soluble boron, advanced burnable poison, control rods with longer life
7.	Reactor coolant system:	Ring-forged reactor vessel, reduced hot leg temperature, larger pressurizer
8.	Steam generator:	Increased SG tube plugging margin, increased secondary inventory, improved access for SG maintenance
9.	Safety sytem:	4 train safety injection, direct vessel injection, in-containment refueling water storage tank, 4 train emergency feedwater system, safety depressurization system, higher pressure shutdown cooling system
10.	Power generation system:	
11.	Fuel cycle length:	18-24 months
12.	Commercial status:	Commercial offering ready
13.	Remarks:	2825 MWt version under development

x x x

1.	Reactor:	Advanced PWR (M-W)
2.	Country:	United States/Japan
3.	Reactor Supplier:	Mitsubishi-Westinghouse
4.	Type:	PWR, 4 loops
5.	Power:	1350 MWe, Plant efficiency 35%
6.	Core:	19 x 19 fuel rod array assembly, total of 193 fuel assemblies, spectral shift control with zircaloy water displacer rods.
7.	Reactor Coolant System:	the height of Reactor Vessel increased by 3 m, larger pressurizer, full load rejection without actuating relief valves.
8.	Steam Generator:	structural broach and mud drum concept 3/4 inch small-sized tubes; TT-690 alloy tube
9.	Safety System:	passive low head injection with reflood tank, emergency water storage tank inside the containment
10.	Power Generation System:	turbine generator with 52 inch (132 cm) last stage blades,
11.	Fuel Cycle Length:	18-24 months, refueling/maintenance outage reduced from 75 to 45 days,
12.	Commercial status:	commercial operation mid-1990s
13.	Remarks:	

x x x

1.	Reactor:	Advanced BWR (H-T-G)
2.	Country:	United States/Japan
3.	Reactor Supplier:	Hitachi-Toshiba-GE
4.	Type:	BWR
5.	Power:	1356 MWe
6.	Core:	average power density 50.6 kW/L, fuel burnup 38 000 MWd/t, electric hydraulic fine motion control rod drives
7.	Reactor Coolant System:	internal recirculation pumps
8.	Steam Generator:	none
9.	Safety System:	3 completely separate ECCS divisions
10.	Power Generation System:	turbine generator with 52 inch (132 cm) last stage bucket
11.	Fuel Cycle Length:	18-24 months
12.	Commercial Status:	commercial operation 1996, construction period 48 months
13.	Remarks:	

x x x

1.	Reactor:	Sizewell-B
2.	Country:	United States/The United Kingdom
3.	Reactor Supplier:	Westinghouse
4.	Type:	PWR, 4 loops
5.	Power:	1250 MWe, (4200 MWt)
6.	Core:	
7.	Reactor Coolant System:	
8.	Steam Generator:	
9.	Safety System:	four high-pressure safety injection (HPSI), four accumulators for core cooling at the 40 bar range, four low-pressure pump to recirculate water for core cooling, four diesel generators instead of two for emergency power, an emergency boration system, an extra diesel-driven emergency charging pump for reactor pump seal leakage, an additional isolation valve between the high- and low-pressure cooling system, a secondary containment vessel.
10.	Power Generation System:	
11.	Fuel Cycle Length:	
12.	Commercial Status:	construction start at the end of 1987
13.	Remarks:	

x x x

1.	Reactor:	PWR-W-312
2.	Country:	Italy
3.	Reactor Supplier:	ENEL
4.	Type:	PWR, 3 loops
5.	Power:	2775 MWt, 985 MWe (gross)
6.	Core:	157 fuel assemblies, 264 rods per assembly, fuel rod o.d. 9.5 mm, 48 control rods clusters
7.	Reactor Coolant System:	average specific linear power 178.5 W/cm, inlet coolant temperature 291.7°C, mean temperature difference in the core 36.9°C. Operating pressure of primary circuit 15.51 MPa.
8.	Steam Generator:	Inconel tube, heat transfer surface 5144 m^2
9.	Safety System:	a filtered vented containment system, deeper reactor cavity housing a device capable of retaining and cooling down the corium
10.	Power Generation System:	one tubine generator set
11.	Fuel Cycle Length:	
12.	Commercial Status:	commercial offering ready
13.	Remarks:	

x x x

1.	Reactor:	B-600
2.	Country:	The United States
3.	Reactor Supplier:	Babcock & Wilcox
4.	Type:	Advanced PWR
5.	Power:	600 MWe
6.	Core:	
7.	Reactor Coolant System:	high inertia glandless reactor coolant pumps required no shaft seals or seal injection system
8.	Steam Generator:	
9.	Safety System:	four core flood tanks (two high pressure and two intermediate pressure), a pumped reactor injection and recirculation system, a passive emergency decay heat removal system, two passive emergency feedwater storage tanks, a containment incorporating a gravel bed heat sink and natural circulation air cooling
10.	Power Generation System:	
11.	Fuel Cycle Length:	
12.	Commercial Status:	conceptual design
13.	Remarks:	

x x x

1.	Reactor:	MAP (Minimum Attention Plant)
2.	Country:	The United States
3.	Reactor Supplier:	Combustion Engineering
4.	Type:	PWR
5.	Power:	300 MWe, 900MWt
6.	Core:	19 x 19 rod array fuel assembly, 9 x 9 four fuel subarrays; 137 fuel assemblies cruciform control element assembly; intrinsic reactor control with strong intrinsic negative reactivity feedback by saturated core water density changes
7.	Reactor Coolant System:	self-regulating primary pressure, natural circulation indirect cycle; pressure vessel i.d. 398.8 cm, height 2057.4 cm
8.	Steam Generator:	multiple once-through modules located inside the pressure vessel, secondary coolant inside the tubes
9.	Safety System:	the MAP design eliminates the following most potentially serious accidents: LOCA (loss of coolant accident), LOFA (loss of flow accident), SLB (steam line break) and ATWS (anticipated transients without scram)
10.	Power Generation System:	
11.	Fuel Cycle Length:	24-36 months
12.	Commercial Status:	Conceptual Design
13.	Remarks:	Conceptual design of a 600 MWe version also developed

x x x

1.	Reactor:	SBWR (Simplified/safe BWR)
2.	Country:	The United States
3.	Reactor Supplier:	General Electric
4.	Type:	BWR
5.	Power:	600 MWe
6.	Core:	power density 36 kW/L, the minimum critical power ratio (MCPR) margin increased from 10% to 35%
7.	Reactor Coolant System:	natural circulation; elimination of the recirculation loops, pumps and controls needed for forced circulation; and isolation condenser.
8.	Steam Generator:	none
9.	Safety System:	gravity driven core cooling system; passive containment cooling system; passive natural circulation air system provides habitability control for control room operators; and elimination of safety-grade diesel generators.
10.	Power Generation Sytem:	tandem double flow turbine with 52 inch (132 cm) last stage buckets, variable speed motor-driven feedwater pumps
11.	Fuel Cycle Length:	18 months to 3 years
12.	Commercial Status:	commercial offering mid-1990s
13.	Remarks:	Test programme begun in 1986 and scheduled for completion by 1989. Engineering studies supported by international cooperative programmes.

x x x

1.	Reactor:	AP-600 (Advanced Passive 600 MWe)
2.	Country:	The United States
3.	Reactor Supplier:	Westinghouse
4.	Type:	PWR, 4 cold legs, 2 hot legs
5.	Power:	1812 MWt, 630 MWe (gross)
6.	Core:	17 x 17 array fuel assembly, 145 assemblies, power density 73.9 kW/L, linear heat rating 12.6 kW/m.
7.	Reactor Coolant System:	canned rotor reactor coolant pumps, long radius weld free cold leg piping, normal flow rate 98 000 gpm/loop, reactor vessel i.d. 398.8 cm.
8.	Steam Generator:	2 "F" model tube bundle
9.	Safety System:	passive safety system: two accumulators, two full pressure core makeup tanks (CMT), a passive residual heat removal heat exchanger (PRHR HX), automatic RCS depressurization valves, an in-containment refueling water storage tank (IRWST), an air and water cooled steel containment vessel.
10.	Power Generation System:	4-flow, 44 inch (112 cm) turbine generator
11.	Fuel Cycle Length:	18 months (3-region core)
12.	Commercial Status:	commercial offering mid-1990s
13.	Remarks:	

x x x

1.	Reactor:	NUPACK
2.	Country:	The United States
3.	Reactor Supplier:	Westinghouse
4.	Type:	PWR, 2 loops
5.	Power:	600 MWe
6.	Core:	Standard
7.	Reactor Coolant System:	
8.	Steam Generator:	
9.	Safety System:	
10.	Power Generation System:	
11.	Fuel Cycle Length:	
12.	Commercial Status:	conceptual design 4 years schedule for construction and startup
13.	Remarks:	factory (shipyard) - built reactor plant module, conventional site-constructed balance of plant (BOP)

x x x

1.	Reactor:	SECURE-P
2.	Country:	Sweden
3.	Reactor Supplier:	ABB-ATOM
4.	Type:	prestressed concrete reactor pressure vessel (PCRPV) pool water reactor
5.	Power:	640 MWe, 2000 MWt (possibly modular design 300 MWe, 1000 MWt module. 2 modules, 600 MWe feeding a single turbine)
6.	Core:	213 18 x 18 PWR type fuel assemblies with open lattice, fuel rod o.d. 0.95 cm, power density 72.3 kW/L
7.	Reactor Coolant System:	primary system pressure 9.0 MPa, wet motor reactor coolant pumps at the lower end of steam generator, thermal insulation between the primary coolant circuit and the pool water
8.	Steam Generator:	once through type, secondary coolant outside the tubes (in modular design inside)
9.	Safety System:	self-protective properties, safety function based on the laws of thermohydraulics and gravity, density locks, at least one week "walk away period".
10.	Power Generation Syytem:	turbine generator with MS/SRH, deaerator, and feed forward pumping of condensate
11.	Fuel Cycle Length:	12 months reference cycle
12.	Commercial Status:	conceptual design, prototype reactor is needed
13.	Remarks:	PCRPV o.d. 29 x 29 m, height 45 m, cavity i.d. 13.4 m, cavity depth 34.5 m (for a 2000 MWt reactor)

x x x

1.	Reactor:	ISER (Intrinsically Safe and Economical Reactors)
2.	Country:	Japan
3.	Reactor Supplier:	
4.	Type:	Steel-made reactor pressure vessel (SRPV)
5.	Power:	210 MWe, 645 MWt
6.	Core:	lower power density
7.	Reactor Coolant Systems:	4 primary coolant pumps with their motors outside the SRPV, thermal insulation between the primary coolant and the pool water
8.	Steam Generator:	once-through helical coil-type, secondary water inside the tubes
9.	Safety System:	interface between the primary coolant and the pool water, two days "walk-away period"
10.	Power Generation System:	
11.	Fuel Cycle Length:	
12.	Commercial Status:	conceptual design, prototype reactor may be needed.
13.	Remarks:	SRPV i.d. 6 m, o.d. 7 m, height 26.4 m

x x x

1.	Reactor:	PIUS (Process Inherent Ultimate Safe) BWR
2.	Country:	The United States
3.	Reactor Supplier:	Oak Ridge National Laboratory
4.	Type:	BWR
5.	Power:	750 MWe
6.	Core:	top entry control rod drive system
7.	Reactor Coolant System:	similar to current BWR
8.	Steam Generator:	none
9.	Safety System:	fluidic in-vessel emergency core cooling system (FIVES), low excess reactivity core (LERC)
10.	Power Generation System:	conventional BWR
11.	Fuel Cycle Length:	conventional BWR
12.	Commercial Status:	conceptual design, prototype reactor maybe needed
13.	Remarks:	

x x x

Annex II

SUMMARY TABLES FOR LOW TEMPERATURE HEAT REACTORS

1.	Reactor:	SLOWPOKE Energy System (SES-10)
2.	Country:	Canada
3.	Reactor Supplier:	Atomic Energy of Canada Limited
4.	Type:	water pool reactor
5.	Power:	10 MWt
6.	Core:	32 fuel assemblies, power density 20 kW/L, 1200 kg of 2.4% enriched uranium dioxide fuel, beryllium reflector
7.	Reactor coolant circuit:	pool water natural circulation at atmospheric pressure, core temperature outlet 95°C, inlet 75°C
8.	Intermediate circuit:	temperature delivery 90°C, return 70°C
9.	Heating system circuit:	temperature delivery 85°C, return 65°C
10.	Safety:	large thermal capacity, ambient operating pressure, double containment of pool water, large negative reactivity coefficients, two independent shutdown systems
11.	Fuel Cycle Length:	5 calendar years
12.	Commercial status:	design based on experience gained from eight 20 kW SLOWPOKE-2 research reactors. A 2 MW demonstration reactor is operating and undergoing extensive testing. Collaborative programs are currently active with People's Republic of China and Hungary
13.	Remarks:	

x x x

1.	Reactor:	AST-500
2.	Country:	USSR
3.	Reactor Supplier:	
4.	Type:	LWR
5.	Power:	500 MWt
6.	Core:	121 hexagonal fuel assemblies, core height 3 m, diameter 2.8 m, power density about 30 kW/L, fuel enrichment 1.6% and 2%, average burnup about 15 000 MWd/t
7.	Reactor coolant circuit:	natural circulation, pressure 1.6 - 2.0 MPa, core temperature outlet 200-208°C, inlet 131-150°C, two regions of stable operation, with and without boiling
8.	Intermediate circuit:	heat exchanger sections built into the reactor vessel, pressure 1.2 MPa, temperature delivery 169-170°C return 90°C
9.	Heating system circuit:	pressure 2.0-2.6 MPa, temperature delivery 144-150°C, return 64-70°C
10.	Safety:	preventing leakage of the intermediate circuit water into the heat network both in the normal operation and in abnormal operating situations
11.	Fuel cycle length:	
12.	Commercial status:	two units are under construction in the two Soviet cities of Gorky and Voronezh
13.	Remarks:	

x x x

1.	Reactor:	AST-300
2.	Country:	USSR
3.	Reactor Supplier:	
4.	Type:	LWR
5.	Power:	300 MWt
6.	Core:	85 hexagonal fuel assemblies, power density 23 kW/L
7.	Reactor coolant circuit:	natural circulation, pressure 2.0 MPa, core temperature outlet 200°C, inlet 120°C
8.	Intermediate circuit:	pressure 1.2 MPa, temperature delivery 130°C return 75°C
9.	Heating system circuit:	pressure 2.0 MPa, temperature delivery 120°C, return 60°C
10.	Safety:	the same as AST-500
11.	Fuel cycle length:	
12.	Commercial status:	ready to offer
13.	Remarks:	

x x x

1.	Reactor:	SECURE-H (Safe and Environmentally Clean Urban Reactor for Heating)
2.	Country:	Sweden
3.	Reactor Supplier:	ABB Atom
4.	Type:	Pool-water type, PIUS (Process Inherent Ultimate Safety)
5.	Power:	400 MWt (or 200 MWt)
6.	Core:	308 fuel assemblies, core height about 2 m, power density 41 kW/L, fuel enrichment 2.5%, average burnup about 29 000 MWd/t
7.	Reactor coolant circuit:	2 loops forced circulation, core temperature outlet 190°C, inlet 150°C, pressure 2.0 MPa
8.	Intermediate circuit:	pressure 2.5 MPa
9.	Heating system circuit:	pressure in the heat exchanger 0.8 MPa, temperature outlet 150°C, return 70°C
10.	Safety:	reactor shutdown and core cooling are guaranteed under all accident conditions by the laws of gravity and thermohydraulics alone
11.	Fuel cycle length:	1/4 core every 2 years
12.	Commercial status:	The SECURE-H reactor has been offered to Finland as a heat source for Helsinki
13.	Remarks:	

x x x

1.	Reactor:	THERMOS
2.	Country:	France
3.	Reactor Supplier:	
4.	Type:	PWR
5.	Power:	100 to 150 MWt
6.	Core:	32 fuel assemblies, power density 54 kW/L, fuel enrichment 3.7%, burnup 30000 MWd/t core height 1.2 m
7.	Reactor coolant circuit:	forced circulation, pressure 1.3 to 1.5 MPa, temperature outlet 144°C, inlet 125 - 130°C
8.	Intermediate circuit:	temperature delivery 127 - 130°C, return 91-96°C
9.	Heating system circuit:	temperature delivery 120-130°C, teturn 80°C, pressure 0.7-1.7 MPa
10.	Safety:	
11.	Fuel cycle length:	
12.	Commercial status:	ready to offer, with the experience gained from CAP (the Compact Advance Prototype) reactor (30 MWt, supplies 180°C superheated water)

x x x

1.	Reactor:	NHR-200
2.	Country:	Federal Republic of Germany
3.	Reactor Supplier:	Siemens
4.	Type:	BWR
5.	Power:	200 MWt
6.	Core:	180 BWR-type fuel elements, the control blades inserted from above into the core, the rod drives incorporated into the reactor vessel, all excess reactivity held in control rods and in burnable poison, core height 235 cm, power density 20kW/L, fuel enrichment 5%, average burnup 40 000 MWd/t
7.	Reactor coolant circuit:	natural circulation, coolant temperature outlet 198°C, inlet 160°C, pressure 1.5 MPa, pressure vessel diameter 4.8 m, height 10.0 m, 12 heat exchanger modules
8.	Intermediate circuit:	pressure inside the vessel 2.0 MPa, temperature outlet 165°C, inlet 100°C
9.	Heating system circuit:	temperature delivery 120°C, return 70°C, pressure depends on the specific grid
10.	Safety:	gravity-actuated control rods from above, heat sink always available independent of accident
11.	Fuel cycle length:	every 20 years
12.	Commercial status:	concept developed ready for bids
13.	Remarks:	

x x x

1.	Reactor:	NHR-5MWt
2.	Country:	China, People's Republic of
3.	Reactor Supplier:	
4.	Type:	Pool-water
5.	Power:	5 MWt
6.	Core:	number of fuel assembly A12, with 96 rods each, B4 with 25 rods each, fuel rod diameter 1.0 cm with Zr-4 cladding, 69 cm core height, 3% enrichment, 463 kg UO2 load, 13 cruciform control rods, ~ 27 kW/L average power density
7	Reactor coolant circuit:	natural circulation, pressure 15 kg/cm^2, core temperature outlet/inlet 198/186°C
8.	Intermediate circuit:	pressure 17 kg/cm^2, temperature 150/110°C
9.	Heating system circuit:	temperature 120/60°C
10.	Safety:	All main parts of the primary loop are contained in the pressure vessel. A containment outside the reactor pressure vessel. Natural circulation of the residual heat removal.
11.	Fuel cycle length:	
12.	Commercial status:	Prototype reactor, under construction
13.	Remarks:	

x x x

1.	Reactor:	NHR-450 MWt
2.	Country:	China, People's Republic of
3.	Reactor supplier:	
4.	Type:	Pool-water
5.	Power:	450 MWt
6.	Core:	316 fuel assemblies with 96 rods each, 211 cm core height, ~ 39 880 kg UO2 load, 2.1%, 1.7%, 1.5%, 1.3% enrichment, ~ 28 kW/L average power density
7.	Reactor coolant circuit:	natural circulation, pressure 15 Kg/cm^2, core temperature outlet/inlet 198/158 ^{o}C, ~ 6 m pressure vessel diameter, ~ 14 m pressure vessel height
8.	Intermediate circuit:	pressure 17 kg/cm^2, temperature 150/110°C
9.	Heating system circuit:	temperature 130/70°C
10.	Safety:	Integrated arrangement, all main parts of the primary loop are contained in the pressure vessel. A containment outside the reactor pressure vessel. Natural circulation of the residual heat removal.
11.	Fuel cycle length:	
12.	Commercial status:	Commercial type, in design stage
13.	Remarks:	

x x x

REFERENCES

[1] INTERNATIONAL ATOMIC ENERGY AGENCY, Nuclear Power Reactors in the World, Reference Data Series No.2, IAEA, VIENNA April (1987)

[2] SHENG W., KUPITZ J., PONTIER R., "Trends in LWR Design and Technology", Advances in Light Water Reactor Technology, (Summary Report IAEA Technical Committee Meeting, Washington, D.C., USA, Nov. 1986) IAEA, Vienna (1986)5

[3] ROSS F.A., "The U.S. Department of Energy Advanced Light Water Reactor Program", ibid.,p.12

[4] PEDERSEN T., "PIUS LWR Design Progress", ibid., p.206

[5] HAYNS M.R., PHILLIPS D.W., "Safety Principles for Advanced Plant", Nuclear Power Performance and Safety (Proc. Conf. Vienna, 1987) IAEA-CN-48/210, IAEA, Vienna (1988)

[6] BURKLE W., BRAUN W., "Inherent Safety Features of Advanced Light Water Reactors", ibid., IAEA-CN-48/151

[7] WEINBERG A.M., SPIEWAK I., BARKENBUS J.N., LIVINGSTON R.S., PHUNG. D.L., The Second Nuclear Era, Institute for Energy Analysis, Oak Ridge Associated Universities, ORAU/IEA-84-6 (M) (1984)

[8] International cost comparison, Nucl. Energy, 26 1 Feb. (1987)7

[9] HIRSCHMANN H.A., Nuclear Power Plant Performance Objectives for the 1990's, ibid. [5], IAEA-CN-48/14

[10] ASAI N., Performance Improvement Measures and Their Implementation in Japan ibid., IAEA-CN-48/16

[11] DERRICKSON W.B., St. Lucie 2, A Nuclear Plant Built on Schedule in the United States, Lessons for the 1990's, ibid., IAEA-CN-48/284

[12] INTERNATIONAL ATOMIC ENERGY AGENCY, Potential of Low-Temperature Nuclear Heat Applications (Report of the Advisory Group Meeting, Wuerenlingen, Switzerland, 1985) IAEA-TECDOC-397, Vienna (1986)

[13] INTERNATIONAL ATOMIC ENERGY AGENCY, Low-Temperature Nuclear Heat Application: Nuclear Power Plants for District Heating (Report on the Advisory Group Meeting, Prague, 1986) IAEA-TECDOC-431, Vienna, 1987

[14] INTERNATIONAL ATOMIC ENERGY AGENCY, Nuclear Heat Application (Proc. of a Technical Committee Meeting and Workshop, Cracaw, Dec. 1983) IAEA, Vienna, 1984

[15] GARRIBBA S., SARLOS G., VIVANTE C. (Eds), Small and Medium-Sized Nuclear Reactors (Proc. of the First International Seminar, Lausanne, Switzerland, Aug. 1987) EPFL, Lausanne, 1987

[16] VUORENMAA A., Large planning effort pays off at Finland's Loviisa PWRs, Nucl. Eng. Int. 31 378 Jan. (1986)45

[17] Finland set to order more units this year, Nucl. Eng. Int. 31 382 May (1986)2

[18] Country-by-country review, Nucl. Eng. Int. 31 383 June (1986)47

[19] AALTO E., "Light Water Reactor Development in Finalnd", Summary Report Part II (First Meeting of the International Working Group on Advanced Technologies for Water Cooled Reactors, Vienna, 1987) IWGATWR/1-2 Vienna (1987)9

[20] NIGON J.L., Status of French R&D for Advanced Light Water Reactors, ibid., p.11

[21] DENNIELOU Y., La recherche et le développement sur les REP francais, ibid., p.19

[22] MILLOT J.P., "Framatome Studies on High Conversion Water Reactor Concept", Advanced Light and Heavy Water Reactors for Improved Fuel Utilization (Proc. of a Technical Committee and Workshop, Vienna, 1984) IAEA-TECDOC-344, Vienna (1985)43

[23] BRAUN W., KWU Advanced LWR Principles, Nucl. Eur. 4 (1986)17

[24] CHAWLA R., ERBACHER F.J., MOLDASCHL H., Achieving high conversion, Nucl. Eng. Int. 32 395 June (1987)62

[25] BURKLE W., GRUNER W., PUTSCHOEGL G., Milestones of Nuclear Devlopment in the Federal Republic of Germany, Carl Hanser Verlag, München (1987)

[26] OGURA S., TOYODA Y., SHIMADA S., IWAI S., "Development Strategy on Advanced and Future PWR", ibid. [22], p.21

[27] MITI Sets Out 3-Step Program on Use of Plutonium in Thermal Reactors, At. Jpn. 30 6 June (1986)5

[28] MITI Sets Guidelines for Sophistication of LWRs; Introduction of A-LWRs in 1990s and AA-LWRs by 2005, At. Jpn. 30 3 March (1986)4

[29] PEDERSEN T., "Swedish Activities on Advanced Technologies for Water Cooled Reactors" ibid. [19], p.29

[30] The letter from Mr. MARSHALL L., Chairman of CEGB to Mr. BLIX H., Director General of IAEA, 13 March 1987

[31] Technical Forum, Nucl. Eng. 27 4 July/August (1986)134

[32] Latest Five Year Plan Confirms Soviet Ambitions, Nucl. Eng. Int. 31 385 August (1986)25.

[33] DEVINE J.C., Electric Power Research Institute Advanced Light Water Reactor Programme, ibid. [2], p.32

[34] LANG P.M., "Review of Concepts to Improve Uranium Utilization in Light Water Reactors, with Emphasis on Nonbackfittable Options", ibid. [22], p.18

[35] EITEL G., "The Development of Nuclear Power in the CMEA Member Countries and its Safety", ibid. [5] IAEA-CN-48/6

[36] KONSTANTINOV L.V., SKJOELDEBRAND R., Summary Report on the IAEA Small and Medium Power Reactor Study (Proc. of the Fifth Pacific Basin Nuclear Conference, Seoul 1985)

[37] JIANG X.X., China's Basic Policy on Nuclear Energy Development, 19th JAIF Annual Conference Nuclear Industry: Evolutional Steps towards the 21st Century, At. Jpn. April (1986)

[38] BENNETT L.L., SKJOELDEBRAND R., "Promotion and Financing of Nuclear Power Programmes in Developing Countries", ibid.,[5] IAEA-CN-48/28

[39] BENNETT L.L., KONSTANTINOV L.V., SCHENK K.F., CHAR N.L., "The Role of Nuclear Energry in Developing Countries in the 1990s", ibid. [5] IAEA-CN-48/2

[40] HAN P.S., JUHN P.E. "The Role of Nuclear Power in the Development of Industry and Manpower", ibid. [5] IAEA-CN-48/9

[41] OUYANG Y., "Background and Experience with Qinshan Project in China" (IAEA General Conference 1985)

[42] JIANG Y.Q., YANG F.T., WANG S.S., "Preparing for Reprocessing of Spent Fuel from Nuclear Power Plants in China", ibid. [5] IAEA-CN-48/291

[43] BELLET J., "EDF Prospectives on Advances in Light Water Reactor Technology", ibid. [2], p.169

[44] MILLOT J.P., Framatome's Convertible Spectral Shift Reactor, Nucl. Eur. 4 (1986)23

[45] HITTNER D., MILLOT J.P., VALLEE A., Preliminary Results of the Feasibility Study on the Convertible Spectral Shift Reactor Concept, JPM/NTH ND/D 87-013, Framatome, Paris, France (1987)

[46] BERGERON J., et al., The French neutronic program to answer the requirements of the future PWRs, C.E.N. Cadarache MD/MFR S.E.N 87-038, C.E.N. Cadarache, France (1987)

[47] COURTAUD M., DERUAZ R., GROS D'AILLON L., The French Thermalhydraulic Program to Answer the Requirements of Future APWRs, G/SETH/87, C.E.N. Grenoble, France (1987)

[48] SCHOLTEN V., SEIDELBERGER H., "The German Convoy concept, expectations and achievements during project implementation", ibid. [5], IAEA-CN-48/136.

[49] ALEITE W., Providing Optimum Operating Information for PWRs, Nucl. Eng. Int. 32 394 May (1987)41

[50] MEYER P.J., "The KWU 1000 MW - PWR Design", ibid. [2] 60

[51] GRUN (Ed.), Load Following Capability of KWU Nuclear Power Plants with Pressurized Water Reactor, Kraftwerk Union AG, Feb. (1986)

[52] ALEITE W., JAN R.V., Germany Designs for Optimum Operating Flexibility, Nucl. Eng. Int. 30 377, Dec. (1985)28

[53] MOLDASCHL M., BROGLI R., KUCZERA B., Light Water High Converter Reactor - The LWR Technology of the late 90s, ibid. [5], IAEA-CN-48/124.

[54] MAERKL H., GOETZMANN C.A., MOLDASCHL H., KWU's High Conversion Reactor Concept - An Economical Evolution of Modern Pressurized Water Reactor Technology Towards Improved Uranium Ore Utilization, Nucl. Technol. 80 1 Jan. (1988)65

[55] HELLSTROEM B., LOENNERBERG B., TIREN I., The ABB-ATOM Advanced BWR is a Proven Design, - Key features of BWR 90-, ABB-ATOM, Västeras, Sweden (1987)

[56] Assessing Soviet Nuclear Technology - the case of Loviisa, Nucl. Eng. Int. 31 386 Sep. (1986)27

[57] Особенности Конструкции Реакторной Установки С ВВЭР, Лекция Подготовлена ОКБ "Гидропресс" на Основе Материалов Проектов Серийных Реакторных Установок ВВЭР-1000 (Проект В-320) и ВВЭР-440 (Проект В 213у)

[58] PONOMAREV-STEPNOJ N.N., PROTSENKO A.N., SLESAREV I.S., Safety Concept and Development of Nuclear Power Engineering, ibid. [19], p.38

[59] SPIEWAK I., Survey of Light Water Reactor Design to be Offered in the United States, Oak Ridge Natl. Lab. Rep., ORNL/TM-9948, March (1986)

[60] DAVIS G.A., Combustion Engineering's ALWR Plans for the 1990's, ibid. [2], p.135

[61] DAVIS G.A., FLYNN E.P., MATZIE R.A., TURK R.S., System 80 Plus™- Evolutionary Advancement to Meet Utility Needs, Combustion Engineering Inc. Windsor, USA (1987)

[62] TANAKA T., Development of Advanced Pressurized Water Reactor, At. Jpn. 30 7 July (1986)23

[63] MINEMATSU A., Outline of Advanced Boiling Water Reactor, At. Jpn. 30 7 July (1986)12

[64] Promising Future of LWRs (International Meeting on Further Improvement of LWR Technologies Session 1, Tokyo April 1986) At. Jpn. 30 4 April (1986)26

[65] GEORGE B.V., HILSLEY D.E., Britains approach to the PWR stresses safety and reliability, Nucl. Eng. Int. 27 335 Dec. (1982)34

[66] JENKINS P.D., HARRISON J.R., UK Trends in Safety Assessment, ibid. [5], IAEA-CN-48/279.

[67] Proof of Breeding in LWBR, WAPD-TM-1612, Sept. (1987)*

---

* Available from the National Technical Information Service, US Department of Commerce, 5285 Port Royal Road, Springfield, Virginia, USA 22151

[68] BELLE J., BERMAN R.M., (Eds), Thorium Dioxide: Properties and Nuclear Applications, Government Printing Office, Washington, D.C. Aug. (1984)

[69] Design of the Shippingport Light Water Breeder Reactor, WAPD-TM-1208, Jan. (1979)*

[70] Final Environmental Statement, Light Water Breeder Reactor Program, ERDA-1541 June (1976)*

[71] Three Core Concepts for Producing Uranium-233 in Commercial Pressurized Light Water Reactors for Possible Use in Water-Cooled Breeder Reactors, WAPD-TM-1310, Dec. (1979)*

[72] Design Concept for a 900 MW(e) Scaleup of the 60 MW(e) Shippingport LWBR, WAPD-TM-1380, Oct. (1982)*

[73] Design Concept of an Advanced Light Water Breeder Reactor Controlled with Movable Fuel, WAPD-TM-1534, Oct. (1982)*

[74] TAYLOR J.J., The Opportunity for Small Reactors, EPRI J. 11 5 July/Aug. (1986)2

[75] KULYNYCH G.E., BINGHAM B.E., Operational Aspects of Small Commercial Reactors, Trans. Am. Nucl. Soc., (US) 49 June (1985)364

[76] KUKKOLA T., Possible Finnish Alternative, ibid. [15], Vol. I

[77] KULYNYCH G.E., BABCOCK and WILCOX, Advanced Light Water Reactor Development, ibid. [2], p.151

[78] HARRIS R.P., LETENDRE R.P., CRUMP M.W., Physics and Safety Aspects of the Minimum Attention Plant, For Presentation at the ANS Topical Meeting on Advances in Reactor Physics and Safety, Saratoga Springs, New York, Sept. (1986)

[79] TURK R.S., MATZIE R.A., The Minimum Attention Plant Inherent Safety Through LWR Simplification, Paper for ASME Winter Annual Meeting, Anaheim, California, Dec. (1986)

[80] FLINN W.S., MATZIE R.A., SHAPIRO N.L., "A Realistic Alternative," Trans. Am. Nucl. Soc. 49 June (1985)362

[81] DUNCAN J.D., SBWR, A Simplified Boiling Water Reactor, For Presentation at the Tokai University International Nuclear Engineering Symposium, Nov. (1986)

[82] General Electric Company, Small and simplified BWR with passive safety systems looks promising, Nucl. Eng. Int. 32 395 June (1987)57

[83] HUANG R.L., PARADISO F.M., SAWYER C.D., CHOE H., Gravity-Driven Core Cooling System for a BWR, Trans. Am. Nucl. Soc. 53 Nov. (1986)308

[84] WOODSON N.D., Westinghouse Advanced Passive 600 MW(e) PWR Design, Tokai University Seminar, Nov. (1986)

---

* Available from the National Technical Information Service, US Department of Commerce, 5285 Port Royal Road, Springfield, Virginia, USA 22151

[85] TOWER S.N., SCHULZ T.L., VIJUK R.P., Passive and Simplified System Features for the Advanced Westinghouse 600 MWe PWR, ibid. [15], Vol. I

[86] BRAUN H.E., TOWER S.N., NUPACK (Nuclear Package): Major Module Solves "All" Construction Roadblocks (Westinghouse), ibid. [80]

[87] HANNERZ K., Applying PIUS to Power Generation: the Secure - P LWR, Nucl. Eng. Int. 28 349 Dec. (1983)41

[88] BABALA D., HANNERZ K., Pressurized Water Reactor Inherent core Protection by Primary System Thermohydraulics, Nuc. Sci. Eng. 90 (1985)400

[89] SUNDQVIST C., PEDERSEN T., PIUS, the forgiving reactor, Mod. Power Syst. 5 Oct. (1985)69

[90] HANNERZ K., the PIUS PWR, ABB-ATOM, Västeras, Sweden (1987)

[91] ODA J., A Concepture Design of Intrinsically Safe and Economical Reactor (ISER) ibid. [2], p.244

[92] FORSBERG C.W., A Process Inherent Ultimate Safety Boiling Water Reactor, Nucl. Technol. 72, Feb. (1986)121

[93] FORSBERG C.W., "Passive Emergency Cooling Systems for Boiling Water Reactors (PECOS-BWR), Nucl. Technol. 76 Jan. (1987)185

LIST OF CONSULTANTS

FRANCE

Mr. M. DENNIELOU
EDF - Direction de l'équipement
SCE études et projects
thermiques et nucléaires
12-14 avenue Dutrievoz
F-69628 Villeurbanne Cedex
Tel.: 78 94 48 10
Telex: EDFEP 305323 F

Mr. J.L. Nigon
Chef du service des coeurs et
systèmes au département des réacteurs à eau
Centre d'études nucléaires de Cadarache
B.P. No. 1
F-13115 St. Paul lez Durance
Tel.: 42254560

FEDERAL REPUBLIC OF GERMANY

Mr. P.-J. MEYER
Siemens AG, Group KWU
Department U 5212
Hammerbacherstrasse 12 + 14
P.O. Box 3220
D-8520 Erlangen
Tel.: 09131-18 2127
Telex: 62929-0

JAPAN

Mr. Toshiro MIWA
Director
Nuclear Power Engineering Test Center
Shuwa-Kamiyacho Bldg. 3-13
4-Chome, 3-6-2 Toranomon
Minato-ku, Tokyo 105
Tel.: 03-434-2450
Facsimile: 03-434-6786

Mr. W. Mizumachi
Manager
Plant & System Planning Department
Nuclear Energy Division
Toshiba Corporation
8, Shinsugita Isogo-ku
Yokohama 135
Tel.: (045) 756-2384
Telex j 22587

SWEDEN

Mr. Tor PEDERSEN
Reaktordivisionen
ABB ATOM AB
S-721 63 Västeras
Tel.: 021/10 70 00
Telex: 40629 ATOMVA S
Facsimile: 021-189471

USSR

Mr. V.T. FEDEROV
First Deputy of Chief Designer
Experimental Design Bureau
"Hydropress"
142100 Podolsk, Moscow District

Mr. V.A. Voznesenskii
I.V. Kurchatov Institute
of Atomic Energy
I.V. Kurchatov Sg., 46
123098 Moscow
Telex: 411888 MEZON SU

USA

Mr. P. LANG
ME-42
Office of Nuclear Energy
U.S. Department of Energy
Washington, DC 20545
Tel.: (301) 353-3313
Telex: 710-8280475
Facsimile: 353-3870/verify 353-3486

SECRETARIAT

Mr. J. Kupitz
Mrs. SHENG, Weilan
Nuclear Power Technology Development
Division of Nuclear Power
IAEA, Vienna

HOW TO ORDER IAEA PUBLICATIONS

An exclusive sales agent for IAEA publications, to whom all orders and inquiries should be addressed, has been appointed in the following country:

UNITED STATES OF AMERICA	UNIPUB, 4611-F Assembly Drive, Lanham, MD 20706-4391

In the following countries IAEA publications may be purchased from the sales agents or booksellers listed or through major local booksellers. Payment can be made in local currency or with UNESCO coupons.

ARGENTINA	Comisión Nacional de Energía Atómica, Avenida del Libertador 8250, RA-1429 Buenos Aires
AUSTRALIA	Hunter Publications, 58 A Gipps Street, Collingwood, Victoria 3066
BELGIUM	Service Courrier UNESCO, 202, Avenue du Roi, B-1060 Brussels
CHILE	Comisión Chilena de Energía Nuclear, Venta de Publicaciones, Amunategui 95, Casilla 188-D, Santiago
CHINA	IAEA Publications in Chinese: China Nuclear Energy Industry Corporation, Translation Section, P.O. Box 2103, Beijing IAEA Publications other than in Chinese: China National Publications Import & Export Corporation, Deutsche Abteilung, P.O. Box 88, Beijing
CZECHOSLOVAKIA	S.N.T.L., Mikulandska 4, CS-116 86 Prague 1 Alfa, Publishers, Hurbanovo námestie 3, CS-815 89 Bratislava
FRANCE	Office International de Documentation et Librairie, 48, rue Gay-Lussac, F-75240 Paris Cedex 05
HUNGARY	Kultura, Hungarian Foreign Trading Company, P.O. Box 149, H-1389 Budapest 62
INDIA	Oxford Book and Stationery Co., 17, Park Street, Calcutta-700 016 Oxford Book and Stationery Co., Scindia House, New Delhi-110 001
ISRAEL	Heiliger & Co. Ltd. 23 Keren Hayesod Street, Jerusalem 94188
ITALY	Libreria Scientifica, Dott. Lucio de Biasio "aeiou", Via Meravigli 16, I-20123 Milan
JAPAN	Maruzen Company, Ltd, P.O. Box 5050, 100-31 Tokyo International
PAKISTAN	Mirza Book Agency, 65, Shahrah Quaid-e-Azam, P.O. Box 729, Lahore 3
POLAND	Ars Polona-Ruch, Centrala Handlu Zagranicznego, Krakowskie Przedmiescie 7, PL-00-068 Warsaw
ROMANIA	Ilexim, P O. Box 136-137, Bucharest
SOUTH AFRICA	Van Schaik Bookstore (Pty) Ltd, P.O. Box 724, Pretoria 0001
SPAIN	Díaz de Santos, Lagasca 95, E-28006 Madrid Díaz de Santos, Balmes 417, E-08022 Barcelona
SWEDEN	AB Fritzes Kungl. Hovbokhandel, Fredsgatan 2, P.O. Box 16356, S-103 27 Stockholm
UNITED KINGDOM	Her Majesty's Stationery Office, Publications Centre, Agency Section, 51 Nine Elms Lane, London SW8 5DR
USSR	Mezhdunarodnaya Kniga, Smolenskaya-Sennaya 32-34, Moscow G-200
YUGOSLAVIA	Jugoslovenska Knjiga, Terazije 27, P.O. Box 36, YU-11001 Belgrade

---

Orders from countries where sales agents have not yet been appointed and requests for information should be addressed directly to:

Division of Publications
International Atomic Energy Agency
Wagramerstrasse 5, P.O. Box 100, A-1400 Vienna, Austria